Zero Energy Home

EDSGN 100

Section 002

3/7/2014

Submitted to: Bevin Etienne

TEAM TBD

TABLE OF CONTENT

Team Page **3**

Abstract **4**

Introduction **4**

Mission Statement **4**

Customer Need Assessment **5**

External research **5**

-preliminary research

-Benchmarking

-product dissection

-global marketplace

Concept generation **9**

Concept Selection **9**

Final Design Description **9**

Conclusion **13**

Reference **14**

TBD

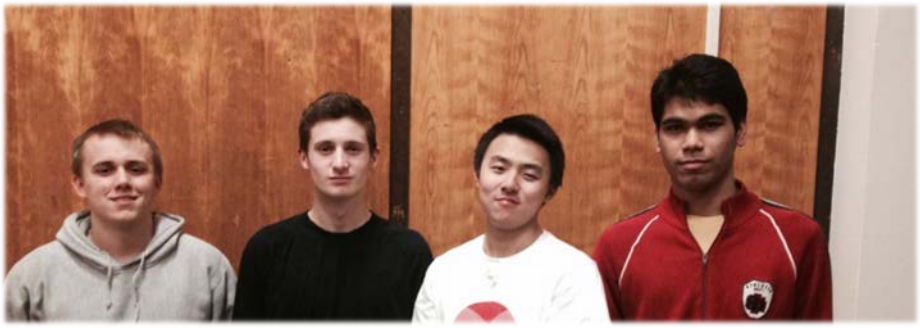

Kevin Gibbons

krg5250@psu.edu

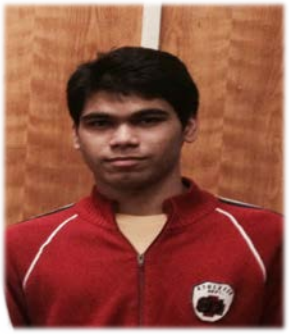

Atul Bhonsle

azb5616@psu.edu

Robert Anthony

rpa5068@psu.edu

Zhenyang Li

zwl5167@psu.edu

ABSTRACT

The objective of this project was to design a zero energy home based on specific requirements of the targeted family. Common home designs are extremely inefficient and wasteful, and would ultimately not adhere to the specific needs of this family. We designed the house to specifically meet the various requirements that the family had, while still maintaining energy efficiency. Through extensive research and collaboration we were able to create a model of a house that will meet the needs of the family.

INTRODUCTION

The problem that our team was faced with solving was to create a house that met the various needs of a family who planned to move out of their current house. The family of four included a son who had specific air quality needs due to his asthma. The house needed to be a sufficient size to hold the family of four, and needed to truly be a zero energy home. All of these requirements needed to be met without exceeding the price limit of $160,000. As a team, we brainstormed various possibilities regarding the design of the house until we decided on specific aspects the house would have. We then took those aspects we agreed on, and extensively researched the logistics of implementing them. Much of or external research was in the form of benchmarking. This research allowed our team to finalize our ideas and implement them into the final design of the house. Throughout the report you will find further explanation of the final design and features of the house through charts, tables, and pictures.

MISSION STATEMENT

The purpose of this project is to design a zero energy home that fit the specific needs of a family that plans to live in the home. Our team decided to focus on creating an energy efficient house at as low of a price as possible in order to meet the consumers requirements.

CUSTOMER NEEDS ASSESMENT

Customer Needs	Needs Statement
House needs to be zero energy	The net energy consumption of the house will be zero
Must look good	The house will have a visually pleasing design
Must be spacious enough	The house will be no less than 1000 square feet
The house must be built in Pennsylvania	The house will be built in Harrisburg Pennsylvania
Must be affordable	Total cost of the house will be around $160,000
Must meet child's asthma needs	The house will have an air filtration system

We used the customer needs statement in order to set the initial parameters for the design of our zero-energy home. The design was modeled off of need statements that we created from the customer's needs.

EXTERNAL RESEARCH

PRELIMINARY RESEARCH

In order to accurately fulfill the needs of the customer, we needed to do some preliminary research of zero energy homes. Through our extensive research, we found that zero energy homes do not operate without energy all together; rather the net energy usage is zero. We also found that often times zero energy homes produce more energy than they consume which allows them to turn a profit with the electric companies. By fully understanding the concept of a zero energy home, we were able to better design our version of the home.

BENCHMARKING

Net Zero Energy is quickly becoming a sought after goal for many buildings around the globe - each relies on exceptional energy conservation and then on-site renewables to meet all of its heating, cooling and electricity needs. Yet the true performance of many developments is overstated – and actual Net Zero Energy buildings are still rare. A very important part of the research process for our group was benchmarking. We researched various homes that were zero energy, looking for any possible characteristics that we could use in our own home. We found that most zero energy homes exhibited similar traits. For instance, many of the homes had a very spacious layout. The research also showed that most of the houses were using some form of solar energy as the main source of energy. On the other end of the spectrum, we noticed that some homes relied more on passive forms of conserving energy rather than producing it. In particularly we selected *two homes* to analyze:

HOME #1

Location: Cupertino, California

Heating/Cooling: Air source heat pump

Characteristics: Made of plastic foam, slanted roof, and photovoltaic system.

The roof is covered in a 13.4 kW solar photovoltaic system that the architect says is "sized to cover all the energy use in the house.

The house is built primarily of plastic foam, with insulated concrete forms below grade, and structural insulated panels above

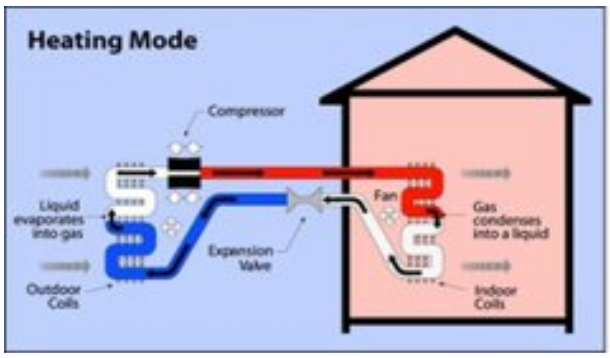

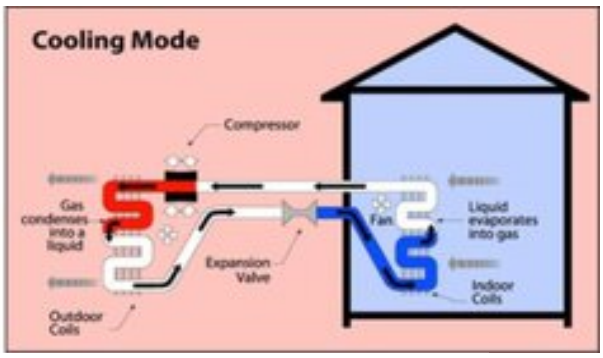

Traditional furnaces and air conditioners burn relatively large amounts of energy in order to create or remove heat, respectively. Instead of trying to directly create or remove heat, a heat pump uses a relatively small amount of energy to simply move (or pump) heat from one place to another.

HOME #2

Location: New Paltz, NY

Heating/Cooling: Geothermal

Characteristics: Uses photovoltaic systems, insulating foam, 2,000 square feet.

These work by harnessing the earth's heat. It keeps the house comfortable and warm without causing any kind of harm to the environment as the traditional methods did. During the warmer days of the year, the earth accumulates heat through

absorption that remains there even during the colder periods. The heat absorbed by the earth is more than 500 times than that we can use.

PRODUCT DISSECTION

Each of the aspects that our team decided on was then taken and dissected. We wanted to implement the aspects of each house that we felt was the most efficient, while still maintaining a low cost. Things such as, solar energy, open floor layout, and geothermal heating especially interested our group. We sat down as a team and discussed our views on each of the aspects and the benefits that came with each. We also did various other aspects of the houses we benchmarked off of in order to find the defining aspects of each house that makes it net zero energy.

GLOBAL MARKETPLACE

Due to the current economy, maintaining zero energy and low costs can be a very appealing thing for various consumers. In this case, the consuming family is not in a great place financially, so keeping the house at a low cost was paramount. Although the house needs to be low cost to account for the poor economy, it still needs to meet the standard of living. The target family, in this case, has specific needs for living that needed to be met. These specific needs needed to be met while keeping the price of the house at a price that fits the global marketplace.

CONCEPT GENERATION

Our group conducted a brainstorming session in which we sat down together and came up with possible ideas to use in the design of our house. Here is a list of the initial ideas:

- Open floor layout
- 2 floors
- Solar energy
- Wind energy
- Geothermal heating
- Hydro energy
- Located in southeastern Pennsylvania
- Most energy efficient appliances
- Slanted roof

- Domed roof
- Wood siding
- Lofted 2nd floor
- Solar tubes
- LED lights
- Windows

Our group recognized that logistically, we could not possibly implement each concept into our house. With that said, the concept generation portion of the design process is especially important because it allows the group to choose from various options that they feel fit into their requirements.

CONCEPT SELECTION

With the list of ideas that our group had come up with, we went through a scoring process that ranked the necessity of the aspects stated in the concept generation section. The ideas that were finally selected were:

- Open floor layout
- 1.5 floor lofted house
- Slanted roof
- Solar Panels
- Windows
- Solar tubes
- Energy efficient appliances
- Geothermal heating
- Located in Harrisburg, Pennsylvania
- LED lights

The listed ideas were selected to be in the final design of our zero energy homes. Our team felt as though these aspects were the most crucial in creating a house that has net zero energy, but also complies with the cost requirements the customer stated.

EMBODIMENT DESIGN AND FINAL DESIGN DESCRIPTION

The final design that our group decided on was a combination of the features we felt fit the customer needs assessment. Our group decided that the layout of the house should **be opened in order to increase air flow and decrease costs of heating and cooling**. The loft seemed to be the most fitting answer to increasing the openness of the house. **The slanted part of the roof was selected to face south** in order to increase the amount of time the sun hit the solar panels. We used the design of many of the houses that we benchmarked off of to decide on **geothermal energy**. We noticed that many of the zero energy homes had that feature in common, and felt that it would fit nicely with our house. The appliances were selected to be the most efficient on the market. We made sure all appliances met the zero energy requirements by researching them online. We **chose LED lights** and **solar tubes** to be the main source of light for our home. LED lights were chosen specifically because of the greater efficiency they had over normal lights. Overall, the design of the house was chosen by conducting **extensive external** research as well as **internal collaboration** to implement the features our team felt most important for a house to be zero energy.

3D MODEL

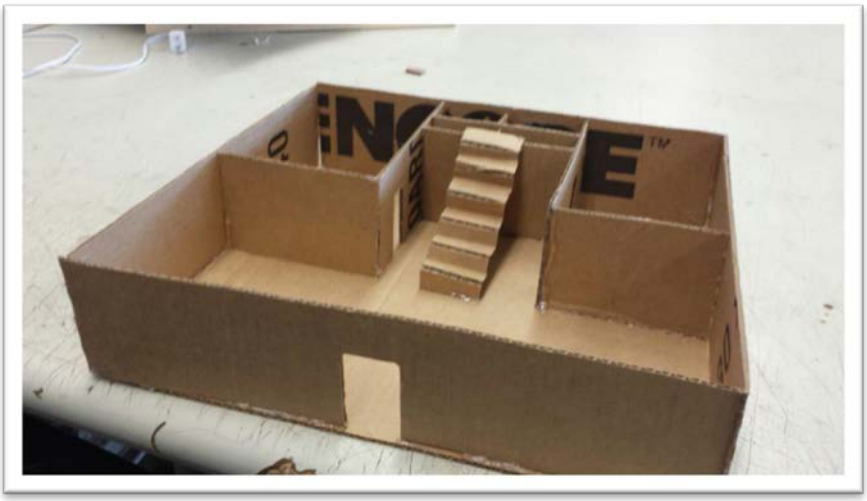

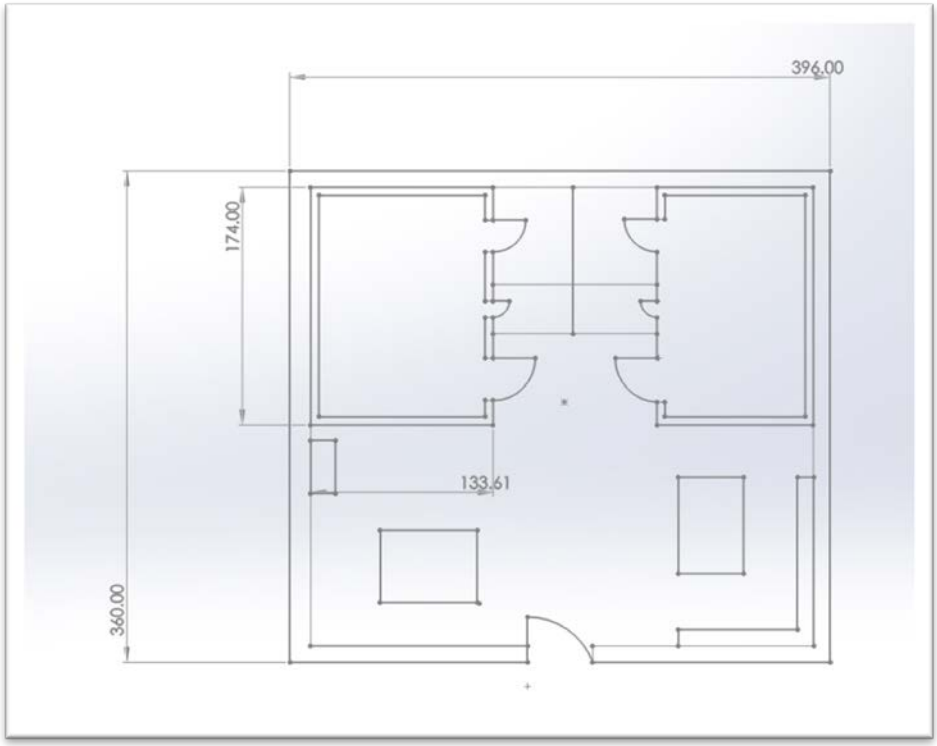

FIRST FLOOR LAYOUT

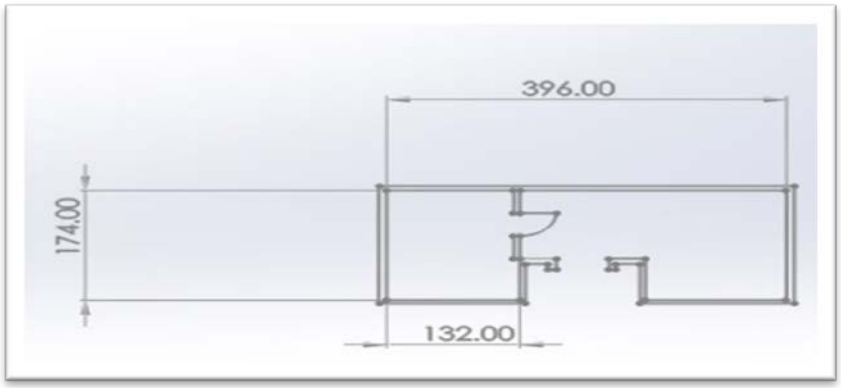

SECOND FLOOR LAYOUT

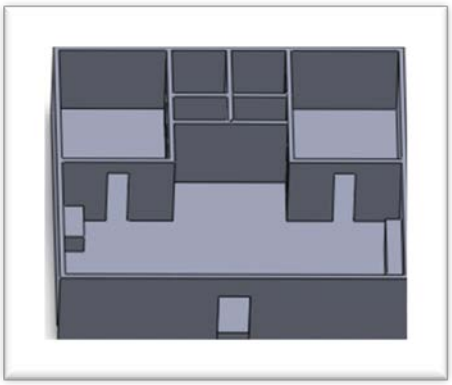

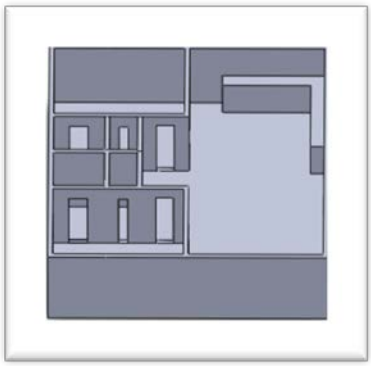

FIRST FLOOR VIEW

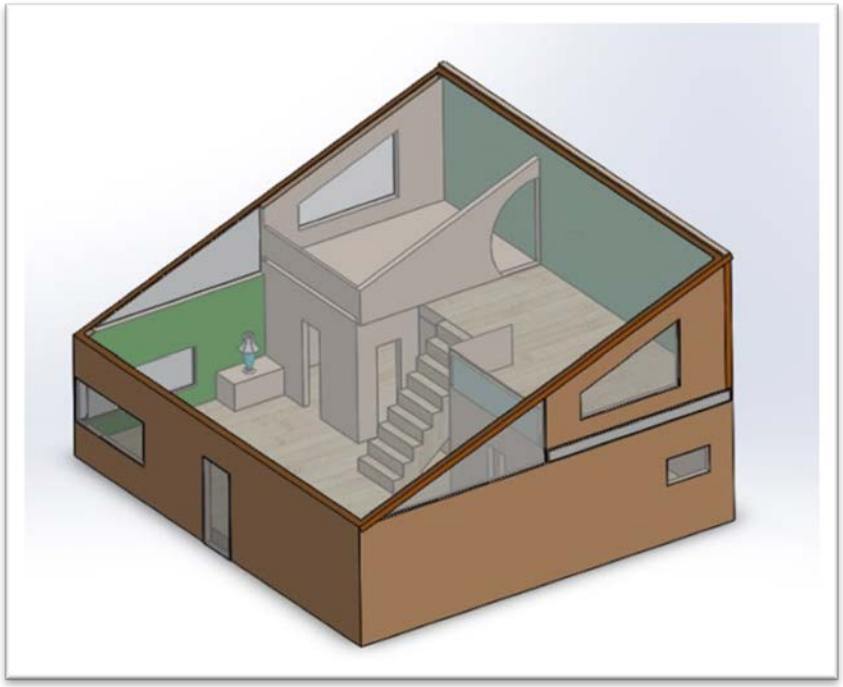

FINAL FEATURE

COMMERCIAL FEATURE

CONCLUSIONS

The final design ended up being a success as it fit the needs of the customer, while still maintaining the cost requirements. The lofted design of the house allows for an extra floor without impeding the open floor layout. Although the house is considered a net zero energy home, it is important to note that for the home to live up to these standards the occupants must change their lifestyle in order to improve efficiency. The family will need to live a more energy efficient life in order to successfully meet the requirements for a house to be net zero energy. Overall, the house will appease the target customers and will act as an example for engineers in future designing projects.

REFERENCES

- https://www.eventbrite.com/e/net-zero-energy-series-tickets-9802322009
- http://brightbuilthome.com/
- http://www.zeroenergy.com/
- https://steamwebserver.com/~zeronrgp/press-2011-04-23-seattles-first-zero-energy-house.php
- http://www.mech.utah.edu/~rusmeeha/references/Writing.pdf
- http://zeroenergyintelligence.com/