Personal CAD Project Summary – Motorcycle Shock

The motorcycle shock that I created in Solidworks for the personal CAD project is a reproduction of an existing shock made by RFY Motorsports. I chose to create this product in Solidworks because it is a product that I have been looking to purchase to replace the current shock absorbers on my motorcycle, and I always found these particular shocks to be rather elegant and intriguing in their design.

Figure 1: RFY Motorcycle Shock

Figure 2: RFY Motorcycle Shock pair

Source 1 (Left): http://img.dxcdn.com/productimages/sku_170589_1.jpg

Source 2 (Right): http://i01.i.aliimg.com/wsphoto/v0/1903161917_1/High-Guality-New-One-Set-font-b-12-5-b-font-320mm-RFY-font-b-Motorcycle.jpg

I knew that the object would present me with some challenges in its modeling, which is something that I was looking for in a possible project. The most difficult part of the entire project was trying to recreate the object as close to real life as possible without having any real dimensions on it other than eye-to-eye length and spring diameter. I had to create all of the parts based off of just “eye balling” the pictures I found of the product, as well as making some on screen measurements with a ruler to find approximate ratios of some different part sizes to each other.

This shock relates to my major of mechanical engineering because power sports and motorsports performance is the field that I would like to work in after attaining a degree in my major, and I would be working with parts like these rather commonly. It also pertains to my hobbies of custom motorcycle building and riding, which are passions that I have. Below are before and after pictures of the motorcycle build that I did from April-September 2014; all of the work was done myself including all of the custom fabrication and engine rebuilding and tuning, leaving only the fuel tank paint to a professional. The shocks would be used on this motorcycle.

Figure 3: KZ750 before build

Figure 4: KZ750 completed Café Racer build

Figure 5 (below): Solidworks model of shock

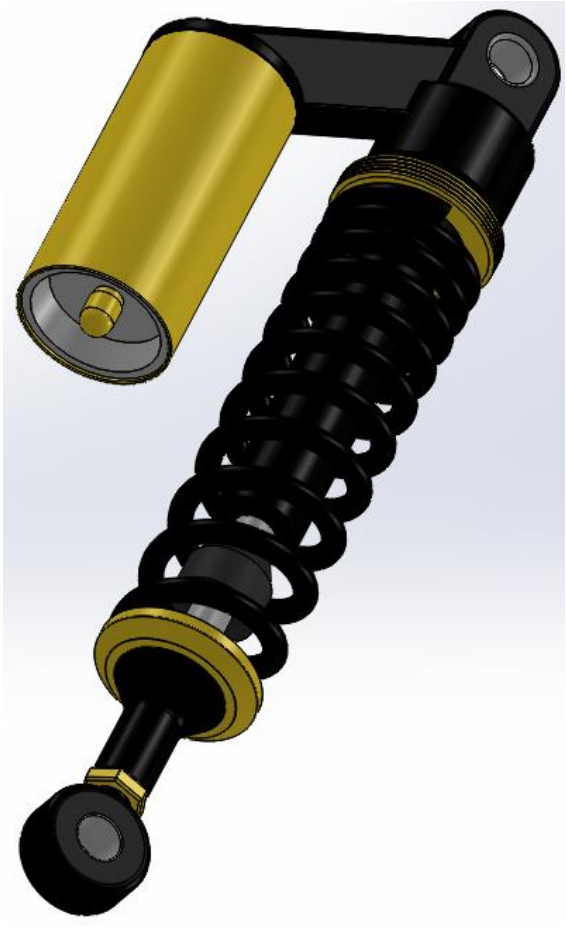

Figure 6 (below): Solidworks model of shock

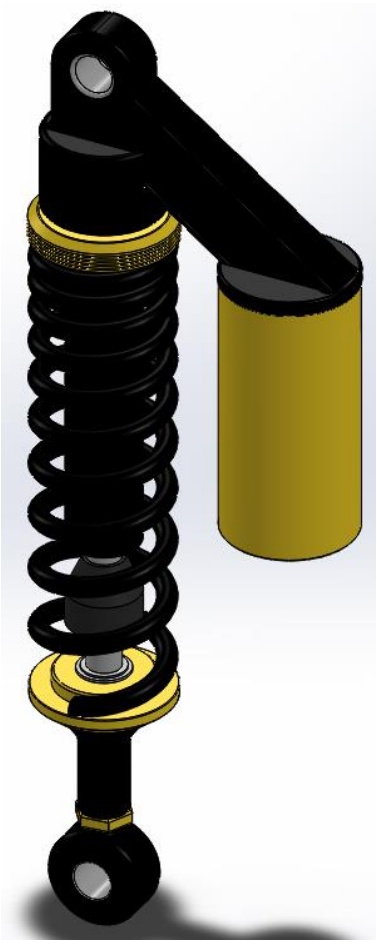

I learned that it is possible to reproduce any object in Solidworks if you have the will to do it, and that reading online information sources such as forums can be a very good way to obtain new knowledge and answer questions about how to make certain things in the program and find new design tools and features. For example, I thought that it would be extremely difficult to make the spring for the shock assembly, but with some online research I was able to find a forum post detailing all about how to make a spring in Solidworks, including how to create it with the varying spring rate that the spring on this shock has. I thoroughly enjoyed doing this project, as I got to recreate an object that I find to be very interesting and a very beautiful piece of engineering art.
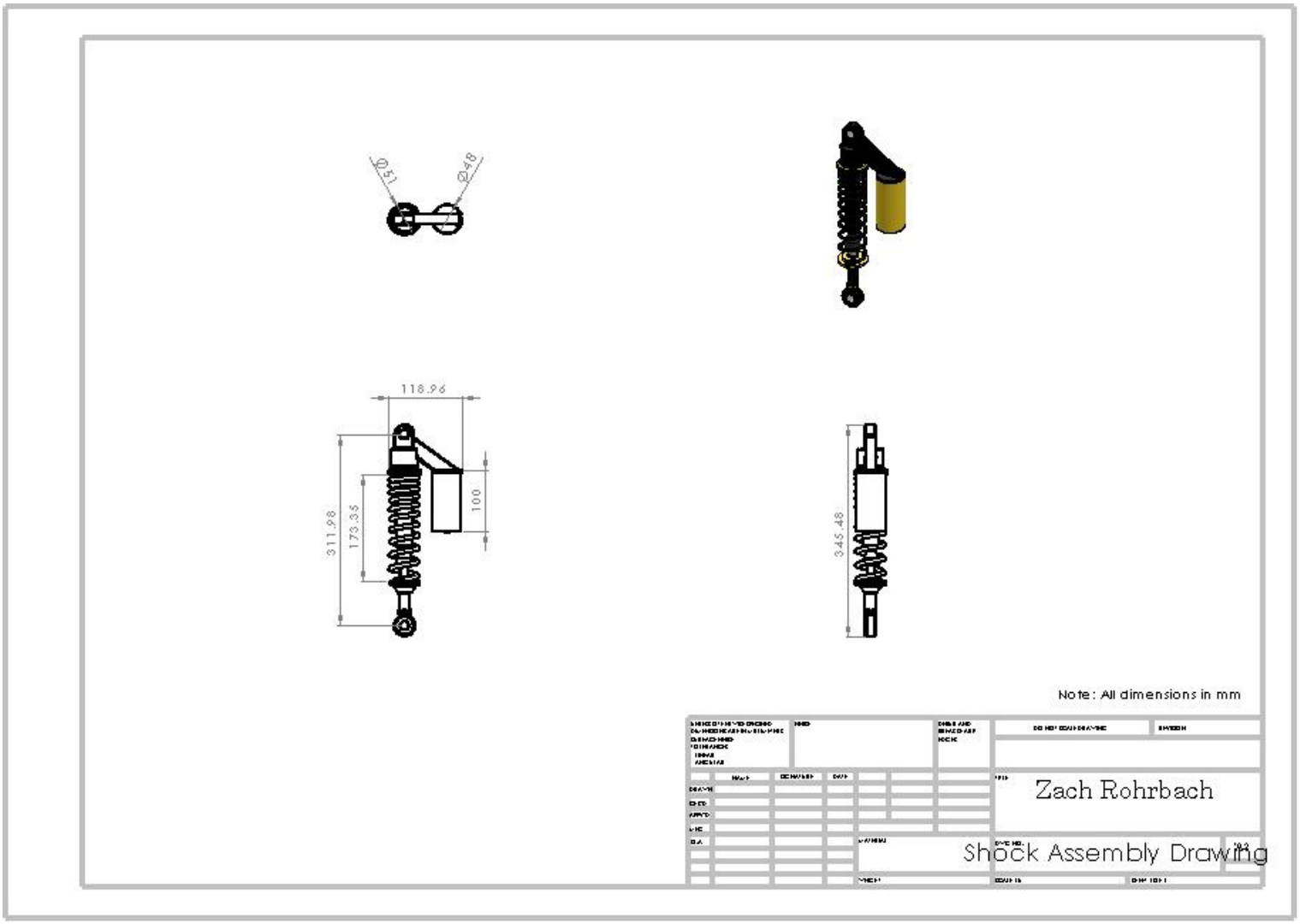
Figure 7: Solidworks Assembly Drawing of shock with overall dimensions