Dumpling Maker Project

EDSGN 100 Section 010 Team 5

Submitted by:

Joshua Rosato: http://www.personal.psu.edu/jpr5469/Webpage.html
Po-Ying Chiang: http://www.personal.psu.edu/pxc5222/EDSGN100/Po-yingChiang.html
Zhenda Li: http://www.personal.psu.edu/zql5239/
Krishna Shankar: http://www.persona.psu.edu/kxs5691/

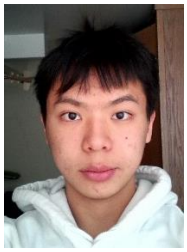

Submitted to:

http://www.personal.psu.edu/jpr5469/Webpage.html

Submitted on:

March 21st, 2016

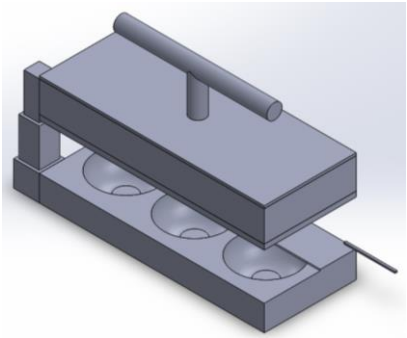

Table of Contents

Title:	Page Number:
Abstract/ Introduction . . .	1
Description of Design Task . . .	2
• Mission Statement	
• Problem Statement	
• Design Specifications	
Design Approach . . .	3-6
• Gantt Chart	
• Customer Needs Assessment	
• Concept Generation	
• Deign Matrix	
Final Design and Prototype . . .	7-9
• Working Drawings of Final Design	
• Prototype images	
• Design Features	
• Operation Instructions	
Engineering Analysis . . .	10
Conclusion . . .	11

(Josh Rosato)

Abstract

The purpose of this entire project was to find an applicable solution to a real world problem. A small group of students was required to design an automatic or semi-automatic dumpling maker for restaurant production purposes. With limited resources and time, our group had to come up with an innovative design that would fit the criteria and constraints. We developed a simple yet efficient design that could be very beneficial to employees in Chinese restaurants all over the world. (Josh Rosato)

Introduction

Our group has the task to design and build a prototype of a dumpling maker that would be suitable for use in a restaurant environment. The design had to meet the proper stipulations but still had to be creative and innovative. We followed the design process in order to conceptualize ideas for the final project. We talked among our group about different parts, mechanisms, and materials until we came up with complete designs. Each group member contributed a unique process or idea to the final design. After careful consideration of about 5 different designs, we selected the best drawing to execute. We believe that the selection was simple, efficient, and meet the specifications. (Josh Rosato)

Description of the Design Task

Problem Statement: Restaurants are unable to supply enough dumplings to keep up with the demand from their customers. Employees spend countless hours perfecting these small dumplings which takes time away from other duties and responsibilities in the restaurant.

Mission Statement: Our goal is to create an efficient and cost-effective dumpling maker that would save many Chinese restaurants time and money.

Design Specifications:

- Must be automatic or semi-automatic
- Should produce at least 10 dumplings per minute
- It should cost no more than $200
- It should be safe to use, easy to maintain, and dishwasher safe

(Josh Rosato)

Design Approach

Project Management:

Dumpling Maker Team #5			DURATION (days)
START DATE	END DATE	DESCRIPTION	
1/15/16	1/23/16	Target Specifications	8
1/23/16	1/30/16	Gathering Information	7
2/1/16	2/8/16	Brianstorming	7
2/8/16	2/15/16	Design Matrix	7
2/15/16	2/22/16	Design Drawings	7
2/22/16	2/29/16	Prototype Construction	7
2/29/16	3/7/16	Design Evaluation	7
2/26/16	3/19/16	Testing and Project Report	23
3/7/16	3/14/16	Oral Presentation	7

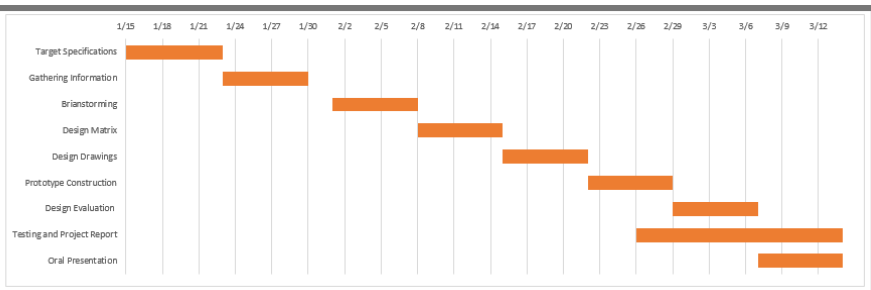

(Zhenda Li)

Customer Needs Assessment: Our group contacted 8 different Chinese restaurants throughout the United States and spoke with the manager or owner. We asked them four questions over a phone interview and received very similar answers from each establishment.

-Would you like a dumpling maker to help speed up production?

All of the managers agreed that it would step up production if the design was executed properly but it may take away from the quality of the dumplings.

-What size would be acceptable for a dumpling maker?

There is a lot of equipment found in a restaurant kitchen and there is usually limited space. All of the restaurants agreed that it should not be larger than a 12 inch by 8 inch by 12 inch box. Any bigger would just take up too much room in the kitchen.

-How much would you be willing to pay for a dumpling maker?

The restaurants were willing to pay about $150 for a durable and efficient dumpling maker. If it was any more expensive, it would cut into their profits which would not be ideal.

-Can you make dumplings faster by hand?

Only one restaurant argued that they had an employee that could about 5 dumplings per minute. The others claimed that they could only make 1 or 2 good dumplings per minute.

(Zhenda Li)

Concept Generation:

We separated the design into four different processes that needed to be accomplished. First, we had to create a process for making the dough. Next, we had to make a contraption that could cut the dough into circular pieces. Then, we had to develop a mechanism that would dispense the filling into the dough. Finally, we needed to seal the dumplings by folding the dough. These were the highlighted points that we had to address. Each member created 3 different designs for each part and then we collectively brought them together into one cohesive design. (Krishna Shankar)

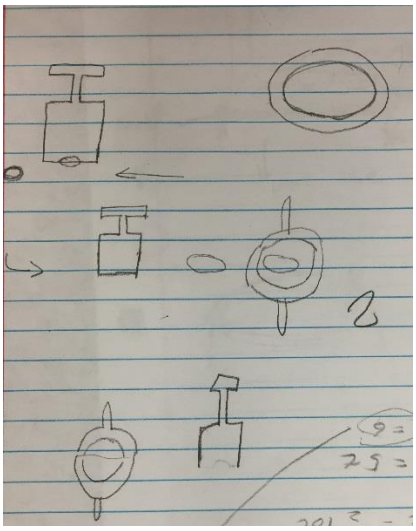

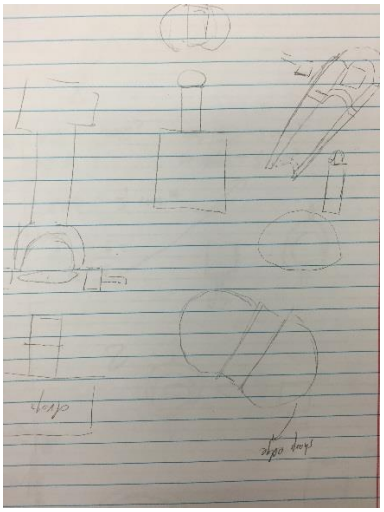

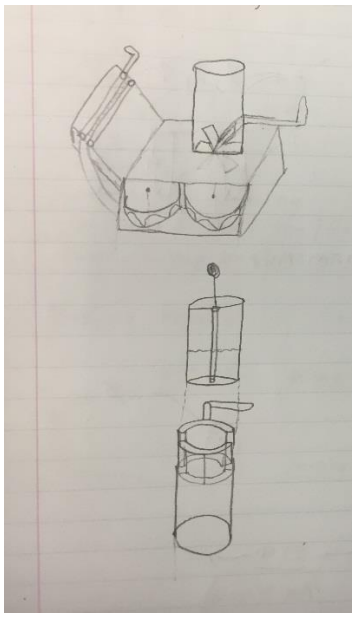

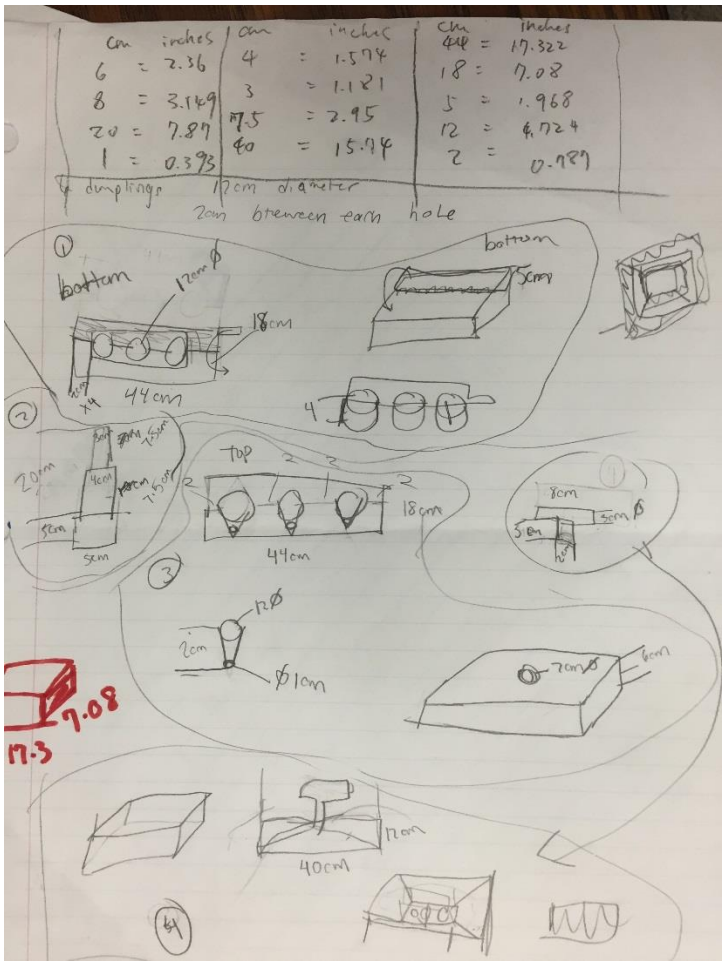
cm inches
6 = 2.36
8 = 3.149
20 = 7.87
1 = 0.393
cm inches
4 = 1.574
3 = 1.181
7.5 = 2.95
40 = 15.74
cm inches
44 = 17.322
18 = 7.08
5 = 1.968
12 = 4.724
2 = 0.787
dumplings 12cm diameter
2cm between earn hole
bottom
12cm ø
18cm
44cm
5cm
top
18cm
44cm
8cm
5cm ø
12ø
2cm
ø1cm
7cm ø
6cm
7.08
17.3
12cm
40cm

Design Selection Matrix:

Selection Criteria								
		A(Presser)		B(U-shape)		C(Crank)		D(Spinner)	
	Weight(%)	Rating	Weighted Score	Rating	Weighted Score	Rating	Weighted Score	Rating	Weighted Score
Efficiency	35	30		15		20		10	
Cost	30	$100		$60		$120		$50	
Durability(years)	13	5		6		5		3	
Ease of manufacture	10	3		2		2		4	
Size/shape	7	4		2		3		4	
Ease of use	5	4		3		4		4	
	Weight(%)	A(Presser)		B(U-shape)		C(Crank)		D(Spinner)	
efficiency	0.35	4		2		2.66666		1.222223	
cost	0.3	4		1.81		3.63		1.5	
durability	0.13	2		3.15		2.63		1.58	
Ease of manufacture	0.1	3		2		2		4	
Size/shape	0.7	4		2		3		4	
Ease of use	0.5	4		3		4		4	
Total score	1	7.96		4.7525		6.66423		6.28317805	

(Zhenda Li)

Final Design and Prototype

FIG. 1

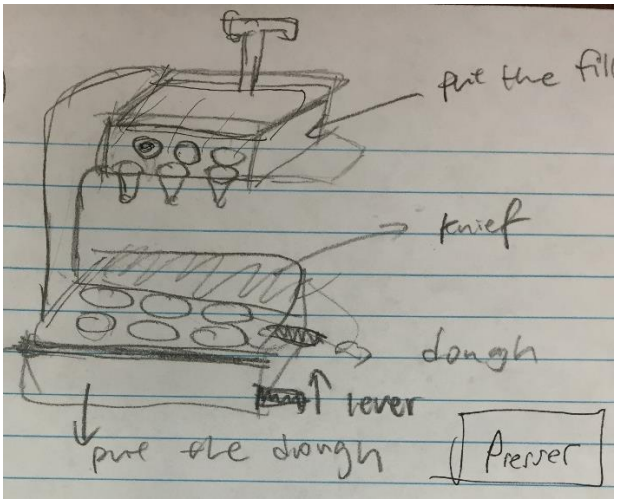

FIG. 2

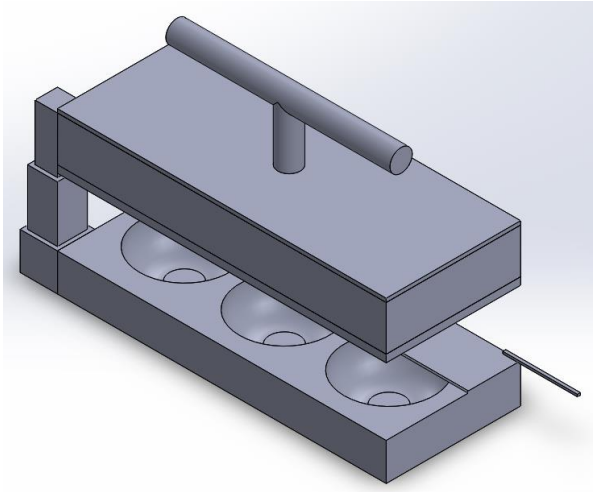

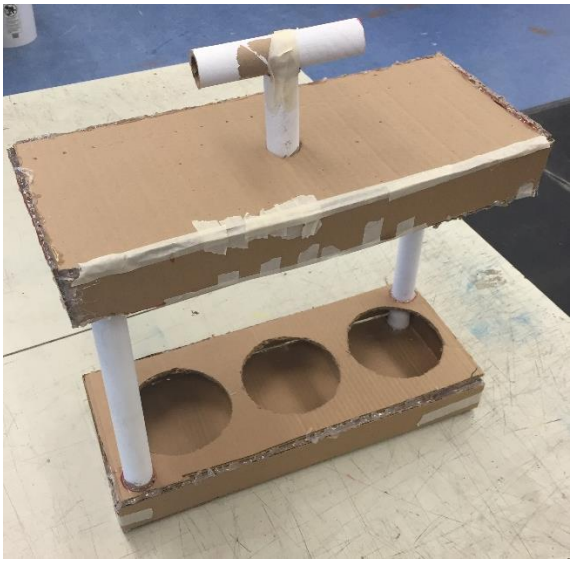

FIG. 3

FIG. 4

Figure 1: Rough sketch of final design

Figure 2: CAD model of final design

Figure 3 and 4: Image of physical prototype

(Zhenda Li)

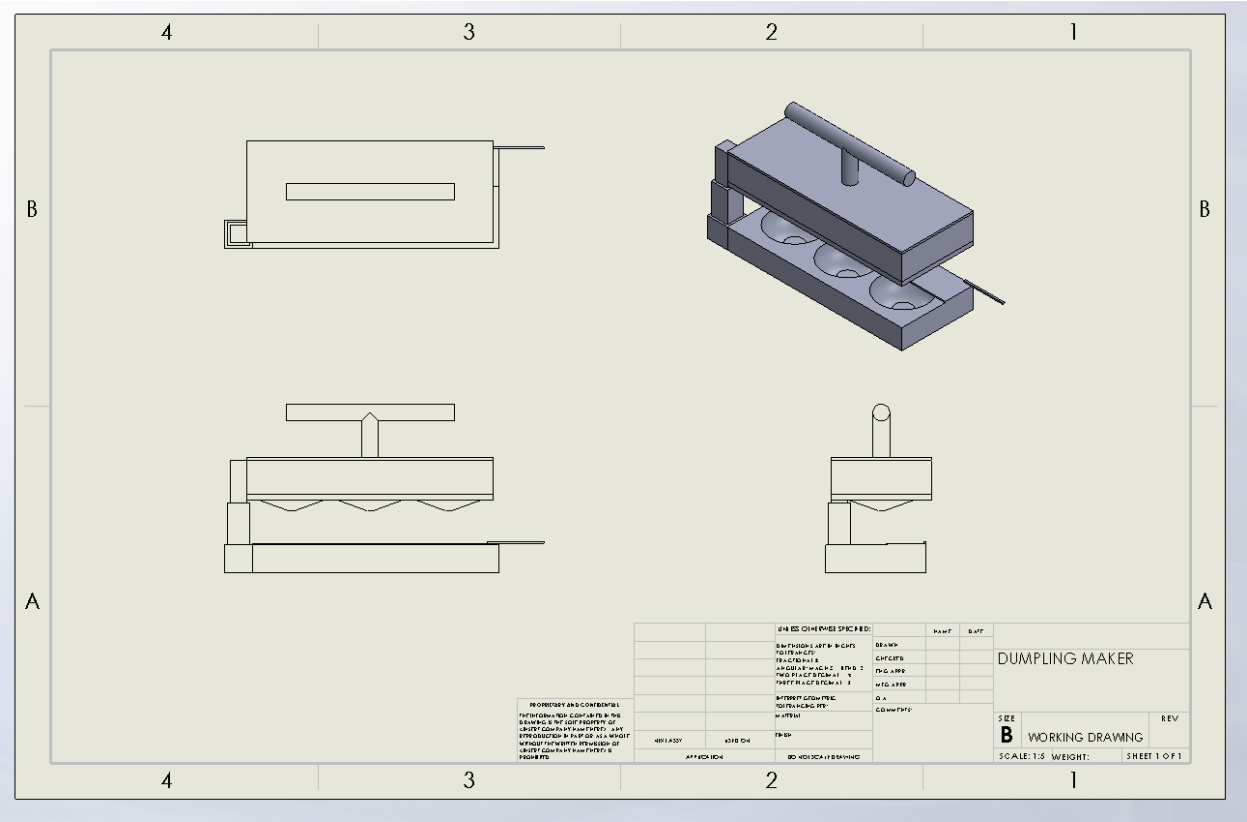

(Zhenda Li)

Design Features:

Our design features were fairly simple so that the operator could use the device with ease. The base had three half circles so that one dumpling could be produced in each one. The rectangular plate on top of the base had a lever to fold and cut the dumpling dough. There is an extendable arm on the side that moves the top piece up and down. The top part contained a handle on the top with three cones that dispensed the filling through a twisting mechanism. These features all worked cohesively together to produce quality dumplings. (Po-Ying Chiang)

Operation Instructions:

You place the pre-made dough into each half circle on the base rectangular box. You can also make and roll out your own dough that can be spread over the top of the base. Next, you remove the side of the top part and place your filling into the container. You lower the top part until it is a couple of inches above the place and twist the lever until all of the filling is dispensed into the dough. Then, you raise the top part to the maximum height and fold the lever on the bottom to fold and cut the dumplings into their final form. You then remove each dumpling and put them on a tray while you prepare to repeat the process. (Po-Ying Chiang)

Engineering Analysis

The top rectangular piece and the base rectangular piece are going to be made specifically out of ABS plastic. This material is cheap, durable, and safe for food processes. The extendable arm will be made out of aluminum to extend smoothly and hold the top part above the bottom part. We estimated our device to cost about $60 which is extremely cheap for a semi-automatic dumpling maker. (Po-Ying Chiang)

Conclusion

Our team believes that the design was efficient and inexpensive. It is a simple idea that is fairly easy to manufacture and use. It is a lot smaller than most dumpling makers which makes it easier to store in small spaces. We did not create a mechanism to make and roll out the dough which was a necessity for the design. We could have made an automatic design so that the process was quicker. We could have put more thought into the size of the cones that dispense the filling because they were a tiny. This analysis would help us improve our design if we chose to redo the project. (Po-Ying Chiang)