EDSGN 100
Introduction to Engineering Design
Section 009

Online Design Portfolio

Zachary Zaltsberg

Submitted By: Zach Zaltsberg

Submitted To: Xinli Wu, Ph.D., P.E.

Date of Submission: 15 December 2015

Abstract

Zachary Zaltsberg's Online Design Portfolio is composed of an updated resume, the EDSGN 100 Course Syllabus, various Practice Problems and Exercises, and Design Projects 1 and 2. It emphasizes what the student has learned and accomplished throughout the course, particularly in relation to CAD, the design process, and proper communication of said design.

Table of Contents

Cover Page……..….1

Abstract……...2

Table of Contents……..3

Resume……...…4

Course Syllabus……..……..8

Practice Problems and Exercises……..…11

Design Project 1……...…12

Design Project 2……...…16

Summary and Conclusions……...…20

Acknowledgements……..……20

Zachary Zaltsberg *College Resume*

3325 Paper Mill Rd. 267-690-0112
Huntingdon Valley, PA 19006 ZachZaltsberg@gmail.com

Education

Lower Moreland High School - Class of 2015

Advanced Placement Courses:

AP Calculus AB, AP U.S. History, AP Biology,
AP Calculus BC, AP Microeconomics,
AP Macroeconomics, AP Chemistry, AP Physics, AP English
Language and Composition

Honors Courses:

Algebra II, World Studies Literature, World Studies History,
Freshman Chemistry and Physics, French III, Pre Calculus,
American Studies Literature, American Studies History,
Biology, French IV, English 11, Chemistry, French V

Accelerated Courses:

Algebra I Honors (7th Grade), French I Honors (7th Grade),
Geometry Honors (8th Grade), French II Honors (8th Grade)

Test Scores

ACT February 2014
Composite: 34
English: 35
Mathematics: 31
Reading: 33
Science: 35
English/Writing: 31
Essay: 7

ACT April 2014
Composite: 33
English: 33
Mathematics: 34
Reading: 33
Science: 33
English/Writing: 31
Essay: 8

SAT Subject Tests
Math Level 2: 800
Biology M: 790
U.S. History: 680

SAT March 2014
Math: 730
Critical Reading: 720
Writing: 640

SAT October 2014
Math: 750
Critical Reading: 680
Writing: 640

AP Exams
Calculus AB: 5
U.S. History: 4
Biology: 4

Honors and Awards

National Honor Society (Grade 10-12)
Honor Roll (Grades 9-11)
Gifted Individual Education Program (Grades 1-12)
Winner of SIG Yale University Entrepreneurship Competition (Grade 10-11)
Junior Achievement Salesperson of the Year (Grade 9)

American Mathematics Competition Participant (Grades 10-11)

In-school Extracurricular Activities

FBLA
- Member 2011-2013
- President and Founder 2014-2015
  - Brought FBLA back into my school's extracurricular activities
  - Marketed club to students by creating a video and lobbying
  - Discussed economic indicators, business news, and out of school opportunities
  - Participated in business related compatitions

Debate Club
- Member 2013-2014
  - Champion of the Intramural Public Forum Debate
  - Participated in the SPDL Interscholastic Public Forum Debate
- Treasurer 2014-2015
  - Ran finances for all Debate events

French Club
- Member 2011-2014
  - Attended social gatherings
  - Spoke French in a social environment
- President 2013-2014
  - Ran finances and planned events

Investment Club
- Co-Founder 2013-2015
  - Founded Investment Club with two colleagues
- Secretary 2013-2015
  - Assisted and taught new members to trade and invest in the stock market
- Treasurer 2013-2015
  - Kept track of members' portfolios

National Honor Society
- Member 2013-2015

Math Club
- Member 2013-2015
  - Participated in the American Mathematics Competition
  - Participated in an Interscholastic Mathematics Competition

Athletic Achievements

Swim Team
- Swimmer 2003-2014

Outside of School Extracurricular Activities

Community Service
- Special Olympics 2012-2013 (120 Hours)
  - Coached mentally disabled people in swimming
- Huntingdon Valley Youth Center 2012-2013 (25 Hours)
  - Chaperoned events for children
- Enchanted Development Center Day Care 2013 (256 Hours)

Helped to run a newly opened child's day care

Junior Achievement

Member 2011-2012

Began a company selling gift baskets

We sold a gift baskets because they could target multiple markets during different times of the year (Generic, Birthday, Christmas, Valentine's Day, etc.)

Vice President of Marketing 2011-2012

Marketed and sold our product towards our target demographics

Salesperson of the Year 2012

Sold the most gift baskets

Summer Activities

Summer Institute for the Gifted

Princeton 2011

Basic Chemistry

Biology

Statistics

Engineering

Debate and Speech

Yale 2012

Study of the Universe

Created 30 minute presentation on the structure of the universe

Medical Research

Entrepreneurship

Leader of marketing campaign

Pitched to local bakery in competition and won the competition

http://www.nhregister.com/general-news/20120720/east-havens-sugar-bakery-debuting-new-cupcake-thanks-to-yale-program-video

Applications of Chemistry

Princeton 2013

Law

Creative Writing

The Brain and Dreaming

Study of the Universe

Created 30 minute presentation on the types of particles

http://prezi.com/wwgj9roxhv94/?utm_campaign=share&utm_medium=copy&rc=ex0share

Paid Work Experiences

Somerton Jewelers

Marketing Manager 2013-2014

Created and maintained company website

http://www.somertonjewelers.com/

Ran campaign targeted at brides

Received information on brides from bridal expos

Posted ads in bridal magazines

Sent periodic emails to brides with gift certificates

Ran campaign targeted at police officers

Received information on police officers from the Fraternity of Police (FOP)

Posted ads in police magazines through the FOP
Immediate 30% discount with badge or membership card
Ran campaign targeted at Russian community for New Years
Employed dozens of my peers to hand out fliers
700% return on investment
Miscellaneous Advertisements
Bridal Magazine, Jewish Calendar, FOP Magazine, etc.
Managed finances of my campaigns

Personal Interests

Stock Market
Investopedia Stock Simulator
41.6% Return in One Month

Guitar
Played guitar for 8 years

Unique Experiences

Created Zaltsberg Family Tree
Tree of over 250 names
Learned many historical and unique stories
Developed stronger family values
Learned history of former Soviet Union
http://www.myheritage.com/site-198898001/zachary-zaltsberg

Summer Institute for the Gifted
Met people from all around the world
Inside look at many different cultures
View multiple career paths
Helped me to develop my interests

Course Syllabus:

Course professor: Xinli Wu, Ph.D., P.E.

Phone number: (814)863-1537

Fax number: (814)863-7229

E-mail address: Xinli@psu.edu

Office hours & location: 1:10 - 2:00 PM, Tuesday,

and/or by appointments, 213-S Hammond Building

Course Number & Class Time: EDSGN 100 Section **009:** 2:30 – 4:25 PM, MWF

EDSGN 100 Section **010:** 4:40 – 6:35 PM, MWF

Teaching Assistants: **Section 009:** Jeremy D. Barnhart, and Paul R. Perreault, Jr.

Section 010: Nick A. Petrunyak, and William A. Haunstein

Course overview and objectives:

This is a design-driven course with emphasis placed on skills such as: team-working, communication skills (graphical, oral, and written), and computer-aided design and analysis tools. The course will introduce students to the engineering approach to problem solving with strong references to basic science and math skills, as well as testing and evaluating design ideas by building prototypes. The design projects are the total of at least 30 hours of in-class work (one third of the course). Two design projects will be assigned during the semester. The design projects will require the students to work in a team. **The course grade for the students will reflect their abilities to function effectively as team players.**

Skills acquired by students during the course:

Computing:	Solid Modeling/CAD, EXCEL (spreadsheet), PowerPoint (multimedia presentation)
Internet Skills:	Designing and publishing a basic webpage

Graphics:	Sketching, orthographic projections, multiview drawings, scales, dimensioning, isometric pictorial, oblique pictorial, sections, working drawings
Lab Skills:	experimental methods, data acquisition & analysis, prototype building & testing
Design Methods:	customer needs assessment, concept generation, design selection matrices, design for assembly- disassembly, safety, cost effectiveness, teamwork, and other constraints as need by the project

The following are some ground rules to help us maintain a steady progress through the semester:

1. Assignments are due at the start of the class period before the lecture begins. Assignments submitted after this time will receive a 20% deduction. A further 20% reduction will be applied for every week beyond the first.
2. The instructor will discuss any exam or assignment grade within 48 hours (excluding weekends and holidays) of its return, after which time the discussion is closed.
3. Excellent teamwork can improve the course grade by as much as 4% (2% per design project). Poor team work will lower your grade by the same amount.
4. Punctual attendance is mandatory for all the class periods. Course grade will be dropped to the next lower grade for every two classes missed. All excused absences must be supported by written documentation, such as doctor's receipt, Penn State athletics travel notice, ROTC notice, etc.
5. No makeup labs will be available for the Design sessions since this is unique to this section.
6. No cell phone including text message is permitted in the classroom.
7. Students are responsible for any missed handout and homework assignment for any unexcused missed class.
8. Students must use Penn State access account email address when he/she emails the instructor.

Academic Integrity:

Senate Policy 49-20 Academic Integrity

Definition and expectations: Academic integrity is the pursuit of scholarly activity in an open, honest and responsible manner. Academic integrity is a basic guiding principle for all academic activity at The Pennsylvania State University, and all members of the University community are expected to act in accordance with this principle. Consistent with this expectation, the University's Code of Conduct states that all students should act with personal integrity, respect other students' dignity, rights and property, and help create and maintain an environment in which all can succeed through the fruits of their efforts. Academic integrity includes a commitment not to engage in or tolerate acts of falsification, misrepresentation or deception. Such acts of dishonesty violate the fundamental ethical principles of the University community and compromise the worth of work completed by others.

The Penn State Principles:

1. I will respect the dignity of all individuals within the Penn State community;

2. I will practice academic integrity;
3. I will demonstrate social and personal responsibility;
4. I will be responsible for my own academic progress and agree to comply with all University policies.

Related sites:

- Penn State Principles, http://www.psu.edu/ur/2001/principles.html
- Code of Conduct, http://www.sa.psu.edu/ja/codeconduct.html
- Academic integrity, http://www.psu.edu/ufs/policies/47-00.html - 49-20

Practice Problems and Exercises

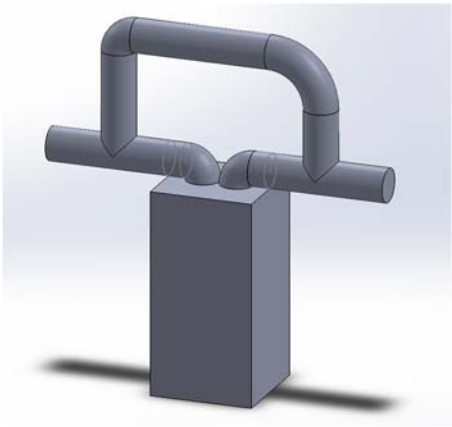

FIG 1. Design Project 2

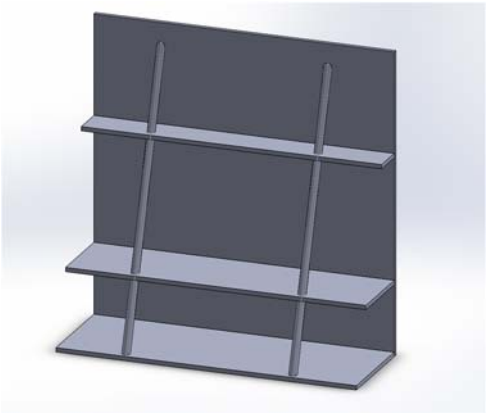

FIG 2. CAD Entertainment System

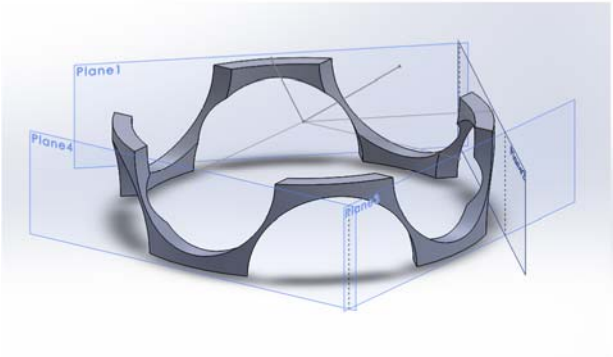

FIG 3. Dumpling Blade

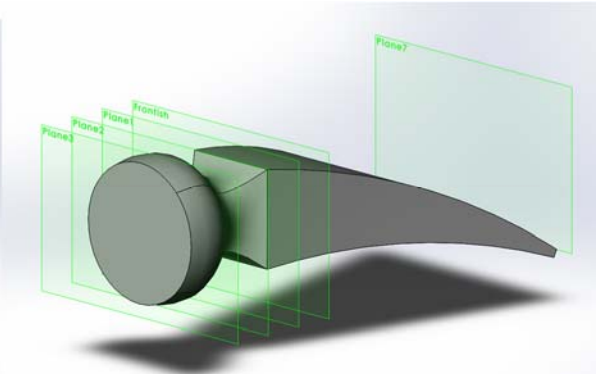

FIG 4. Loft and Sweep Hammer

FIG 5. Revolved Candle

EDSGN 100 Introduction to Engineering Design

Design Project #1: Dumpling Maker

Design Task:

Design and build a prototype of a dumpling maker suitable for use in either a household or a restaurant (backgrounds and some other details will be explained in class).

Design Specifications:

- The dumpling maker should be automatic or semi-automatic.
- The dumpling maker should produce no less than 10 dumplings per minute on average.
- The material cost for the dumpling maker should not exceed $200 unless it can be justified.
- The dumpling maker should be safe as a food processor, easy to maintain, safe to use, and dishwasher safe.

Key Deliverables:

A lab report to be published on the web with the following items included (*Note: Guidelines for the lab report will be given later*):

1. Problem statement
2. Mission statement
3. Customer needs assessment
4. Gantt chart
5. Design approach (concept generation and concept selection with design matrix)
6. Working drawing
7. Prototype (images, scale, operation instruction, etc.)
8. Working mechanism and engineering analysis
9. Cost analysis
10. Conclusion
11. References (if any)
12. Acknowledgement (if any)

Evaluation Criteria:

- Design meets specifications
- Creativity/Innovation
- Working mechanism and operation instruction are clear
- Ease of operation
- Safe to use
- Cost efficient

Design Project 1

3D Model Image

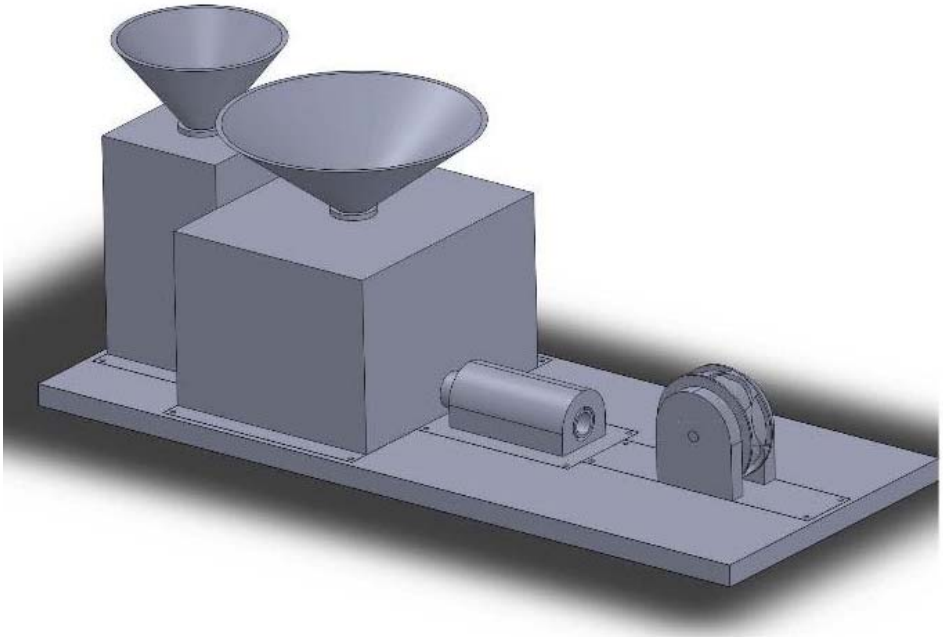

Assembly Drawing

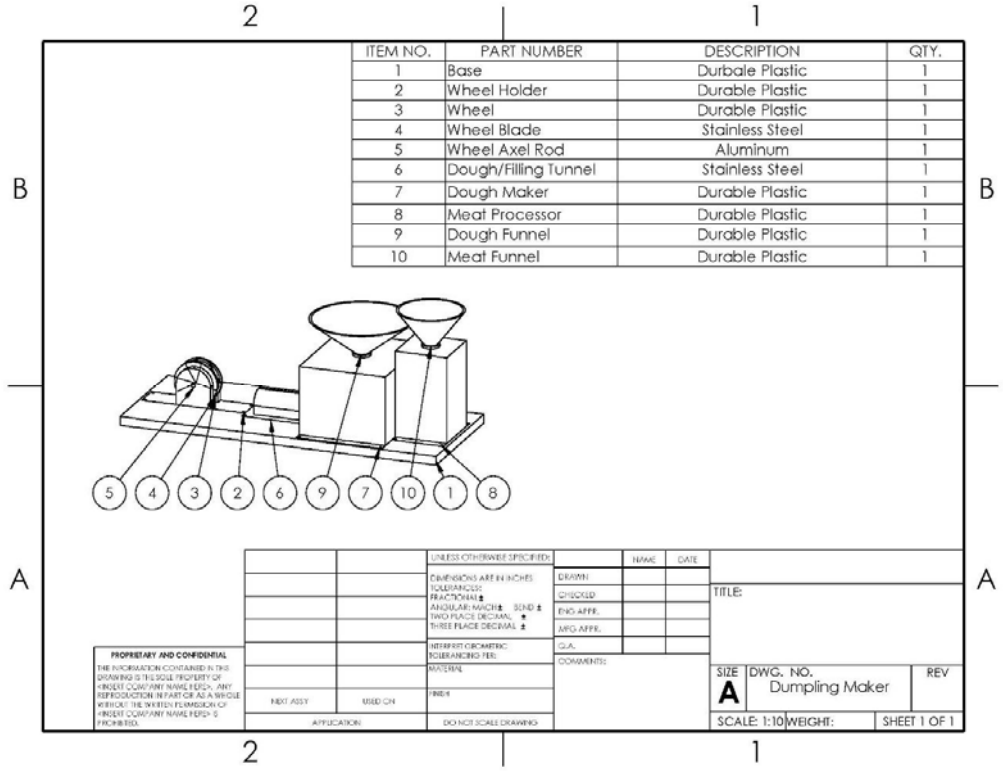

ITEM NO.	PART NUMBER	DESCRIPTION	QTY.
1	Base	Durbale Plastic	1
2	Wheel Holder	Durable Plastic	1
3	Wheel	Durable Plastic	1
4	Wheel Blade	Stainless Steel	1
5	Wheel Axel Rod	Aluminum	1
6	Dough/Filling Tunnel	Stainless Steel	1
7	Dough Maker	Durable Plastic	1
8	Meat Processor	Durable Plastic	1
9	Dough Funnel	Durable Plastic	1
10	Meat Funnel	Durable Plastic	1

Detail Drawings

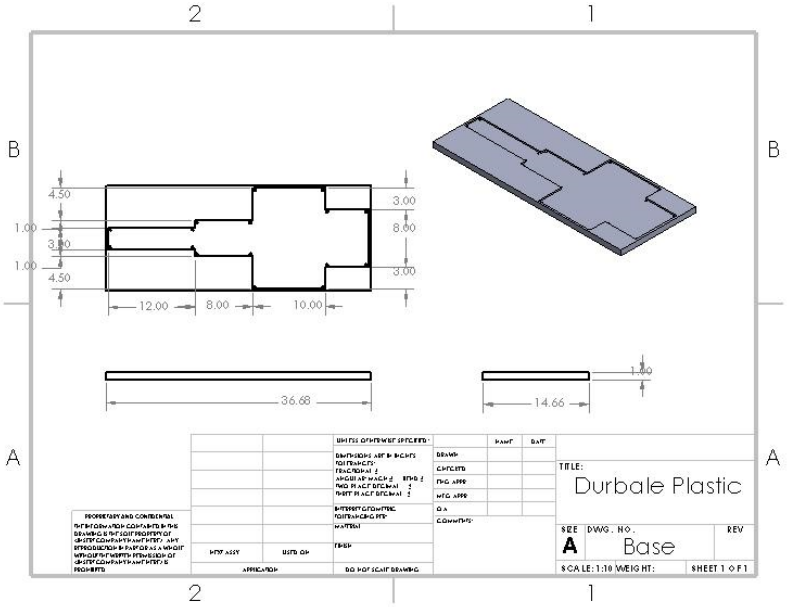

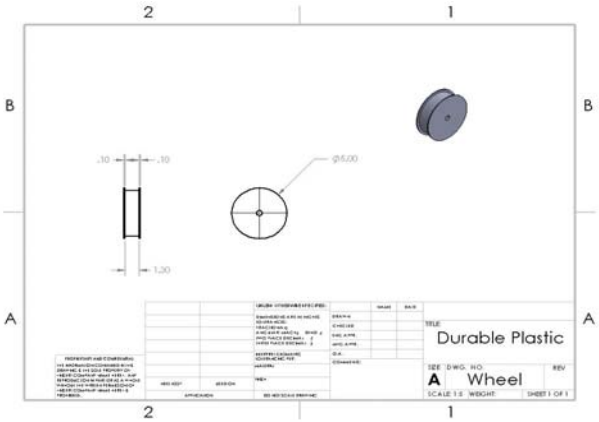

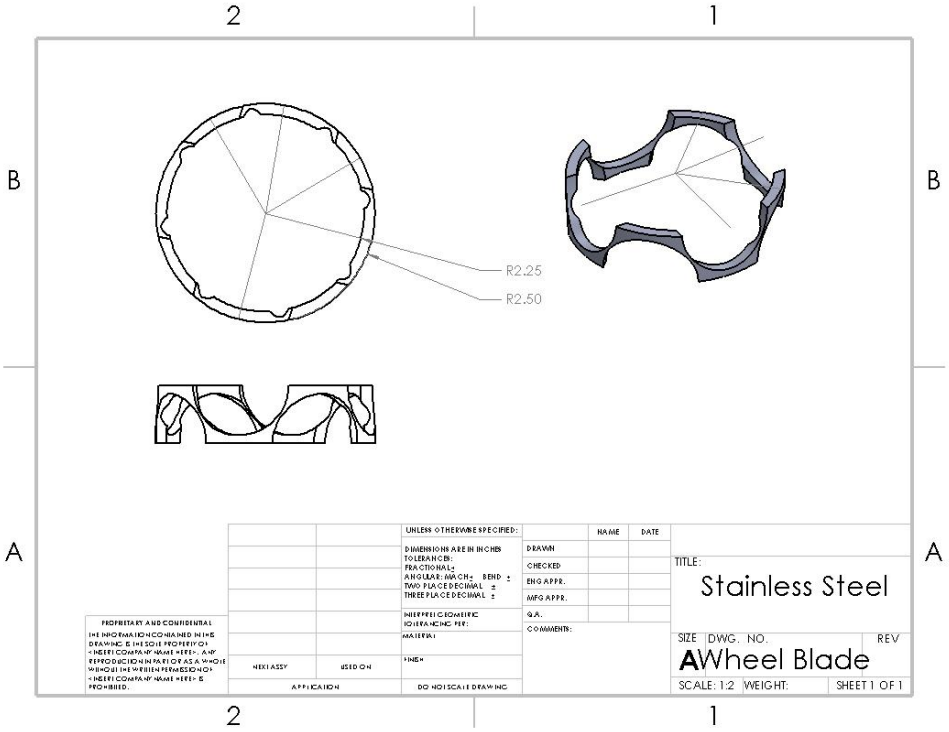

Design Analysis

Design Features:

Group 3's Dumpling Maker 1.0 offers many bold and useful feature. First of which is that the entire process is automatic, offering the easiest dumpling making experience possible. The machine prepares the filling and dough for the user based on raw materials that the consumer puts in. All components of the machine including dough maker, filling processor, tubing, etc. is entirely removable and replaceable if program or in need of updating. The key feature of the machine is the speed and efficiency with which it makes dumplings, thanks to the specialty cutting wheel. The cutting wheel presses the dough and filling with no loss into perfectly shaped dumplings.

Operation Instructions:

Operation of Group 3's Dumpling Maker is very simple. Put all filling ingredients into a bowl. This includes all meats, vegetables, and seasoning that would normally be used to fill a dumpling. This whole bowl can be poured into the posterior funnel where it will be minced and mixed inside the machine with the same consistency as would come from a food processor. All dough ingredients will be poured independently into the anterior funnel. The dough mixer in the container will mix and knead the dough like any other dough maker would. A tube coming from the filling processor runs through the dough maker and pumps out filling. A tube coming from the dough maker surrounds the filling tube and pumps out dough. Dough is pumped out in a pipe like shape with a filling cylinder in the center. This "dumpling cylinder" then runs under a spinning wheel that cuts and presses it into dumpling shapes that are dumped off the end of the machine.

Working Mechanism:

The whole machine is run by electricity that The Filling Processor works like any other food processor. There is a pair of rotating blades that minces the meat and all other filling raw materials. A piston in the tube at the base pushes the filling through the piping. In the dough maker, rods rotate around, kneading and preparing the dough from the raw flour and water poured in. A similar piston mechanism pushes the dough through a pipe around the filling pipe.

EDSGN 100 INTRODUCTION TO ENGINEERING DESIGN

FALL 2015

Guidelines for the second design project report on GE's Freight, Fuel, & Emissions Project:

NOTE: Your final technical report must be done in pdf format and should begin with a standard main cover page. The project report must be posted on www.personal.psu.edu website or http://www.weebly.com/ . This project report is the culmination of your project and will be visited by our project sponsor, other students, and faculty. To facilitate browsing, reading, and indexing of the large number of reports that will be submitted, we require some standard items for the web report's "cover page". Please save your cover page file as "edsgn100_fall15_sectionXX_teamX_dp2.pdf". Please have the entire report as ONE pdf file.

1. The project report must include (but not limited to) the following items:
   - (1) A cover page indicating the design title (large font size), the sponsor, Penn State and GE logos, course number and name (normal/small font size), section number, team number and names, team photo, submitted by and submitted to (with URL links to the person's website created for this course), a descriptive image (photo of prototype/model, or CAD model) of the final design (including labels if necessary), and date of submission.
   - (2) Abstract (or executive summary) for the report (about 50 words)
   - (3) Table of contents (the report must be easy to navigate) with email links to the author of each chapter
   - (4) Introduction
   - (5) Description of the design task
     - Problem Statement (be specific about the problem your team intends to solve)
     - Mission Statement (be specific about the mission your team tries to accomplish)
     - Design Specifications/ focus/scope/hypothesis
   - (6) Design process/approach – design matrix
     - Project Management – Gantt Chart
     - Concept Generation – Brainstorming (Briefly describe FIVE system design concepts with sketches)
     - Design Idea/Concept Selection – Design Matrix
     - Description of the Best Design Selected
   - (7) Prototype/Model
     - Relative design drawings/system diagram (by CAD with any CAD software including Sketchup) detailing the final design solution
     - Prototype scale and digital image(s) of the prototype
     - Design features
   - (8) Analysis
     - Rationale for the selection of the recommendations and how it can improve the cost effectiveness, reduce smog and emissions while maintaining or increasing the freigt shipping capacities.
     - Concept of Operations.
     - Life cycle analysis
     - Assessment of important aspects of your system for feasibility and adoption
     - Economic viability of the system.

(9) Summary and conclusions
(10) Attachment of the PowerPoint Presentation Slides
(11) Attachment of the tri-fold brochure
(12) Acknowledgement (if any)
(13) References (if any)

2. The project report must be published on the web before 5:00 p.m. on **December 11, 2015.**

3. **A hard copy** (Cover page only) and **an email** with a subject "Section No. Team No." indicating the URL of the project report should be submitted to the instructor no later than 5:00 p.m. on the date specified on item 2 above for each section.

4. Please indicate the contribution each team member made to the lab report by placing the member's name on the part he/she wrote.

5. Individual grades may be different from team's grade depending on the member's contribution and effort.

6. Use the following formats for labels and captions of figures and tables:
Table 1. Design Matrix
FIG. 1. Image of Prototype

7. Use the following formats for reference lists:

Dixon, J. R. (1991), "Engineering Design Science: New Goals for Education," *Mechanical Engineering*, 113 (3)

Cheng, F. H. (1985), *Statics and Strength of Materials*, Macmillan publishing Company, NY.

Coduto, D. P. (1994), *Foundation Design - Principles and practices*, Prentice Hall, NJ.

Horenstein, M. N. (2002), *Design Concepts for Engineers*, Prentice Hall, Upper Saddle river, NJ.

Design Project 2

3D Model Image

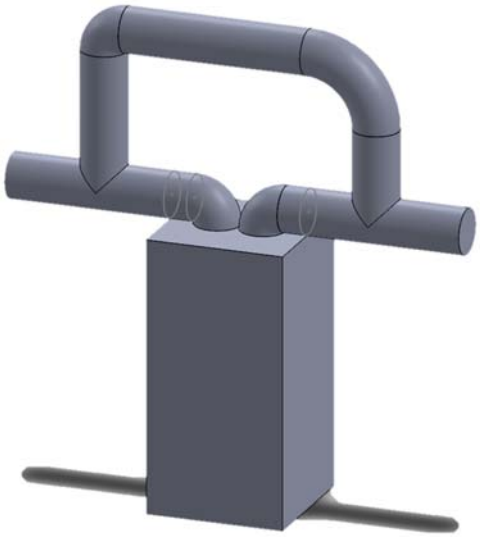

Physical Prototype

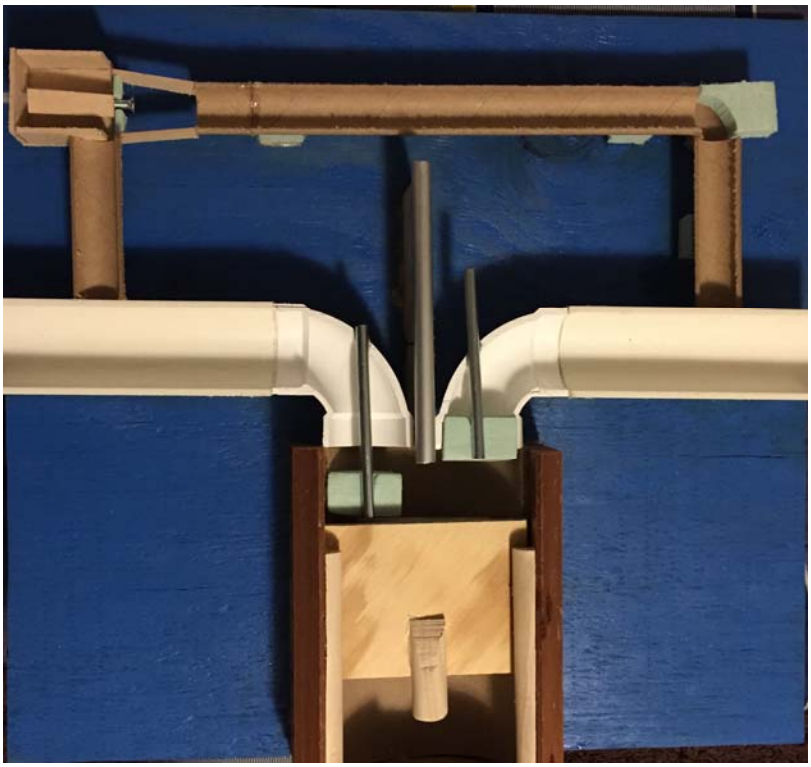

Design Analysis

Design Features:

The design consists of selling the tier 2 fleet and buying tier 3 locomotives. Locomotive features will consist of buying NextFuel™ Natural Gas Retrofit Kits. EGR systems will be implemented on all of the engines. Design 4 also features port injection consisting of an 80% liquid natural gas and 20% diesel within the cylinder during combustion.

Rational:

Team 3 realized that, at some point in the near future, Tier 4 would be the minimum required standard and, therefore, wanted to create a sustainable design that would reach these higher requirements and remain cost-effective.

Feasibility:

Team 3's design is feasible, because the necessary technology to implement this design already exists. Furthermore, unlike many other possible designs, this one only requires a starting cost of $25 million. While this cost is substantial, the return on investment is 2 years. This plan actually saves GE $100 million in the long-run.

Summary and Conclusion

In EDSGN 100, I learned about design specifications and skills necessary in any engineering field, such as CAD and orthographic sketching. Furthermore, and more importantly, I learned the crucial steps of the design process and how to complete them alongside a team. Over the course of two separate design projects having had little experience with engineering or engineering design in the past, I felt that I learned quickly, leaving me significantly more prepared for a successful career in engineering.

Acknowledgements

As this course comes to a close, I would like to offer my deepest thanks to Professor Xinli Wu, Ph.D., P.E., and the Teaching Assistants Jeremy D. Barnhart and Paul R. Perreault for making this year interesting and fun, Without them, I would not have been as motivated to push myself to learn the material and practice it regularly. The course was rigorous at times, but I am a better student and engineer for it in the end.

I would also like to thank General Electric for sponsoring our Second Design Project alongside Penn State University and for selecting my time for the People's Choice Award for Best Design Communication. It was an honor and showed my team's hard work did not go unnoticed.