The Suave Mauve Detector

Sponsored by AT&T

EDSGN 100: Introduction to Engineering Design
Section 15, Team 3

Submitted By:
Alexa Refosco
Daniel McMahon
Joe Dunleavy
Stacy Arner
Xiahao Huang

Submitted to:
http://aqr5371.weebly.com
http://www.personal.psu.edu/dfm5128/
http://www.personal.psu.edu/jed5454/
http://sia5189.weebly.com/
http://www.personal.psu.edu/xxh5070

Submitted May 2, 2014

Abstract (Xiahao)

This report presents a design for a smoke, carbon monoxide, and natural gas detector. Four designs for the detector were devised and then compared by considering the ease of installation, cost of upkeeping, size, and cost of the detector itself. Design 3 was chosen as the best design, as it is easiest to maintain and the smallest, allowing for easier installation.

Table of Contents (Joe)

Introduction (Alexa) 1

Design Task

Problem Statement (Xiahao) 1

Mission Statement (Stacy) 2

Design Specifications (Dan) 2

Design Process

Project Management (Stacy) 3

Concept Generation (Alexa) 3

Design Ideas (Stacy) 4

Trade Studies (Alexa) 6

Description of the Design (Stacy) 10

Prototype

Design Drawings (Alexa) 11

Prototype Scale (Joe) 12

Design Feature (Alexa) 12

Analysis

Definition of IoT (Dan) 13

Rationale (Dan) 13

Concept of Operations (Dan) 14

Assessment (Dan) 15

Economic Viability (Dan) 15

Summary (Xiahao) 16

PowerPoint Presentation Slides 17

Tri-Fold Brochure (Dan) 17

References (Joe) 17

Introduction (Alexa)

Thousands of lives are lost each year from fires and gas leaks in houses across America. 60% of fire related deaths in the early 2000s were in homes without working fire alarms. Carbon Monoxide causes an estimated 15,000 emergency department visits and 500 unintentional deaths in the United States each year. Natural gas poisoning can cause asthma, depression, high cholesterol levels, high red and white blood cell counts, migraines, and other harmful conditions to the human body.

Smoke detectors, carbon monoxide detectors, and natural gas detectors are placed in houses to warn members of the household of dangers within the building. However, families disarm the detectors because of the obnoxious noises they make, especially when battery levels are low and smoke from cooking unintentionally sets the alarm off. People then forget to turn the detectors back on, and thus put themselves and their families in danger.

People who have hearing disabilities are put in danger with standard alarms. More often than not, elderly people have difficulty hearing the alarms, and do not get the warning that smoke or gas is detected in their houses. Flashing lights are often used to warn those who cannot hear the standard beeping. However, people who are negatively affected by the flashing lights are put in dangerous situations because of the alarm, as well as the impending fire or gas leak.

Design Task

Problem Statement (Xiahao)

Houses either lack smoke and gas detectors all together or the detectors are disarmed to prevent them from making obnoxious noises. People with hearing impairments have alarms that set off flashing lights throughout the home, which may be dangerous to those with epilepsy, migraines, or similar conditions.

Mission Statement (Stacy)

Create a product that will warn homeowners about smoke and gas in the house, while not being too bothersome that the homeowners will want to disconnect the device or dangerous to those suffering from conditions set off by flashing lights.

Design Specifications (Dan)

For the project, the main focus was designing a product that was part of the internet of things. That is, it links items through the internet, allowing for communication between them which leads to increased efficiency. Under the more-narrow lens of fire safety, additional criteria were created: the system must not be bothersome and it must still serve its main function of alerting endangered individuals. By designing a product that feels like an integrated part of the house, without sacrificing functionality, the product will lessen the tendency of homeowners to unplug it, thus rendering it useless, in an effort to silence it during false alarms.

Design Process

Project Management (Stacy)

Table 1. Gantt Chart

Date:	March 17	March 24	March 31	April 7	April 9	April 14	April 16	April 21	April 23	April 28
Ideas:										
Kick-off Meeting										
Gather Information										
Brainstorm Ideas										
Design Drawings										
Design Matrix										
Construct Prototype										
Prepare Report and Presentation										
Present Project										

Concept Generation (Alexa)

Five possible designs for the alarm system were discussed. Design 1 includes a wired system with 1 light bulb for each color attached to the device. Design 2 is similar to design 1 but relies on batteries. Design 3 is a device that is wired into the wall and has 1 light bulb that can change colors, similar to Philip's Hue Connected Bulb. Design 4 is similar to design 3 but relies on batteries. Design 5, which is not drawn, consists of a battery operated device with normal

white light bulbs. Design 5 was decided not as creative nor as eye-catching as the other designs, and was thus not further investigated. Below are rough sketches of the 4 possible ideas. These sketches do not reflect the shape nor size of the final product.

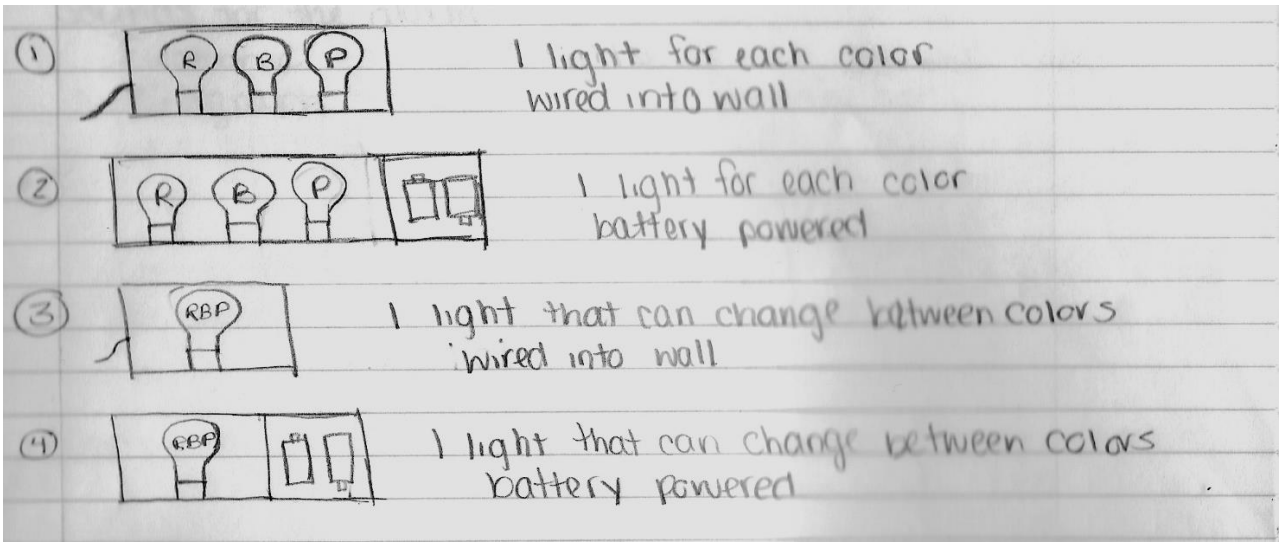

FIG. 1. Possible Designs

After further discussion about how to connect the product to the internet of things, it was decided that instead of light bulbs connected to the device, the device will wirelessly connect to the lights in the home, and will then bathe the whole house in colored light instead of just the room with the device installed.

Design Ideas (Stacy)

Design Matrix 1: Alarm Design

Criteria:	**Weight:**	**Design 1**	**Design 2**	**Design 3**	**Design 4**
Cost	20%	1	3	2	4
Size	15%	3	1	4	2
Ease of Installation	15%	1	3	2	4
Cost of Upkeeping	50%	3	1	4	2
	Total:	2.3	1.7	3.3	2.7

Each design was rated on a scale of 1-4, with 1 being the worst and 4 being the best, in comparison with a normal smoke detector. The "Cost of Upkeeping" category refers to the monetary amount that would be required to replace the various components of the alarm, including the light bulbs and batteries. Design 3 had the highest score overall, and was chosen as the design for our alarm system.

Design Matrix 2: Type of Notification Systems

Criteria:	**Weight:**	**Light System:**	**Noise:**	**Light/Sound:**	**App/Noise:**	**Call Center Alarm:**
Cost	20%	2	3	2	5	1
Safety	40%	2	3	4	4	5
Annoyance	25%	5	3	3	2	1
Clarity	10%	5	3	4	4	5
Other Uses	5%	4	3	4	3	3
	Total:	3.15	3.0	3.35	3.65	3.0

Design Matrix 2 explores the various ways to alert homeowners to the type of emergency occurring inside their home. Each type of notification system was rated on a scale of 1-5, with 1 being the worst and 5 being the best. The "Annoyance," "Clarity," and "Other Uses" categories were rated based on user opinions of what type of notification system would be the most effective in that category. The "Cost" category was rated on what would be the easiest to develop and make for homeowners. Finally, the "Safety" category was rated on how homeowners would react to the type of notification system, and whether or not the notification system would be effective in alerting the homeowners to the emergency. The scores between "Light/Sound" and "App/Noise" were very close so a new idea was proposed where a noise, light, and app were all used in a notification system. This idea was explored more in Design Matrix 3.

Design Matrix 3: Combined Design for Noise, Light, and App

Criteria:	**Weight:**	**Score:**
Cost	20%	2
Safety	40%	4
Annoyance	25%	5
Clarity	10%	5
Other uses	5%	5
	Total:	4.0

Design Matrix 3 examined a combined light, noise, and app notification system. The criteria that it was rated on followed the guidelines of Design Matrix 2, and was used to determine what would be the final notification system. The score of the combined notification system was the highest of all the notification systems, and was chosen to be implemented in this project.

Trade Studies (Alexa)

In order to decide what type of detectors to use for the system, research on smoke, carbon monoxide, and natural gas detectors was completed.

Design Matrix 4: Type of Smoke Detector (Stacy)

Criteria:	**Photoelectric Detector**	**Ionization Detector**	**Dual Sensor**
Sensitivity	2	2	4
Cost	2	3	1
Type of Fire:	Smoldering (2)	Flaming (2)	Both (4)
Total:	6	7	9

Ionization smoke detectors are more responsive to flaming fires. Photoelectric smoke detection is more responsive to smoldering fires. Dual sensor smoke alarms uses both ionization and photoelectric technologies to provide maximum protection against flaming and smoldering fires.

Each type of smoke detector was rated on a scale of 1-4, with 1 being the worst and 4 being the best. The smoke detectors were compared to each other using information obtained from the National Fire Protection Association website. It should also be noted that the "Type of Fire" section received both a category and a score. This was because each type of detector was created to be more specific to different types of fire, except for the dual sensor which includes technology from both photoelectric and ionization smoke detectors. The Dual Sensor smoke detector received the highest score and was chosen as the smoke detector to use in our alarm system.

Design Matrix 5: Type of Carbon Monoxide Detector (Stacy)

Criteria:	**Weight:**	**Opto-chemical**	**Biomimetic**	**Electrochemical**	**Semi-conductor**
Cost	10%	4	1	2	3
Sensitivity	60%	1	4	3	2
Power	10%	2	3	4	1
Longevity	20%	1	2	3	4
	Total:	1.4	3.2	3.0	2.4

There are four types of carbon monoxide detectors: opto-chemical, biomimetic, electrochemical, and semi-conductor.

Opto-chemical sensors consist of a pad of a colored chemical which changes color upon reaction with carbon monoxide. This detector is the least expensive, but also the least effective.

Biomimetic detectors work similarly to hemoglobin which darkens in the presence of CO proportional to the amount of CO in the surrounding environment. This is the most expensive type of sensor but is the most reliable.

Electrochemical sensors produce a current that is related to the amount of CO in the atmosphere. Measurement of the current gives a measure of the concentration of the CO in the atmosphere. Electrochemical sensors have long lifetimes and are very accurate, as long as they are run at room temperature.

Semiconductor sensors use thin wires of tin dioxide on an insulating ceramic base to detect CO in the environment. The sensing element must be heated to 400 °C in order to operate. The large power demand for the sensor makes it expensive to run, yet gives it a long lifespan.

Each type of carbon monoxide sensor was rated on a scale of 1-4, with 1 being the worst and 4 being the best. The carbon monoxide detectors were compared to each other using information obtained from the "Carbon Monoxide Detector" *Wikipedia* page. Sensitivity was given the highest weight because safety is the most important aspect of the entire project. The biomimetic sensor received the highest score and was chosen as the detector to use for carbon monoxide detection.

Design Matrix 6: Type of Natural Gas Detector (Stacy)

Criteria:	**Weight:**	**Electrochemical**	**Infrared Point**	**Infrared Imaging**	**Semiconductor**	**Ultrasonic**
Cost	5%	4	3	2	5	1
Sensitivity	60%	5	2	3	4	1
Range of Detection	15%	2	4	3	1	5
Longevity	20%	1	3	4	2	5
	Total:	3.7	2.55	3.15	3.2	2.4

There are five types of natural gas detectors: electrochemical, infrared point, infrared imaging, semiconductor, and ultrasonic.

Electrochemical sensors allow gas to diffuse through a membrane to an electrode, where it is either oxidized or reduced. The amount of current produced depends on how much of the gas is oxidized. The sensor is then able to determine the concentration of the gas. Electrochemical detectors require less maintenance than other types of detectors, but are subject to corrosive elements and chemical contamination, and may only last a few years before replacement is required.

Infrared point sensors use radiation passing through a volume of gas to detect leaks. Energy from the radiation is absorbed as it passes through the gas at certain wavelengths; carbon monoxide absorbs wavelengths of 4.2-4.5 μm. Infrared point sensors are advantageous because the sensor does not have to be in the gas to be able to detect it, so it can detect gas from further distances.

Infrared imaging detectors typically measure the absorption of a gas by passing it through a laser-illuminated chamber and measuring the change in transmitted signal.

Semiconductor sensors detect gases by a chemical reaction that takes place when the gas comes in contact with the sensor. These detectors must be in the gas in order for a reaction to occur.

Ultrasonic gas detectors use acoustic sensors to detect changes in the background noise of its environment. Most gas leaks occur in the ultrasonic range of 25 kHz to 10 MHz, so the sensor is able to easily distinguish these frequencies from background noise. Ultrasonic gas detectors are unable to measure concentration, but can determine the leak rate of the escaping gas.

Each type of natural gas detector was rated on a scale of 1-4, with 1 being the worst and 4 being the best. The natural gas detectors were compared to each other using information from the "Gas Leak Detection" *Wikipedia* page. The "Range of Detection" refers to how far the detector can measure the concentration of natural gas in the atmosphere. The Semiconductor had the highest total and was chosen as the type of natural gas detector to be used in this project.

Description of the Design (Stacy)

Design 3 was chosen as the final design. The system will use a dual sensor to detect smoke, a biomimetic detector to identify carbon monoxide, and an electrochemical sensor to detect natural gas in the home. In the event that the system detects either smoke or gas, a notification will be sent to a phone application, lights throughout the house will change color to reflect the emergency, and a noise corresponding to each type of emergency will sound. Design 3 also includes a wireless transmitter that will send messages to lights throughout the house, to the phone application, and to a kitchen remote. The kitchen remote will serve as a quick off switch in the event that the alarm goes off due to smoke in the kitchen and the owner knows there is no danger of a fire.

Prototype

Design Drawings (Alexa)

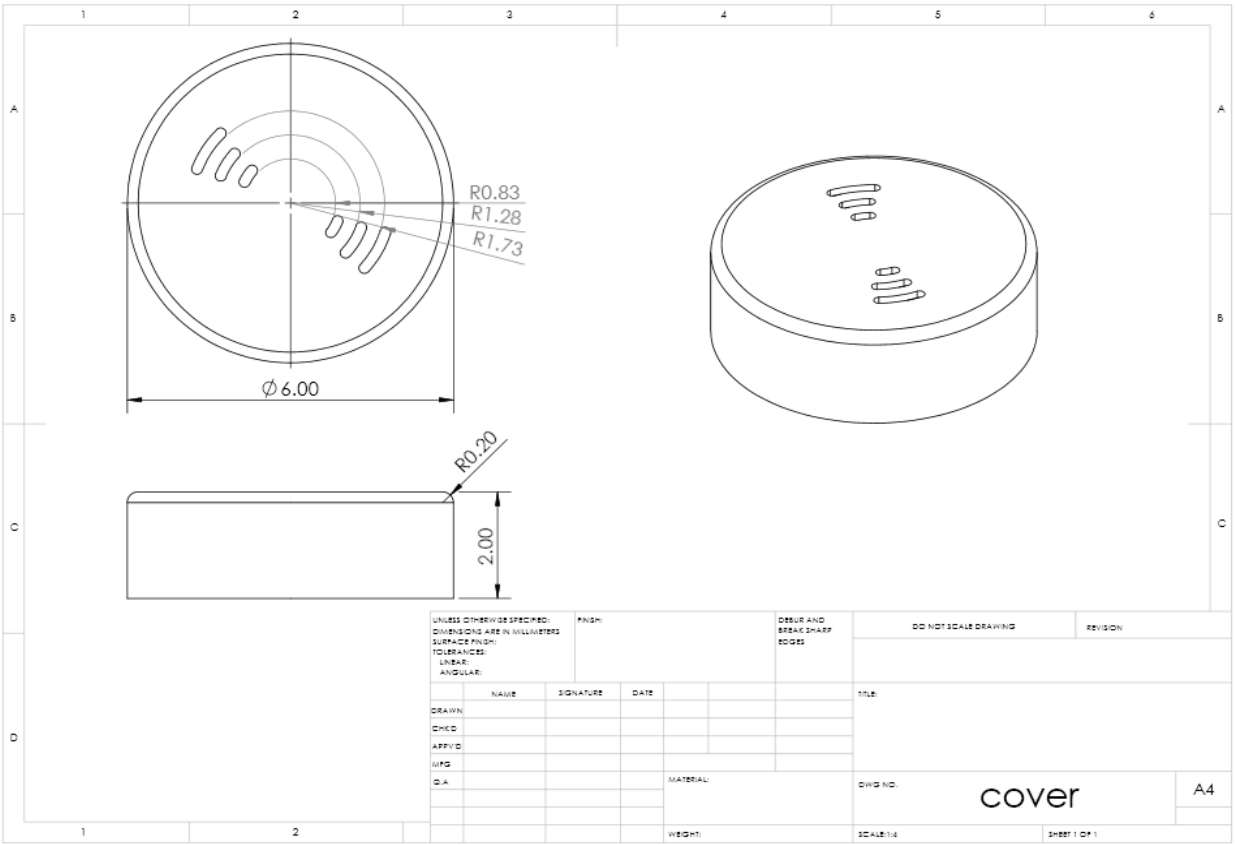

FIG. 2. Suave Mauve Detailed Drawing

FIG. 3. Suave Mauve Detector

Prototype Scale (Joe)

The prototype created for the project was scaled 1:1.

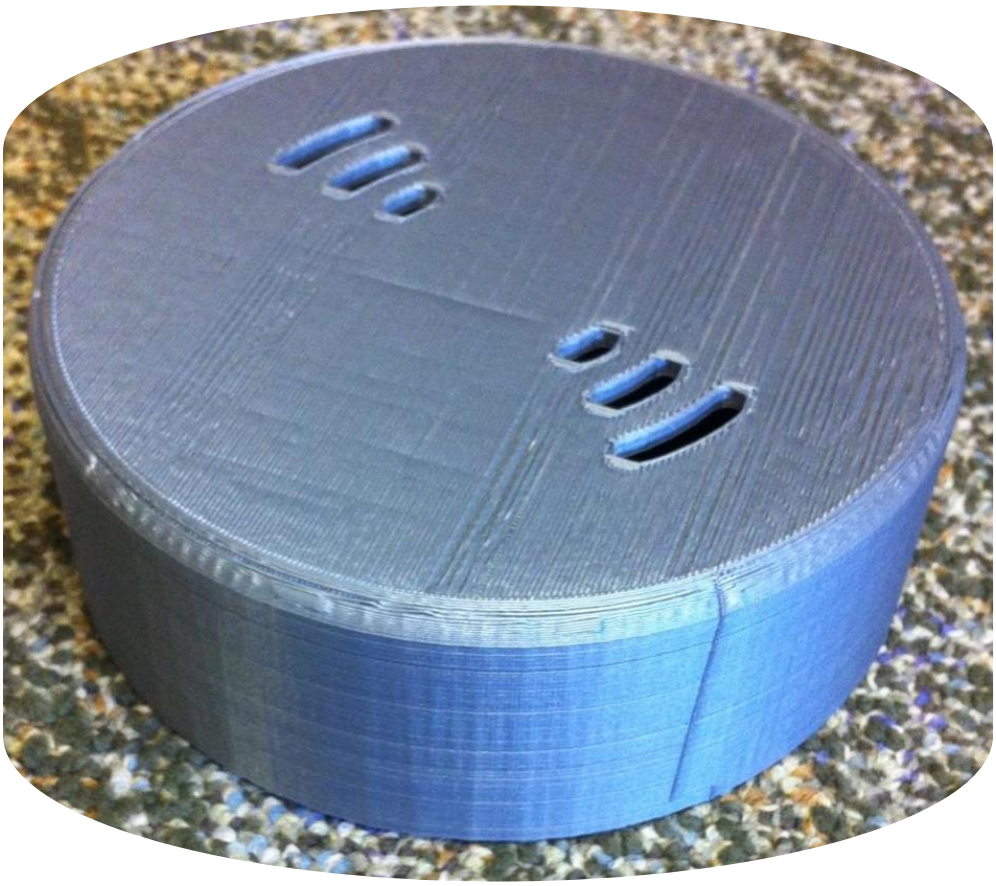

FIG. 4. Isometric Prototype

Design Features (Alexa)

The Suave Mauve Detector is a small, sleek device that is attached to the ceiling like a regular fire detector. It is wired into the house's electricity circuits, which allows it to run without batteries. The cover, which will be the only visible part of the device, will house the three detectors, an alarm system, and a wireless transmitter. The cover has a 6 inch diameter, and a depth of 2 inches. The button on the cover will serve as an off switch if the alarm goes off and the owner knows that there is no danger (i.e. smoky food in the kitchen).

Analysis

Definition of IoT (Dan)

As mentioned, both previously and briefly, the Internet of Things, or IoT, is system of digitally interconnected devices. More specifically, the IoT aims to improve the quality and ease of daily activities by allowing for communication between all of the devices that it consists of. The increased communication between devices reduces the burden that involved humans must bear and can increase efficiency and accuracy of systems.

Rationale (Dan)

Because of the vast number of possibilities that the IoT presents, the task of deciding on one was initially difficult. While brainstorming and subsequently researching perspective ideas, a recurring theme was noticed. Products within the IoT often aim to make life easier, but not necessarily safer. As a result, attention was shifted towards the different areas of safety, more specifically safety in the home. The choice to focus on home safety rather than general safety was due to feasibility issues concerning maintaining device connectivity during periods of mobility. This issue could have been a difficult and expensive one to overcome if we had instead focused on attempting to connect a car, or other non-stationary object, to other elements. With the scope of the project now focused on home safety, fire detection became an area of interest. While researching the matter, it was discovered that most fire deaths in the U.S. occur in homes without working alarm systems. Of these homes, a large number is comprised of homes with systems that have merely been unplugged. Therefore, it stood to reason that a product that had the alerting capabilities of a standard alarm, but was less bothersome could have the potential to save lives.

Concept of Operations (Dan)

Once the system has been activated by the presence of smoke, carbon monoxide, or natural gas, lights throughout the house turn on and colored according to the type of emergency: red for smoke detection, blue for carbon monoxide, and purple for natural gas. The alarm can be disarmed either though the kitchen remote, the actual detector, or through the app. Once disarmed, the system will return to the default state and won't be triggered by the same hazard within a certain set time period. If left unattended, the system will enter the next, more drastic stage. If the system is triggered during the day, this will involve switching from a purely light based alarm to one that involves both lights and noise, and if still unattended, will contact the authorities. If it is triggered at night, the system immediately generates both light and noise alarms, and will eventually contact the authorities if left unattended.

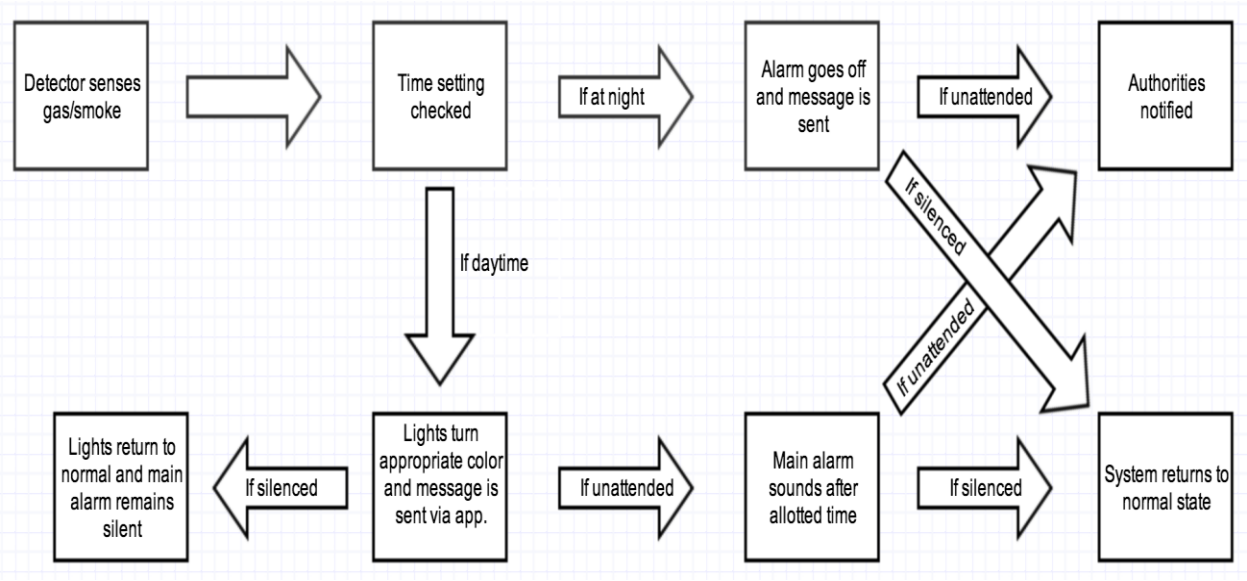

FIG. 3. Concept of Operations

Assessment (Dan)

Although the system may be comprised of multiple interconnected parts, the parts only communicate when the system is triggered by a potential hazard. While the system is in its default state, there is no need for any wireless communication, and as a result, no bandwidth is consumed during this time. Due to the relatively infrequent nature of hazards being detected in most homes, the bandwidth usage of the system, if implemented in a typical home, would actually be quite small. Additionally, the system avoids concerns caused by many other IoT assemblies. For instance, no sensitive information is transferred between the devices, so the typical privacy concerns associated with the IoT are not a large issue. One exception to this would be the ability to gain access to the Wi-Fi of the household by hacking into one of the devices within the system, which may have less security than typical household electronics, like computers. However, this is an issue faced by all item connected to the internet, and not unique to the Suave Mauve Detector. Since the problem is relatively widespread, products already exist to counteract similar issues, and could be adapted to remedy any security concerns created by the detector.

Economic Viability (Dan)

While many components of the system, such as cellphones and fire alarms, are standard parts of modern life, a few of the parts are both unique and expensive. Although these items are quite expensive to install, this shouldn't necessarily be viewed as a huge issue. This is because the majority of the cost associated with installation is associated with the HUE Connected light bulbs, which cost about $50 each. Despite their steep price, they were named product of the year in 2012 by Forbes and continue to gain popularity. This information suggests that people are willing to pay a premium price for the lights, even without knowledge of their possible

implementation into home safety systems. Because of this, it is not unreasonable to think that some people initially deterred by the cost might be persuaded to pursue the system after researching other uses for the lights. Furthermore, some individuals may already have the lights in their homes, which would drastically reduce the cost of the system. This will likely become increasingly true in the future, as the lights continue to gain popularity. In conclusion, while the product isn't affordable to people on the lower end of the income distribution, those with more expendable income may be willing to invest due to the value of the components extending beyond the system.

Summary (Xiahao)

Thousands of fire and gas related deaths can be prevented each year if working alarms are in every house. Many people find standard fire alarms to be obnoxious, so people disconnect their alarms, rendering them useless in a case of emergency. We set out to create a device that will save lives from fire, carbon monoxide, and natural gas poisoning. After narrowing down the designs and completing research about detection technology, the Suave Mauve Detector was created. Using a dual smoke sensor, a biomimetic carbon monoxide sensor, and an electrochemical natural gas detector, the system will be able to detect these emergencies and alert the homeowners. Lights throughout the house will turn red, blue, or purple, and afterwards, alarms will ring, depending on the emergency. If the device is not turned off in a certain time, either by the button on the device, the kitchen remote, or through the app, emergency responders will be notified. By being able to turn the alarm off conveniently, homeowners will leave their alarms turned on, thus increasing their safety in their homes.

PowerPoint Presentation Slides

The PowerPoint slides for the Suave Mauve Detector can be found at the following link:

https://docs.google.com/presentation/d/1p9zj1Q5GOCYrYueiBHB6kKn4-iq_XSxEZEj0sWfK52g/pub?start=false&loop=false&delayms=3000

Tri-fold Brochure (Dan)

The brochure for the Suave Mauve Detector can be found at the following link:

https://docs.google.com/file/d/0BxcEWirpu7n4cXhiUnVrdFducVU/edit?pli=1

References (Joe)

"Carbon Monoxide Detector." *Wikipedia*. Wikimedia Foundation. Web. 30 Apr. 2014.

"Gas Leak Detection." *Wikipedia*. Wikimedia Foundation. Web. 30 Apr. 2014.

"Ionization vs Photoelectric." *Ionization vs Photoelectric*. National Fire Protection Association, 26 Feb. 2014. Web. 30 Apr. 2014.