EDSGN 100

Section 015

Team 7

Master Cart

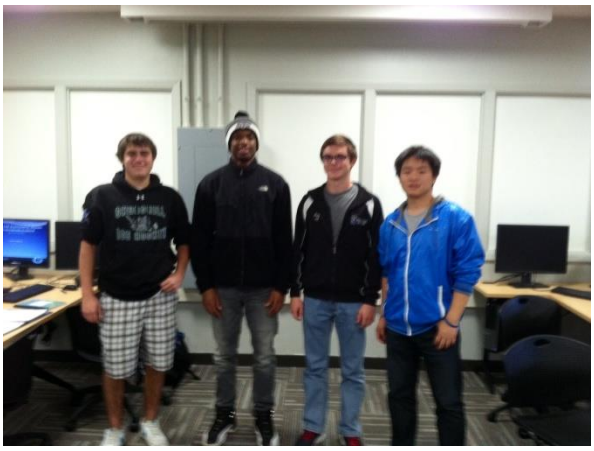

FIG. 1. Image of Design Team 7

Submitted by: Patrick Meigher, Centryll Scott, Ryan Troy, Weilin Ma

Submitted to: Xinli Wu

FIG. 2. Image of Prototype

Fall 2013

Abstract

This project was introduced to address the issue of college students needing a way to transport their groceries to their places of residence. Since many college students do not have vehicles on campus, the device would need to be highly portable while still being able to hold a decent amount of groceries. The device created in this project takes a simple design and adds different features to it in order to maximize capacity while still maintaining portability and storability.

Table of Contents

I. Cover Page (i) (Ryan Troy)

II. Abstract (ii) (Ryan Troy)

III. Table of Contents (iii) (Ryan Troy)

IV. Introduction (1) (Patrick Meigher)

V. Description of the Design Task (2) (Ryan Troy)
- -Problem Statement
- -Mission Statement
- -Design Specifications

VI. Design Approach (3-5) (Ryan Troy)
- -Project Management - Gantt Chart (3)
- -Customer Needs Assessment (3-4)
- -Concept Generation (4)
- -Concept Screening Matrix (4)
- -Concept Scoring Matrix (5)

VII. Final Design and Prototype (6-8) (Ryan Troy)
- -Final Design – 3-D Model, Assembly Drawing, Bill of Materials (6)
- -Detail Drawings (7)
- -Prototype Image and Scale (8)
- -Design Features and Operation Instructions (8)

VIII. Engineering Analysis (9-10) (Weilin Ma)
- -Working Mechanism (9)
- -Cost Analysis (9-10)

IX. Summary and Conclusions (10) (Centryll Scott)

X. References (11) (Weilin Ma)

Introduction

The goal of this project was to design a foldable shopping cart that would assist college students without vehicles in transporting their groceries from the store to their places of residence. The device needed to be able to handle a large load while still remaining highly portable and storable. The performed customer needs assessment indicated that customers' two highest priorities were portability followed by capacity. The results of the customer interest survey guided the direction of the brainstorming and concept generation processes.

The final shopping cart design, which is a combination of several early design possibilities, features a simple folding design that emphasizes maximum capacity and portability. It has a storage bag that is similar to a backpack attached to the back and hooks on both sides that can hold additional bags if necessary. These two features allow for increased capacity without sacrificing portability because the bag and hooks add relatively little bulk to the overall device. The hooks also benefit the overall ease of use of the device. The user can simply remove the bags from the hooks and fold the cart with one easy motion, making the shopping cart slender and compact for storage. The side hooks and rear storage bag are the best way to maximize capacity without negatively affecting portability, ease of use, cost, or durability.

The most unique and marketable aspect of the final design is the triwheel. Having these three connected wheels in a triangular formation in place of the usual standard wheel allows the user to effortlessly move the cart up and down stairs. This special feature separates the final design from most other similar products on the market because it provides a very high level of portability for customers who must transport groceries up stairs to get them home.

Description of the Design Task

Problem Statement:

Many people living in State College near Penn State University do not have vehicles and have a difficult time carrying and transporting their groceries from the store to their places of residence.

Mission Statement:

To design a foldable shopping cart that can easily and efficiently hold a person's groceries during shopping and then transport them safely back to that person's place of residence, with maximum capacity in mind. The shopping cart must also be easily storable to be quickly accessible for the next shopping trip.

Design Specifications:

1. The folding shopping cart should be easy to use (and assemble, if required).
2. The folding shopping cart should be ideal for transporting groceries and some other materials.
3. The folding shopping cart should fold compactly for easy storage.
4. The material cost for the folding shopping cart should not exceed $50 unless it can be justified.
5. The folding shopping cart should have a weight capacity of 100 lbs.

Design Approach

Gantt Chart:

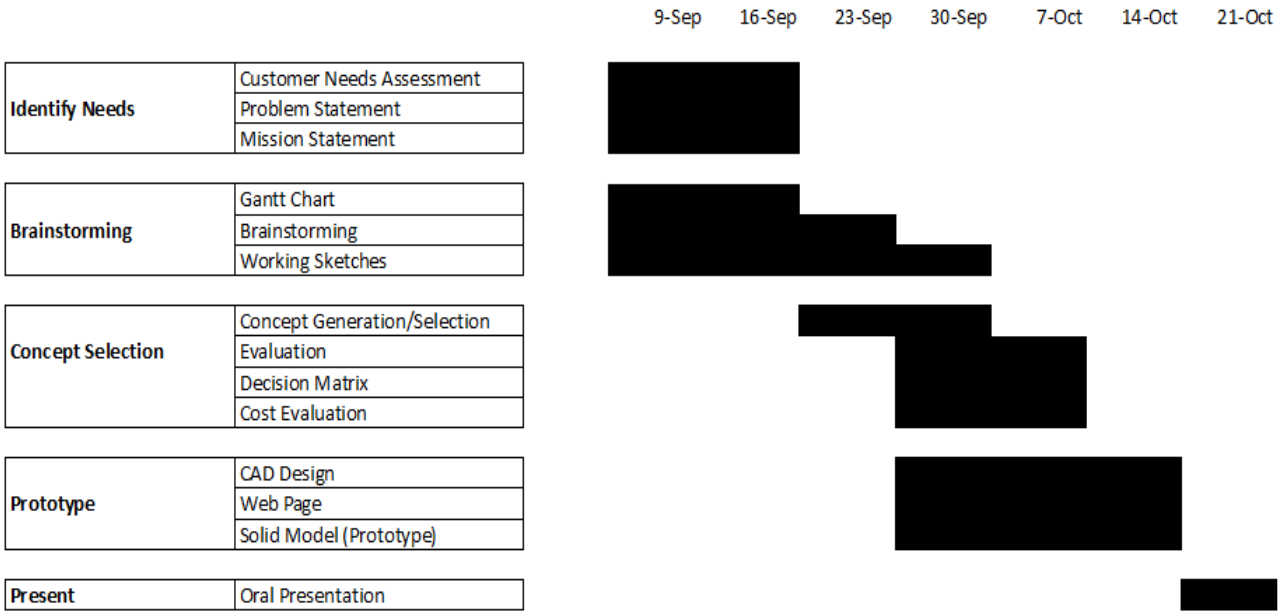

Table 1. Gantt Chart

Customer Needs Assessment:

Outside of a local grocery store, customers were asked a survey question as they left the store with their groceries to find out what customers would look for in a foldable shopping cart.

Survey Question: "Which of the following characteristics do you think would be most important in a foldable shopping cart?"

Customers were then given four answer choices: storage capacity, portability, ease of use, and special features.

The following table shows the results of the survey after one hundred customers were surveyed.

Characteristic	Storage Capacity	Portability	Ease of Use	Special Features
Number of People	35	40	15	10

Table 2. Results of Customer Needs Survey

Based on customers' responses to survey questions, customers are looking for the following qualities in a foldable shopping cart, ranked from highest to lowest:

1. Portability
2. Capacity
3. Ease of use
4. Appealing special features

These results indicate that customers are generally looking for a highly portable device that can also handle a large amount of groceries. However, they would prefer the device to be easily portable over how much it can carry. Additionally, customers are looking for a product that is easy to use, with some potential extra features to make the product more appealing over other similar products.

Concept Generation:

During the brainstorming process, ideas were created with both capacity and portability in mind. The goal was to create a device that could hold many groceries and then later be easily stored away. Five different designs were generated, each with a different feature focusing on capacity or portability.

Design Selection:

	Concepts				
	A	B	C	D	E
Selection Criteria	(Reference) Standard	Storage Bag	Front Basket	Tri-Wheel	Side Hooks
Ease of Use	0	0	0	+	0
Portability	0	0	0	+	0
Capacity	0	+	+	0	+
Storability	0	0	-	0	0
Durability	0	0	0	0	0
Ease of Manufacture	0	0	0	-	0
Customer Appeal	0	+	+	+	+
Sum +'s	0	2	2	3	2
Sum 0's	7	5	4	3	5
Sum -'s	0	0	1	1	0
Net Score	0	2	1	2	2
Rank	3	1	2	1	1
Continue?	Keep as reference	Combine	Revise	Combine	Combine

Table 3. Concept Screening Matrix

Selection Criteria	Weight	Concepts					
		A (Reference) Standard		BDE Master Cart		C+ Front basket Revised	
		Rating	Weighted Score	Rating	Weighted Score	Rating	Weighted Score
Ease of Use	15%	3	0.45	4	0.6	3	0.45
Portability	20%	3	0.6	4	0.8	3	0.6
Capacity	20%	3	0.6	5	1	4	0.8
Storability	15%	3	0.45	3	0.45	3	0.45
Durability	15%	3	0.45	3	0.45	3	0.45
Ease of Manufacture	10%	3	0.3	2	0.2	3	0.3
Customer Appeal	5%	3	0.15	5	0.25	4	0.2
	Total Score		3		3.75		3.25
	Rank		3		1		2
	Continue?		No		Develop		No

Table 4. Concept Scoring Matrix

Final Design and Prototype

Final Design:

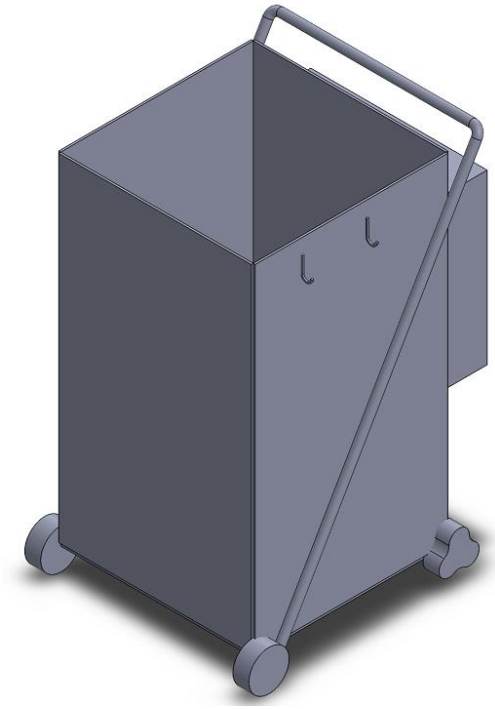

FIG. 3. SolidWorks 3-D Model of Final Design

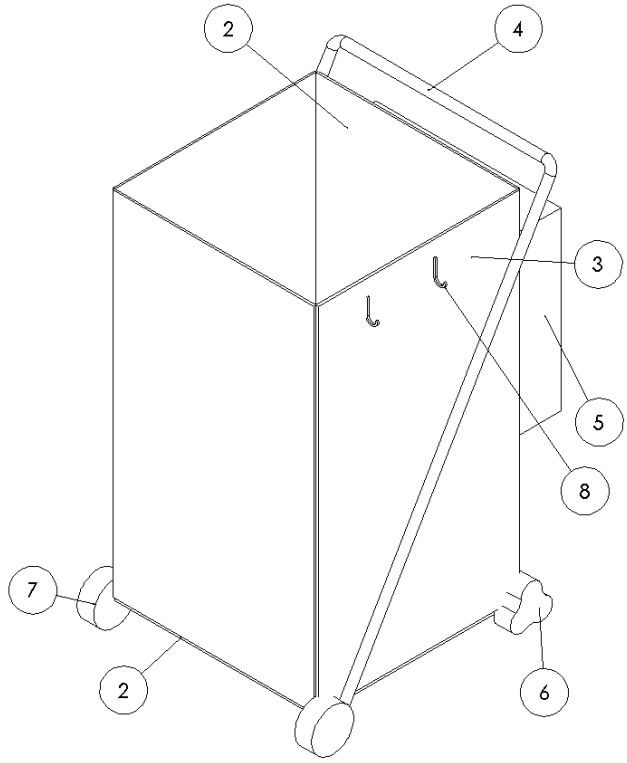

ITEM NO.	PART NAME	manual explode/QTY.
1	base	1
2	side wall	2
3	right side wall	2
4	handle	1
5	bag	1
6	triwheel	2
7	front wheel	2
8	hooks	4

Table 5. Bill of Materials

FIG. 4. Assembly Drawing of Final Design

Detail Drawings:

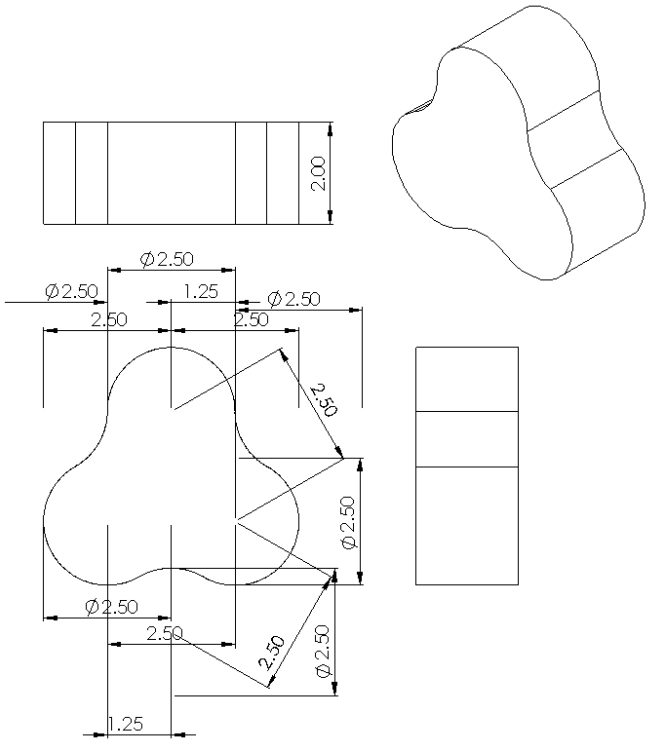

FIG. 5. Detail Drawing of Triwheel

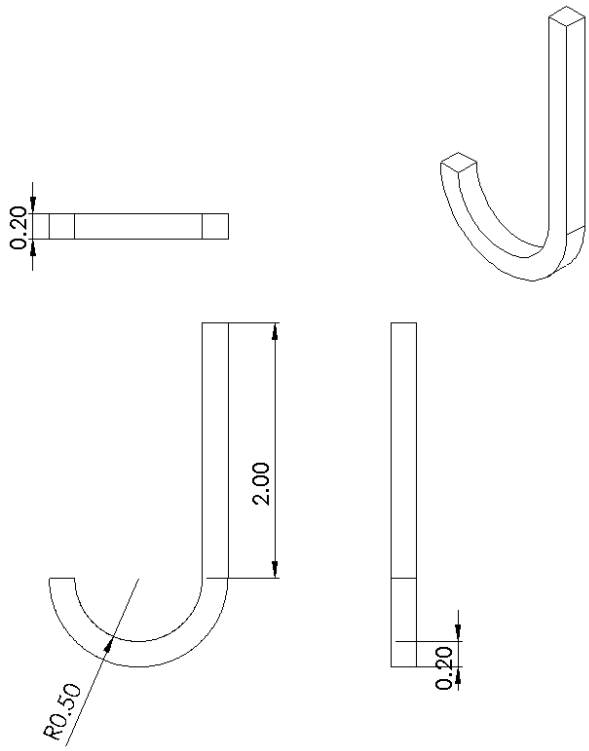

FIG. 6. Detail Drawing of Side Hook

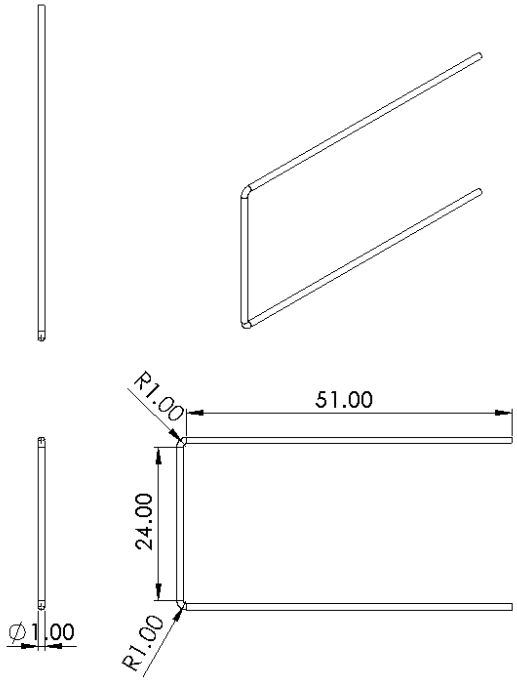

FIG. 7. Detail Drawing of Handle

Prototype:

Note:
Prototype Scale - 1:2

FIG. 8. Image of Prototype

Design Features:

This design contains a simple fold-up mechanism for easy use and storage. The standard multi-direction wheels in the front allow for enhanced mobility while the special triwheels in the back allow for easy ascent up stairs. This feature is especially useful for people living in apartments or residences where groceries must be transported up flights of stairs. The storage bag and the side hooks allow for increased capacity without adding much bulk to the overall structure. The design is lightweight and compact, making it easy to transport to and from the store.

Operation Instructions:

This device is extremely easy to use. Simply remove the device from the box, as it comes already folded up, and lower the front end down to expand the device. Customers can add bags onto the side hooks or put extra groceries in the storage bag to maximize the capacity of the device. To effectively utilize the triwheel feature, customers should simply pull the device up behind them as they travel up the stairs, with the back end facing the stairs.

Engineering Analysis

Working Mechanism:

Unfolded:

The device consists of a rectangular box without the roof as the main body, a woven bag on the back of the box, two hooks on both left and right sides of the box, a handle above the top, and four wheels attached to the bottom of the box. The four wheels consist of two triwheels on the back edge of the bottom frame which help climb stairs and two multi-direction wheels on the front edge of the bottom frame which make turning much easier. The side hooks and the back bag both work to increase the overall capacity of the shopping cart without adding much bulk, which adds to portability as well. The device has a blocking system at the joints of the handle and the box frames to ensure its stability while being used.

Folded:

The folding process is easy by simply unlock the blocking system of the handle and pulling up the front side of the box vertically until it touches the back side of the box. The bag and side hooks can be disassembled and stored in between the two side boards of the box. The device similar to a straight flat board when fully folded, making it highly storable and portable. It is also very easy to carry by grabbing it at either the right or left side, or by wearing it like a backpack, a function made possible by the storage bag straps.

Cost Analysis:

	Box Body & Frames	Handle	Handle Grip	Back Bag	Side Hooks	Front Wheels	Back Wheels
Iron	$0.07~ 0.14/lb	$0.07~ 0.14/lb	X	X	$0.07~ 0.14/lb	X	X
Aluminum	$0.78~ 0.84/lb	$0.78~ 0.84/lb	X	X	$0.78~ 0.84/lb	X	X
Aluminum Alloy	$5~15/set	$5~15/set	X	X	$8.3~ 18.3/set	X	X
Nylon/ Plastic	X	X	$27~ 36 /piece	X	X	$4.24~ 12.15/piece	X
Rubber	X	X	$0.5~ 3.5/piece	X	X	$9.78~ 13.96/piece	$8.99/pair
Cloth	X	X	X	$2.25~ 4.75/piece	X	X	X

Table 6. Cost Analysis of Different Materials for Device Parts

Based on the cost analysis, and with stability and weight in mind, the master cart device parts will be made out of the following materials:

1. Box body and frame: Aluminum
2. Handle: Aluminum
3. Handle grip: Rubber
4. Storage bag: Cloth
5. Side hooks: Aluminum
6. Front wheels: Nylon/plastic
7. Back wheels (triwheels): Rubber

Aluminum, a strong, durable, and cheap material, will serve as the perfect material for the body frame of the device. It will be capable of holding large loads while still remaining lightweight to add to the portability of the device. The front wheels will be made out of plastic and the triwheels will be made out of rubber, increasing the device's mobility and stability. Overall, the material choices for the device will make the device strong and stable while also keeping it relatively inexpensive for the consumer.

Summary and Conclusions

The final design incorporates a simple folding mechanism to make operation very simple for the user. Additionally, the design focuses on maximizing capacity without detracting from the device's portability or storability. The materials that make up the device make it highly compact and durable but also keep it lightweight and inexpensive. The most appealing features of the device, the side hooks, storage bag, and triwheels, add to the device's overall capacity and portability. This design is certainly more marketable than other similar products due to its simple design, easy use, and high portability.

Time constraints did have an impact on the quality of the device prototype. If extra time was available, the prototype would be made of stronger materials than the cardboard and light wood that were used to construct it. The frame would be reinforced with a stronger wood and the wheels would resemble the actual wheels desired for the final design. Additionally, extra time would have allowed for a better way of connecting all of the prototype parts together instead of the simple nail method used in the actual prototype.

This introductory design project taught the basic fundamentals of the design process that engineers use when creating new products. The project reinforced the design process and emphasized time management and group collaboration. Finally, this project enhanced skills in SolidWorks when creating the 3-D model, assembly drawing, and detail drawings of the prototype.

References

"Aluminum Prices and Aluminum Price Charts." *InvestmentMine*. N.p., n.d. Web. 27 Oct. 2013.

"Basic Cloth Bags." *Basic Cloth Bags*. N.p., n.d. Web. 27 Oct. 2013.

"Cast Iron Price Per Pound." *Cast Iron Price Per Pound*. N.p., n.d. Web. 27 Oct. 2013.

"Cosmos Pair of Replacement Stair Climbing Shopping Cart Wheels with Cosmos Fastening Strap." *Amazon.com*. N.p., n.d. Web. 27 Oct. 2013.

"Nylon Grip Price." *Nylon Grip Price,Nylon Grip Price Trends-Buy Low Price Nylon Grip at Factory Price on Aliexpress.com*. N.p., n.d. Web. 27 Oct. 2013.

"Showroom Minerals & Metallurgy Aluminum Aluminum Profiles Aluminum Frame: 1,176,136 Products Found from 6653 Suppliers Manufacturers." *Aluminum Frame, Aluminum Frame Products, Aluminum Frame Suppliers and Manufacturers at Alibaba.com*. N.p., n.d. Web. 27 Oct. 2013.

"Showroom Rubber & Plastics Rubber Products Other Rubber Products Rubber Hand Grip: 9,151 Products Found from 529 Suppliers Manufacturers." *Rubber Hand Grip, Rubber Hand Grip Products, Rubber Hand Grip Suppliers and Manufacturers at Alibaba.com*. N.p., n.d. Web. 27 Oct. 2013.

"Tools & Home Improvement." *Amazon.com Home Improvement: Lawn & Garden, Renovate & Repair, Tools, Garden Tools, Woodworking, Lawn Mowers, Plumbing, Lighting, Saws, Drivers, Wrenches & More*. N.p., n.d. Web. 27 Oct. 2013.