Code of Cooperation

- EVERY member is responsible for the team's progress and success.
- Attend all sessions and be on time.
- Listen to and show respect for the contributions of other members; be an active listener.
- Criticize ideas, not persons.
- Resolve conflicts constructively.
- Pay attention - avoid disruptive behavior.
- Avoid disruptive side conversations.
- Only one person speaks at a time.
- Everyone participates -- no one dominates.
- Be succinct, avoid long anecdotes and examples.
- No rank in the room.
- Attend to your personal comfort needs at any time but minimize team disruption.
- HAVE FUN.

Adopted from the Boeing Commercial Airplane Group

The Stages of Design

I. Recognition of the Need

   A. Market Pull
   B. Technology Push

II. Definition of the Problem

III. Gathering Information

IV. Conceptualization

   A. Brainstorming

V. Decision Matrix - Evaluation

VI. Analysis and Design

VII. Construct and Test Prototypes

VIII. Communication of Design

   A. Verbally
   B. Graphically
   C. Written

BRAINSTORMING

Process of generating ideas by stimulating a free flowing rapid production of thoughts

- **Setup: Environment and topic background**
  - Be open
  - Be creative
  - Be positive

- **Stage 1: Throw out ideas**
  - No idea is excluded
  - No criticism or analysis at this point
  - Keep moving
  - Keep on the topic
  - Adapt or add to existing ideas

- **Stage 2: Narrow down the ideas**
  - Analyze the existing ideas
  - Decide applicability
  - Decide feasibility
  - Criticize constructively
  - Choose 10 to develop

- **Stage 3: Develop the ideas**
  - Produce scenarios for each
  - Build up ideas to workable form
  - Reevaluate all aspects of each
  - Attempt to foresee problems

- **Stage 4: Pick one idea**
  - Base evaluation on stage 2 criteria
  - Weigh pros and cons of each idea
  - Compare ideas from stage 3
  - Discuss choices and agree upon one

- **Stage 5: Follow through with idea**
  - Make working adaptations as needed
  - Feel free to redo this process with different problems that may occur

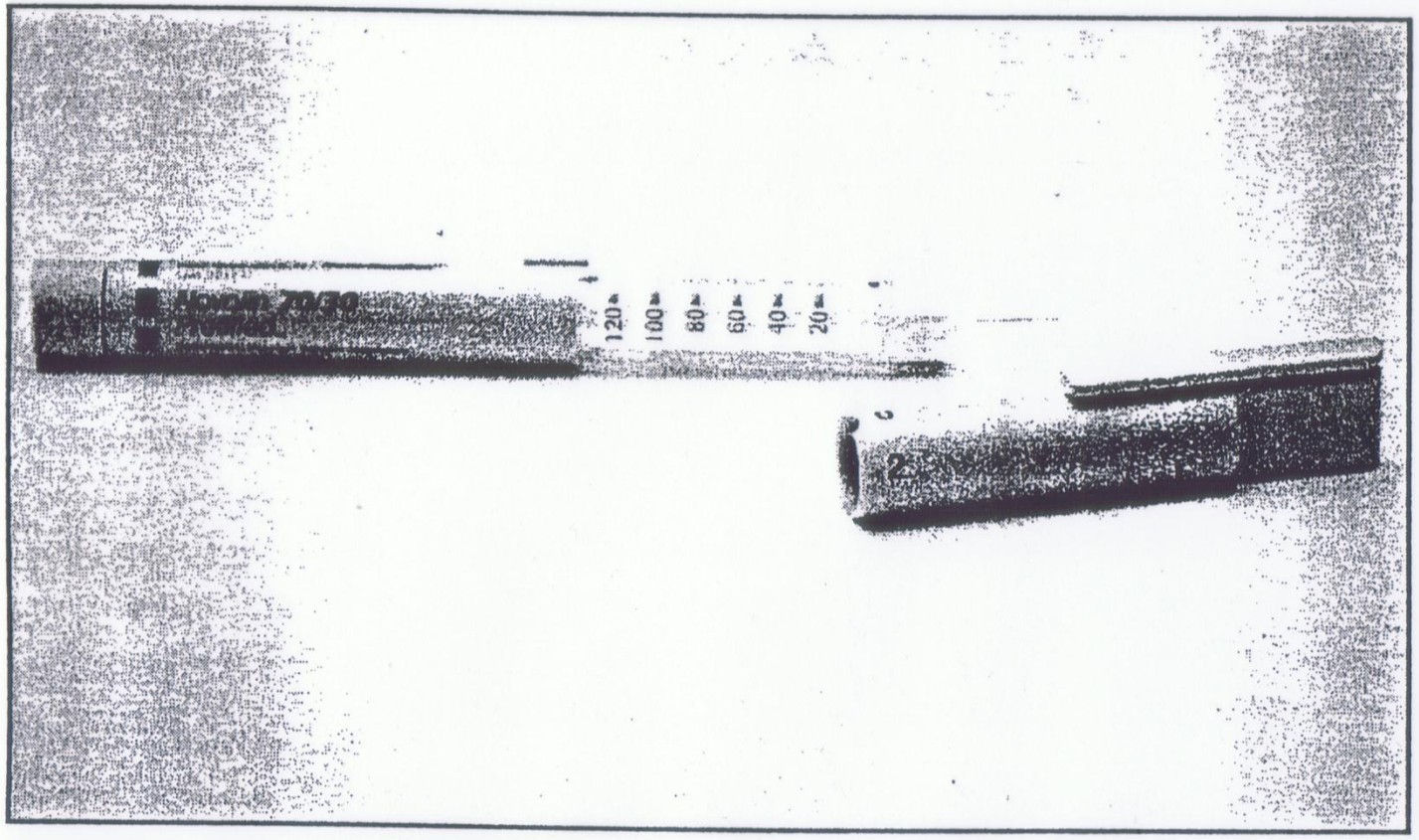

EXHIBIT 1 One of the existing outpatient syringes. (Courtesy of Novo Nordisk Pharmaceuticals Inc.)

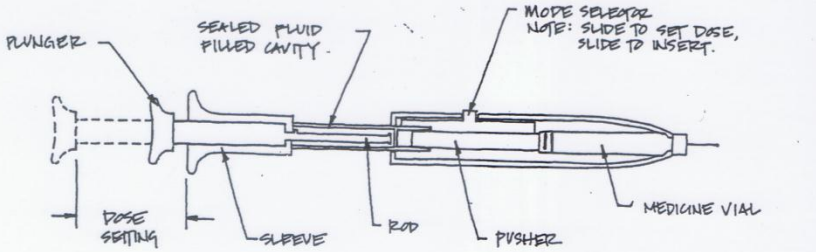

Concept A: Master Cylinder

NOTE: CROSS SECTIONAL AREA of ROD 1/11 of CAVITY → PUSHER DISPLACEMENT = 1/11 of PLUNGER DISPLACEMENT

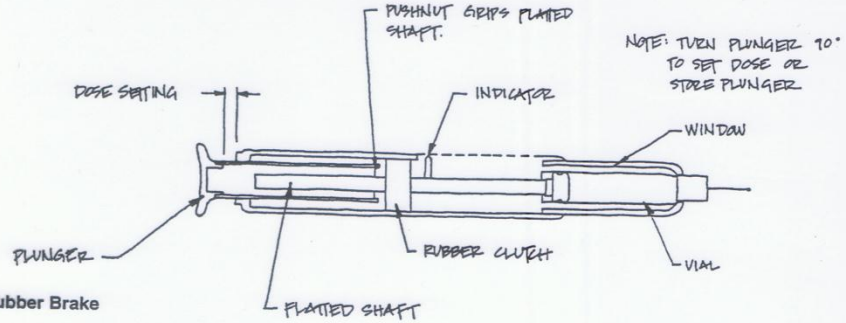

Concept B: Rubber Brake

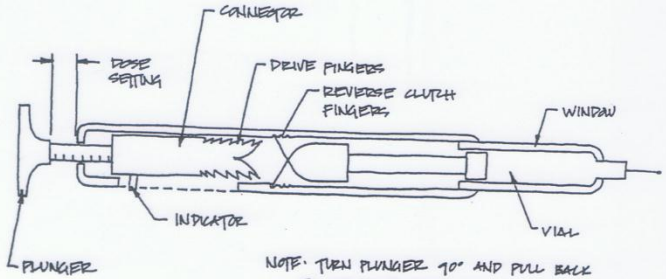

NOTE: TURN PLUNGER 90° AND PULL BACK TO SET DOSE. TURN BACK TO ENGAGE CONNECTOR

Concept C: Ratchet

EXHIBIT 2
Seven concepts for the outpatient syringe. The product development team generated the seven sketches to describe the basic concepts under consideration.

NOTE: SCREW SLEEVE FORWARD TO SET DOSE. INJECT WITH PLUNGER

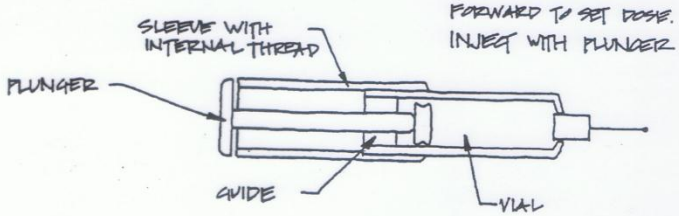

Concept D: Plunge Stop

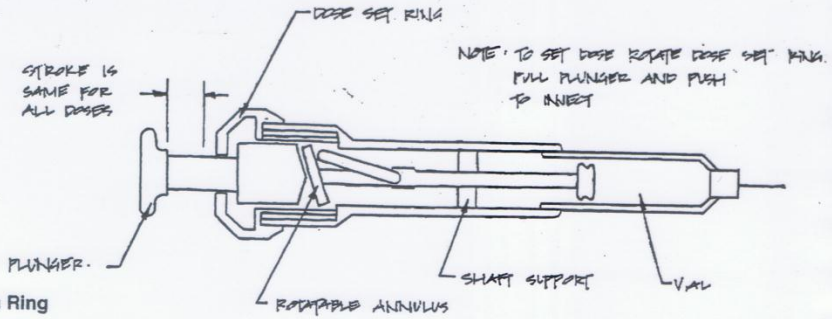

Concept E: Swash Ring

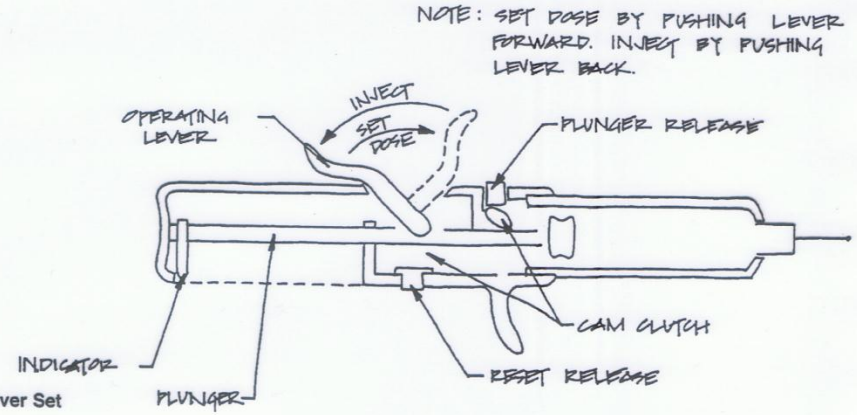

Concept F: Lever Set

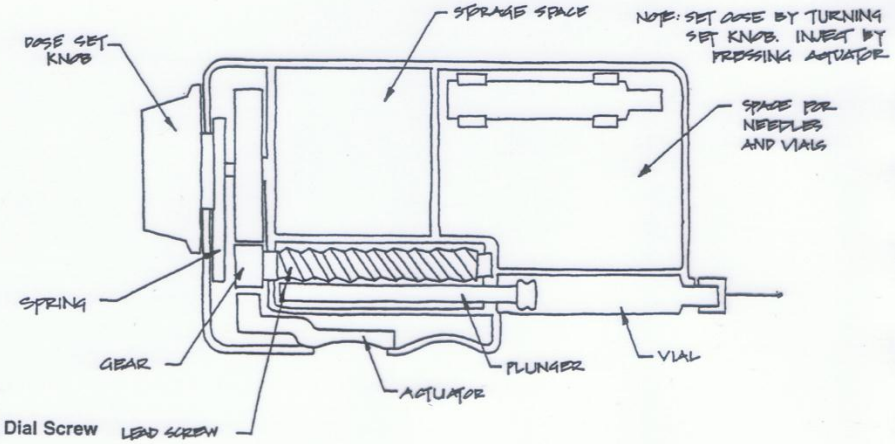

Concept G: Dial Screw

Selection Criteria	Concepts						
	A Master Cylinder	B Rubber Brake	C Ratchet	D (reference) Plunge Stop	E Swash Ring	F Lever Set	G Dial Screw
Ease of handling	0	0	–	0	0	–	–
Ease of use	0	–	–	0	0	+	0
Readability of settings	0	0	+	0	+	0	+
Dose metering accuracy	0	0	0	0	–	0	0
Durability	0	0	0	0	0	+	0
Ease of manufacture	+	–	–	0	0	–	0
Portability	+	+	0	0	+	0	0
Sum +'s	2	1	1	0	2	2	1
Sum 0's	5	4	3	7	4	3	5
Sum –'s	0	2	3	0	1	2	1
Net Score	2	–1	–2	0	1	0	0
Rank	1	6	7	3	2	3	3
Continue?	Yes	No	No	Combine	Yes	Combine	Revise

EXHIBIT 5 The concept screening matrix. For the syringe example, the team rated the concepts against the reference concept using a simple code (+ for "better than," 0 for "same as," – for "worse than") in order to identify some concepts for further consideration. Note that the three concepts ranked "3" all received the same score.

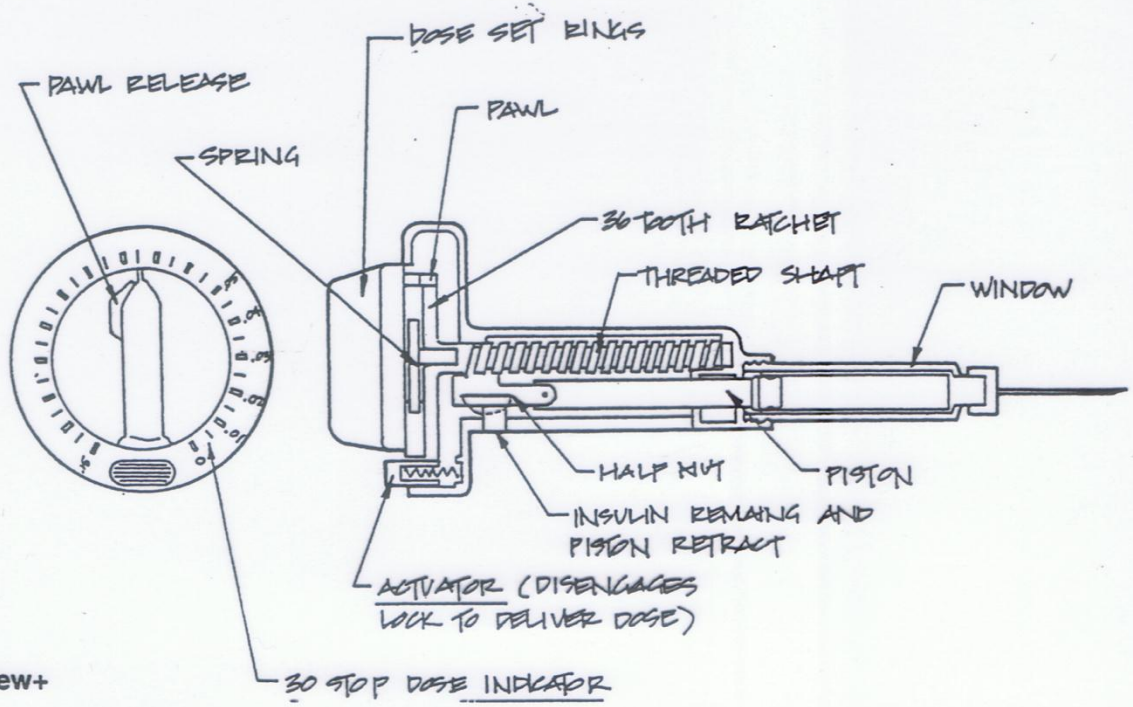

Concept G+: Dial Screw+

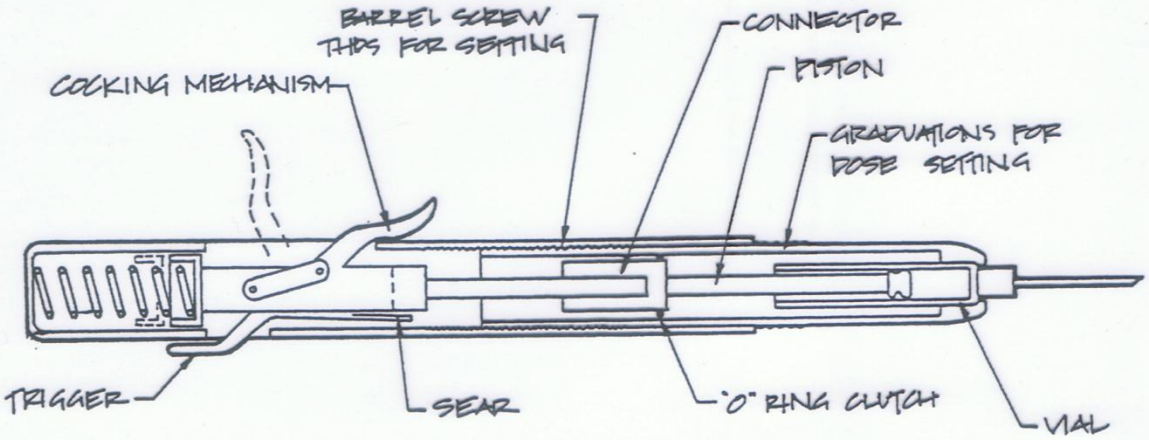

Concept DF: Lever Stop

EXHIBIT 6 New and revised concepts for the syringe. During the selection process, the syringe team revised concept G and generated a new concept, DF, arising from the combination of D and F.

Selection Criteria	Weight	Concepts							
		A (reference) Master Cylinder		DF Lever Stop		E Swash Ring		G+ Dial Screw+	
		Rating	Weighted Score	Rating	Weighted Score	Rating	Weighted Score	Rating	Weighted Score
Ease of handling	5%	3	0.15	3	0.15	4	0.2	4	0.2
Ease of use	15	3	0.45	4	0.6	4	0.6	3	0.45
Readability of settings	10	3	0.3	3	0.3	5	0.5	5	0.5
Dose metering accuracy	25	3	0.75	3	0.75	2	0.5	3	0.75
Durability	15	3	0.45	5	0.75	4	0.6	3	0.45
Ease of manufacture	20	3	0.6	3	0.6	2	0.4	2	0.4
Portability	10	3	0.3	3	0.3	3	0.3	3	0.3
Total Score			3.00		3.45		3.10		3.05
Rank			4		1		2		3
Continue?			No		Develop		No		No

EXHIBIT 4 Concept selection is an iterative process leading to a single concept upon which subsequent development activities will be focused.

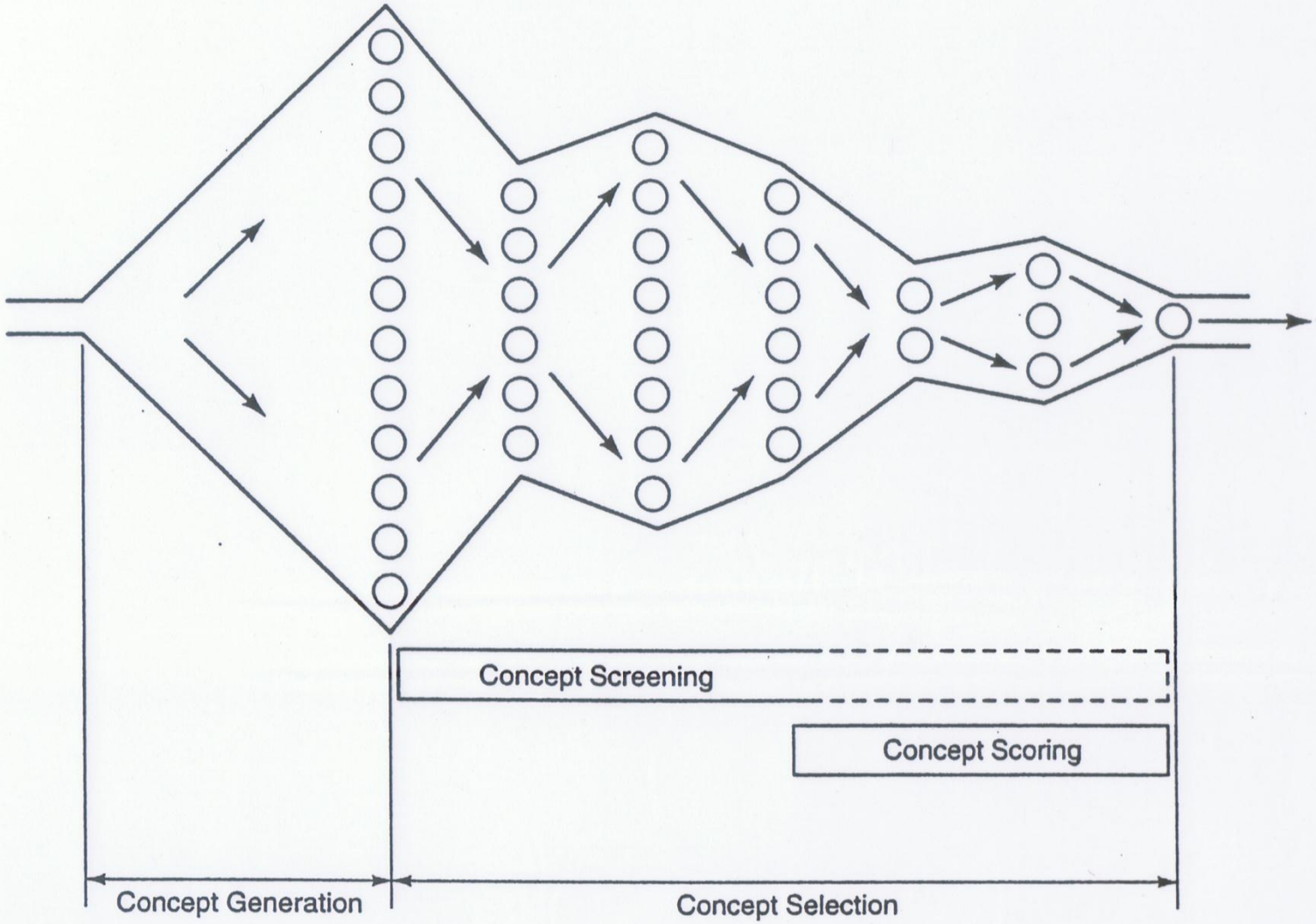

Gantt Chart

Identify Needs	Customer Needs Statement
	Mission Statement
	Market Assesment
Specifications	Gantt Chart
	Division of Labor
	Target Specifications
Brainstorming	Brainstorming
Concept Selection	Evaluation
	Decision Matrix
	Cost Evaluation
Prototype	Cad Design
	Web Page
	Solid Model
Present	Oral Presentation

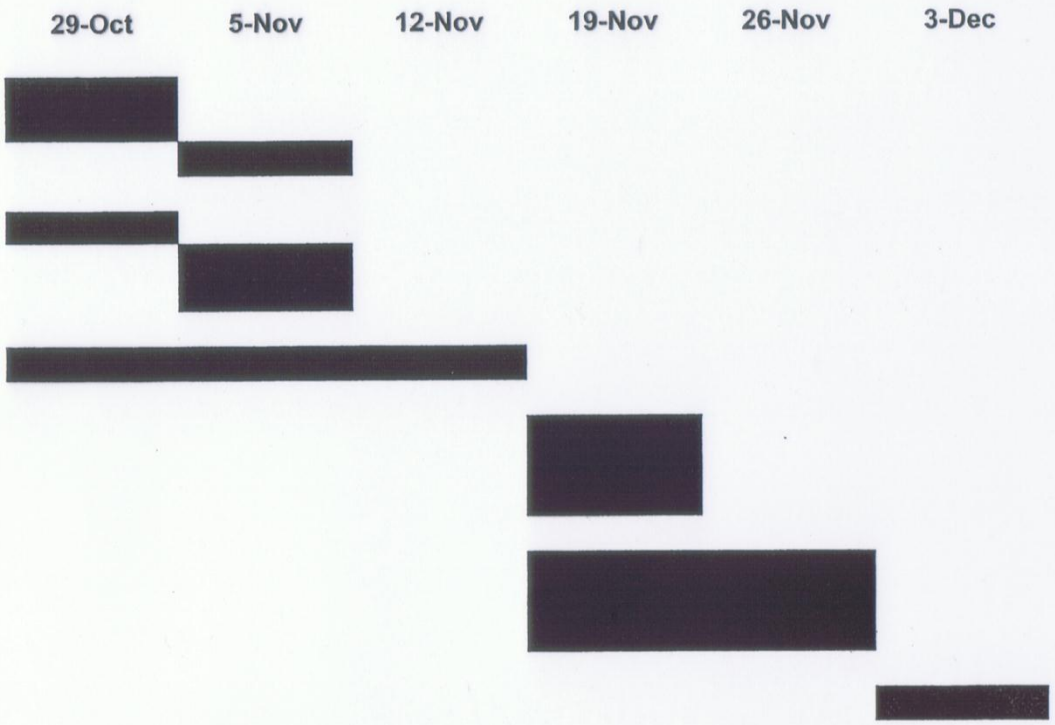

DESIGN PROJECT COST

Section: _____ Date: _____

Group # _____ Design Week: _____

Description of items	Cost

TOTAL COST