EDSGN 100
Section 15, Team #4
Roof Watering System

Submitted by: ***Waleed Alhayaza***, ***Quinn Opalka***, ***Joseph Farabaugh***,
Daniel McConnell, ***Weilin Ma***

Submitted to: Xinli Wu
(prototype picture)
Fall, 2013

Table of contents

Topic	*Page*	*Written by*
Cover page		*Waleed Alhayaza*
Abstract Summary	***1***	*Waleed Alhayaza, Quinn Oplaka*
Introduction	***1***	*Waleed Alhayaza*
Problem statement	***2***	*Joseph Farabaugh, Daniel McConnell, Waleed Alhayaza.*
Mission Statement	***2***	*Daniel McConnell, Joseph Farabaugh, Waleed Alhayaza.*
Design Specifications	***2***	*Waleed Alhayaza*
Project Management (Gantt chart)	***3***	*Daniel McConnell*
Concept Generation	***4***	*Waleed Alhayaza*
Design Selection matrices	***5***	*Waleed Alhayaza*
Design	***6-7***	*Joseph Farabaugh, Weilin Ma*
Assembly Drawing/ Bill of Materials	***8***	*Joseph Farabaugh.*
Working Mechanism	***9***	*Weilin Ma*
Cost Analysis	***9***	*Daniel McConnell*
Key features	***9***	*Group work*
Presentation materials (pictures)	***10-11***	*Waleed Alhayaza*
Conclusion	***10***	*Waleed Alhayaza*
Acknowledgements	***10***	*Joseph Farabaugh.*
Prototype made by		*Joseph Farabaugh, Quinn Oplaka.*
Brochures made by		*Waleed Alhayaza*
Powerpoint presentation		*Joseph Farabaugh, Daniel McConnell*
Overall design editor		*Waleed Alhayaza*
References		

Abstract Summary

This design project focused on constructing a watering system out of aluminum for a green roof. Some of the key features are that it's sustainable, eco-friendly,and recyclable. The system is ideal because it will save money for the dining commons by producing some of the food that they need.

Introduction

In a partnership between Penn State University and ALCOA, students in different Engineering Design classes were assigned to identify opportunities across the campus or the city to take the advantage of Aluminum's properties to increase the efficiency and the sustainability of products on campus or on the city. In doing so, students were arranged in groups and a research was conducted to find information about the products around the campus and the city that can be replaced with Aluminum to increase its efficiency and sustainability as well as the intrinsic properties of Aluminum. After considering all the above a watering system was decided on. Different concepts for the watering system were created and sketched with the best being determined by overall score in a concept scoring matrix. This concept then was developed and a SolidWorks model was constructed. Finally, a sample of the watering system was constructed with a ½ scale.

Problem Statement

The problem was presented by Alcoa company to use the advantages of aluminum to increase the efficiency or sustainability of a product or product system on campus. The design must demonstrate the advantages of aluminum's qualities through sustainability, strength, cost efficiency, and other properties that define it.

Mission Statement

This mission was to design and use an environmentally friendly and sustainable gridded watering system made out of aluminum to add to the tops of buildings. The purpose of the design is to add a spark of nature to a crowded town by inspiring our campus and the world to become a more eco-friendly place. This means an aesthetically pleasing environment from a bird-eye view and also provides an organic and cheap food source to our fellow students around campus.

Design Specifications

The design must take the advantage of the aluminum's intrinsic properties across the campus in order to:

1- Increase the efficiency of the product and the product systems.

2- Increase the sustainability of the product and the product systems.

Gantt chart:

In order to split the work evenly and complete the project by the required due date, we followed this chart.

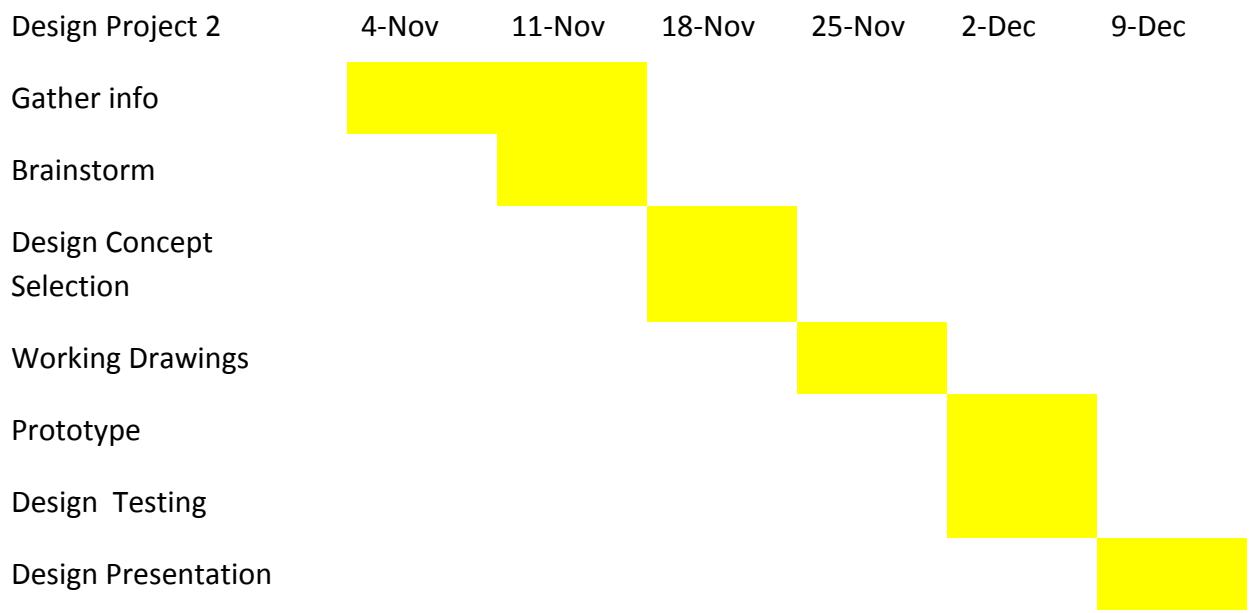

Concept Generation

After considering the problem definition, the design specifications, and gathering information about materials on campus and on the city that can be created or replaced by aluminum to increase the efficiency and the sustainability.

Ideas	Votes out 5
Bicycle racks made out of aluminum	3
Shelves made out of aluminum.	4
Green roof for the top of Millennium building.	5
Gridded heating system in road	4
Appliances for dorms	2
Shingles	3

Design Selection matrices:

After choosing the best ideas that meet the design specifications, we ranked them again to narrow the number of concepts and to choose the best concept with the best features. The selection matrix that we used is on scale of "better than" (3), "same as" (2) and "worse than" (1)

	Design #1	Design #2	Design#3	Design#4	Design#5	Design#6
Cost	3	1	3	1	1	1
Sustainability	2	3	3	2	2	2
Eco-friendly	3	3	3	2	3	3
Efficiency of the product	1	2	2	3	2	2
Beauty (uniqueness)	2	1	3	1	1	1
Ease of use	2	2	3	1	3	2
Total	13	13	17	10	12	11

Design #1: Bicycle racks made out of aluminum. Design #2: Shelves made out of aluminum. Design #3: Green roof for the top of Millennium building. Design #4: Gridded heating system in road. Design #5: Appliances for dorms. Design #6: Shingles.

Working Drawings

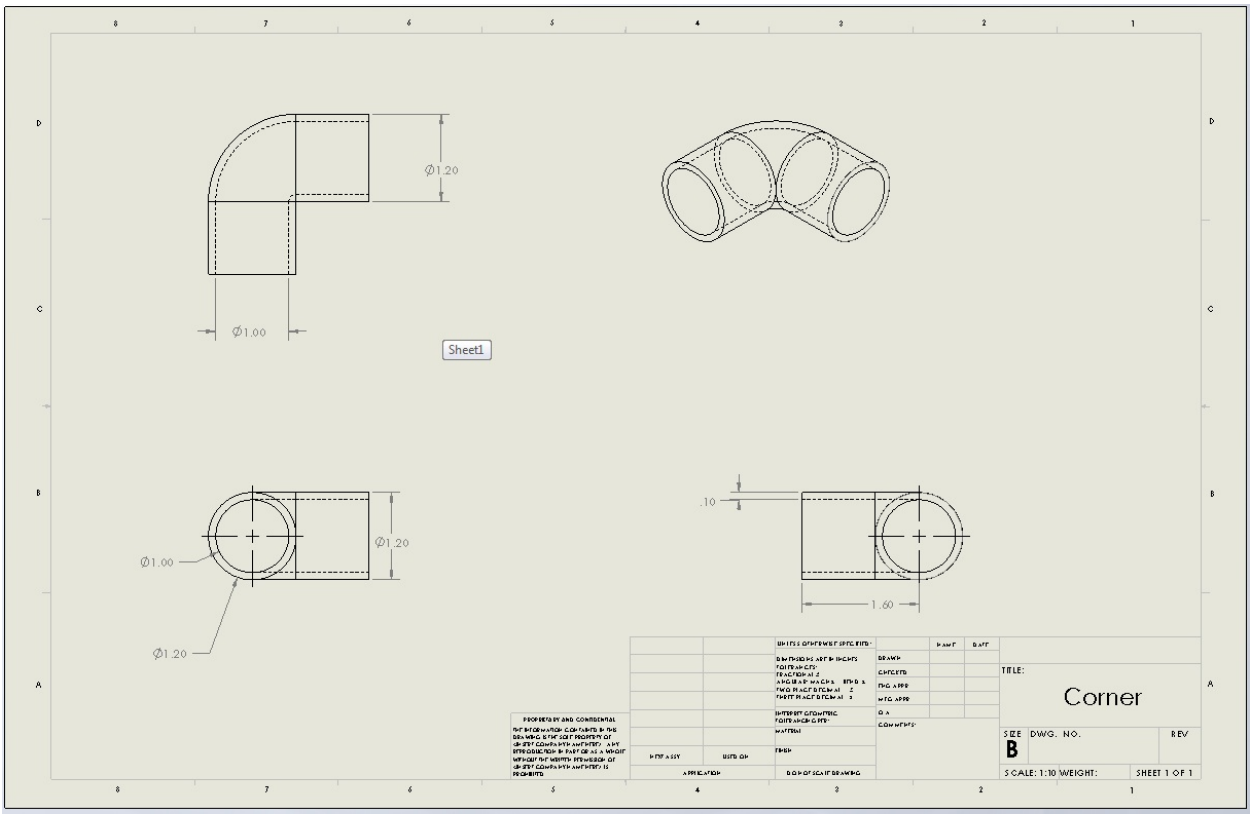

7

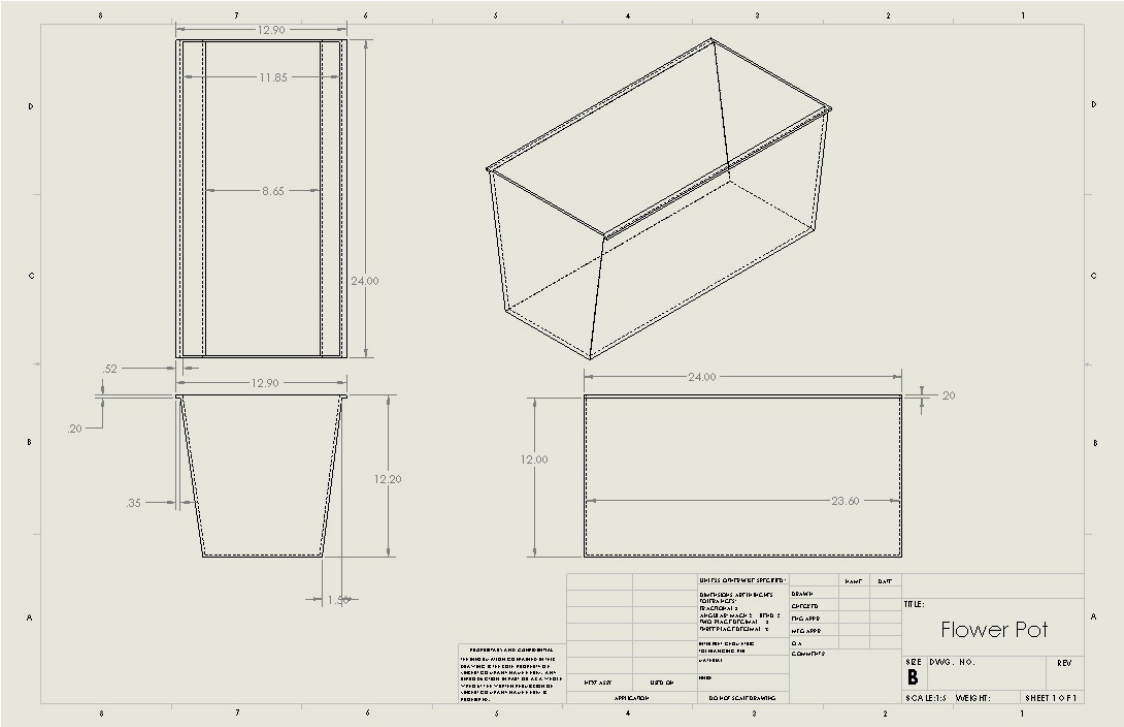
12.90
11.85
8.65
24.00
.52
12.90
.20
12.20
.35
1.50
24.00
.20
12.00
23.60
TITLE:
Flower Pot
SIZE
B
DWG. NO.
REV
SCALE:1:5
WEIGHT:
SHEET 1 OF 1

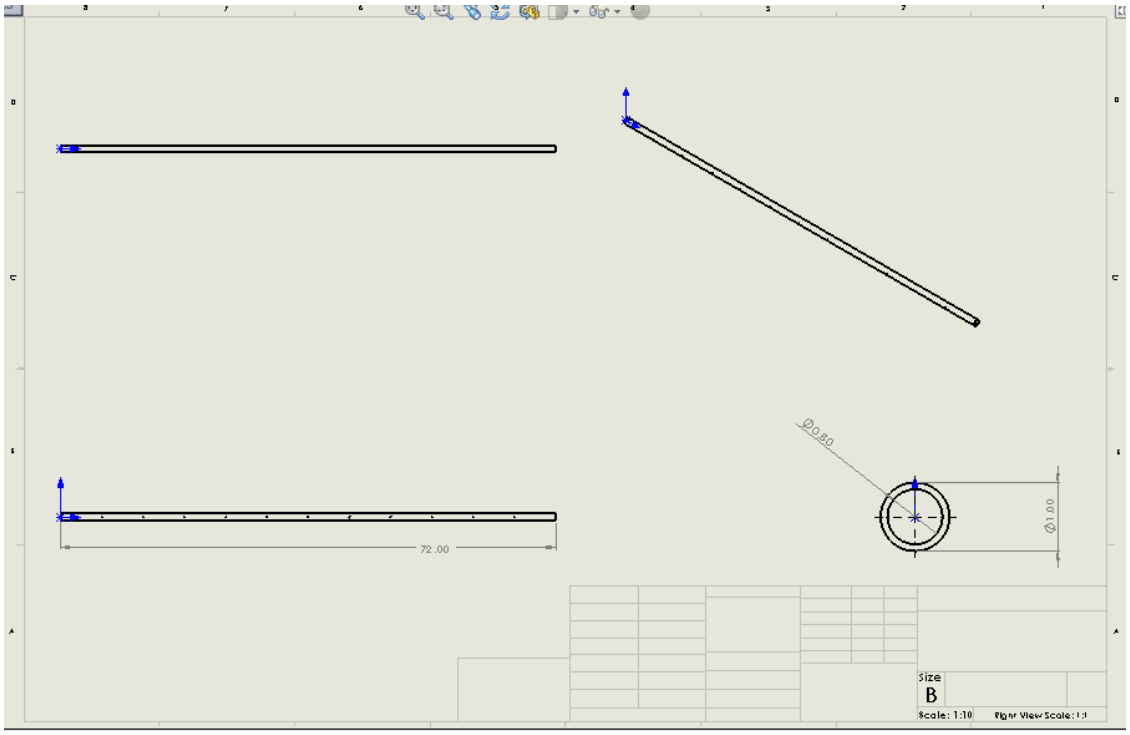
Ø0.80
Ø1.00
72.00
Size
B
Scale: 1:10

Assembly View/ Bill of Materials:

ITEM NO.	PART NAME	QUANTITY	MATERIAL
1	Frame	3	Aluminum
2	Corner	4	Aluminum
3	Ts	3	Aluminum
4	Pipe 2 hole	1	Aluminum
5	Pipe 1 hole	2	Aluminum
6	Small Pipe	3	Aluminum
7	Small Piece	2	Aluminum
8	flower pot 12	2	Aluminum
9	flower pot 18	1	Aluminum
10	flower pot 6	3	Aluminum

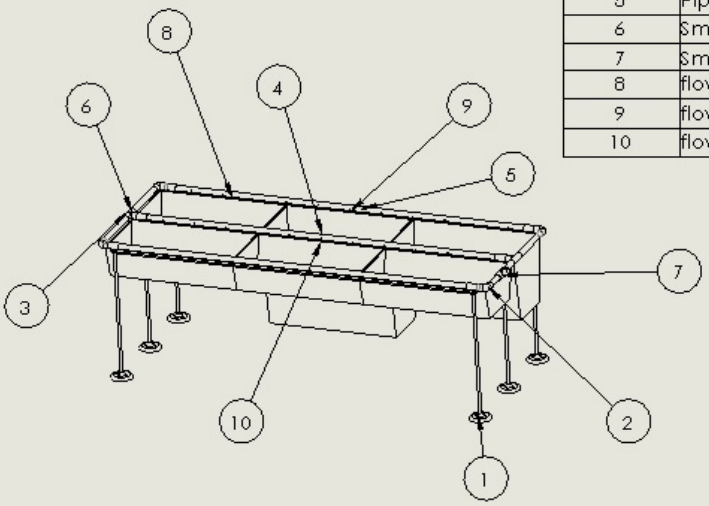

UNLESS OTHERWISE SPECIFIED:

DRAWN

CHECKED

ENG APPR

MFG APPR

Q A

COMMENTS:

TITLE:
EDSGN 100, Section 15
TEAM 4
Assembly Drawing

SIZE A

DWG. NO. Watering System

REV

SCALE: 1:20 WEIGHT:

SHEET 1 OF 1

APPLICATION

DO NOT SCALE DRAWING

5 4 3 2 1

Key Features:

1-Grows produce for dining halls

2-Reuses rainwater.

3-Saves water consumption by directly feeding plants

4-Resists corrosion

5-Light weight

6-Easy assembly

Working Mechanism

The project is an eco-efficient irrigation system. It's a set of flower pots sliding on all-aluminum made pipes with a rain container built upon the roof of the buildings. The flower pots can slide along the aluminum pipe tracks to form massive sized images according to the users. This system also has columns holding up the pipes at the same level above the ground. There are many holes along both sides of the pipes for water to import into the flower pots as an irrigation system. Rain water collected by the rain container can also supply the system. Water will run through the pipes cyclically to prevent any kind of waste.

Cost Analysis:

6 ft Aluminum piping	$14.88 per unit
Aluminum (flower pots and supports)	$0.80 per pound

Presentation materials:

The prototype shows PSU written with white floors, the flower pots should be on the top of roof on the Millennium building.

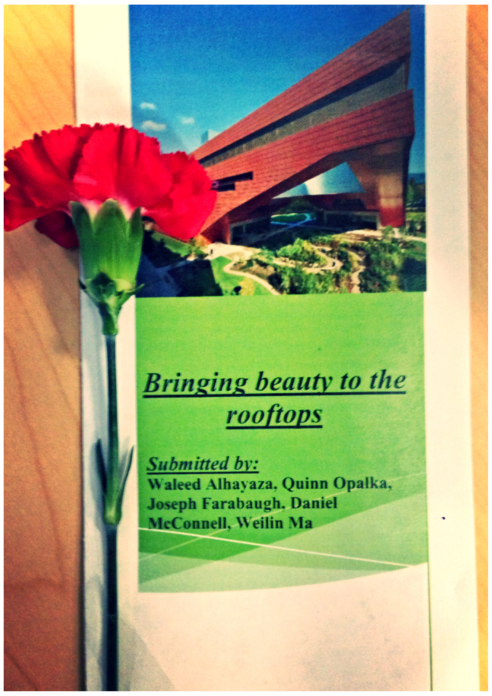

Flowers were added to the brochure to represent the beauty of the project in an animated way.

Overall picture of the presentation materials.

Conclusion:

In conclusion, we aimed to make a product that uses the intrinsic properties of aluminum to increase the efficiency and the sustainability of the campus. To access this, a research was conducted, and all of the data were collected and added to a design selection matrices. By doing so, the best design idea was selected and developed. A prototype for the design was created and presented.

The project system adds beauty and life to the campus and the city. Furthermore, the project saves money for the dining halls and also provides a more efficient watering system. Moreover, our project is going to be able to take down in the winter or during bad weather. To do so, a cover will be added to the system, or a greenhouse in other words.

Acknowledgements:

We would like to thank Penn State University for the lab space and use of computers. We would also like to thank Xinli Wu for teaching us the technical uses and programs when it came to finalizing the project.

References :

- Alcoa