EDSGN 100: Introduction to Engineering Design

Section 09, Team 6

ROTATING ASSEMBLY

Submitted by: Eric Yamada, Emily Zaczkiewicz, Divya Avnoor, and Weizhi Liao

Submitted to: Xinli Wu

FALL 2015

http://www.personal.psu.edu/wbl5038/Project_I/edsgn100_fa15_section09_team6_project1.pdf

Abstract

The purpose of this project was to make a dumpling maker that is small, fast, user-friendly, and cost efficient. After analyzing customer needs, we have built the Rotating Assembly which fits all the required specifications and is both efficient as well as economical.

Table of Contents

Cover Page ……... (Emily)

Abstract ……. ii (Divya)

Table of Contents ……. iii (Weizhi)

Introduction ……... 1 (Emily)

Description of the Design Task ……..2 (Divya)

Design Approach ……3 (Emily)

The final Design and its Prototype ……8 (Weizhi)

Engineering Analysis ……17 (Eric)

Summary and Conclusions ……18 (Eric)

Acknowledgement ……19 (Emily)

References ……19 (Emily)

I. Introduction

To produce a fully functional, efficient dumpling maker, one must completely understand the traditional method of dumpling making. Dumplings have originated more than 1,800 years ago, being invented during the Han Dynasty by an individual named Zhang Zhongjian.[1] This process is follows four simple steps: rolling, cutting, filling, and folding. While each step is simple and can be done fairly easily, combining these steps can prove to be challenging. This process has been occurring for quite some time, and the same standards of making a dumpling have not changed. The only problem is that while time progresses, the process must evolve to meet the demands of a society that wants instant gratification.

The challenge of designing a machine that can mimic these steps sparked the ingenuity and creativity of four young, up and coming engineers. These students worked tirelessly to achieve a machine that both upholds the tradition of dumpling-making that is almost two thousand years old and integrate a new and innovative technique of manufacturing these timeless delicacies.

The design, although quite simple in structure, has a sleek shape and an efficiency that produces dumplings much faster than by human hands. Each component has been designed to meet specific customer specifications, and the assembly incorporates multiple ideas into the best combination of features from various designs. The materials for consumption move through each component while rotating on a moving conveyor belt, so the name "Rotating Assembly" came to mind. The students expanded this idea to create the final design, which is suitable for both households and small restaurants.

The customers requested that the final product be compact, affordable, and efficient, but the Rotating Assembly exceeds these expectations. The creativity and collaboration of engineering students has produced a functional machine that will open up a new wave of dumpling making into the future.

II. Description of Design Task

I. Problem Statement

Existing dumpling makers were too large for a small restaurant with a budget. There was a need for an economically feasible dumpling maker that is easy to assemble and use and at the same time is also efficient.

II. Mission Statement

The goal was to produce a dumpling maker that is easy to manufacture and assemble and also meets all customer expectations. That is, it is cost efficient, fast and compact.

III. Design Specifications

The team has strictly followed the specifications and the rotating assembly has all of the following features:

• The dumpling maker should be automatic or semi-automatic.

• The dumpling maker should produce no less than 10 dumplings per minute on average.

• The material cost for the dumpling maker should not exceed $200 unless it can be justified.

• The dumpling maker should be safe as a food processor, easy to maintain, safe to use and dishwasher safe.

III. Design Approach

I. Project Manager- Gantt Chart

Over the course of the past two months, the team has gone through the design process, which includes brainstorming, designing, building, and presenting. Figure 1 shows the timeline and number of days spend for each part of the chosen design process taken by the team.

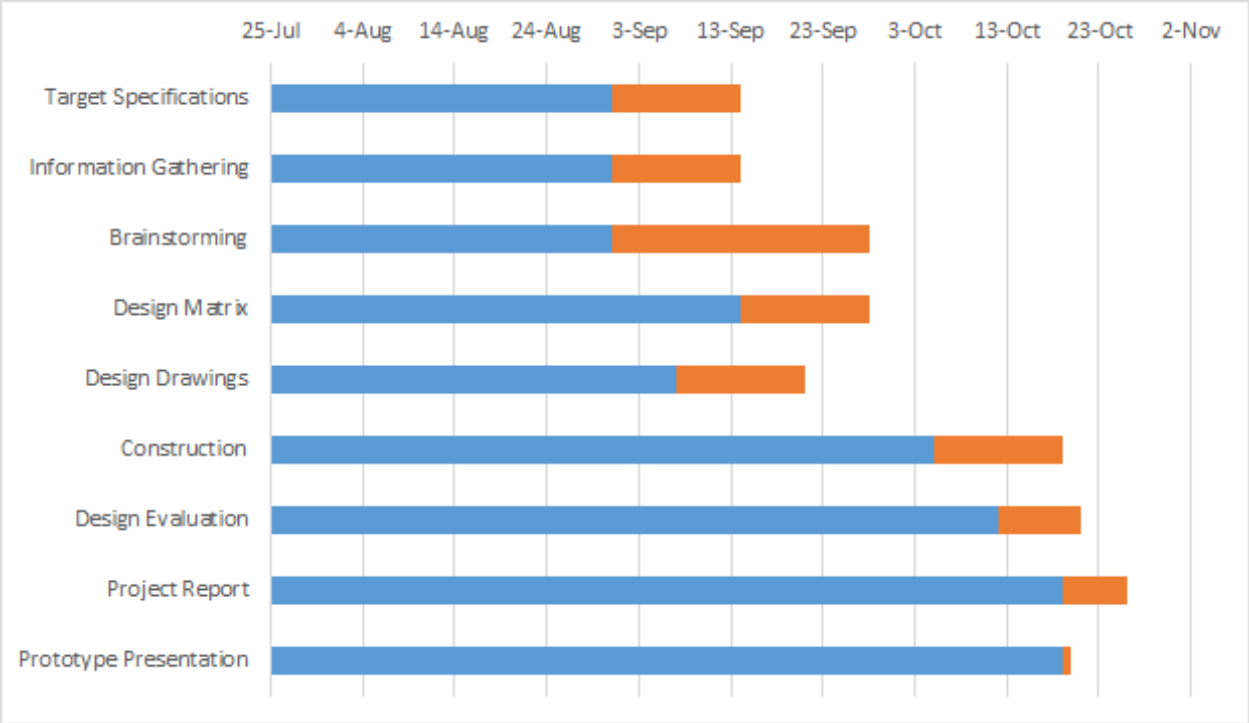

FIG. 3.1 Gantt Chart

II. Customer needs assessment

Customers were contacted in both Corry, Pennsylvania and Waterford, Pennsylvania. The spokespeople for the restaurants in these areas were in agreement with the size and efficiency of the dumpling maker. They requested that the design be small and compact, in order to fulfil the needs of their relatively small restaurants. Table 1 illustrates the specifications of both restaurants. The design of the Rotating Assembly met the requirements of these small restaurants, as opposed to a much bigger client. Since both restaurants hand made their dumplings, they wanted something that still gave the food a homemade look.

	China Jade (Corry, PA)	Maggie's China Inn (Waterford, PA)
Way of making dumplings	By hand	By hand
Number of orders of dumplings per day	20	15-20
Most desired feature	Compact	Speedy
Amount willing to pay for dumpling maker	$200 or less	$400 or less

Table 3.2 Customer Needs Assessment

III. Concept Generation

Over the course of the brainstorming period, five designs were implemented. All the designs utilized various ideas to demonstrate efficiency, compactness, durability, and numerous other features.

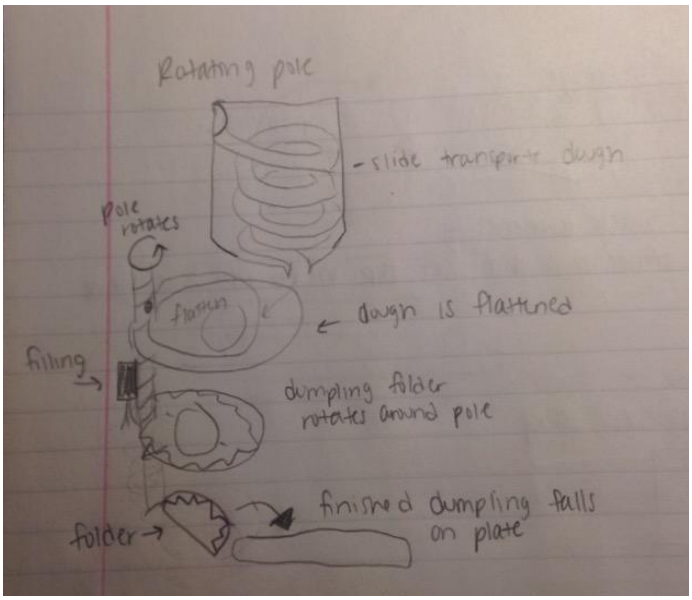

FIG. 3.3.1 Rotating Pole

Figure 3.3.1 is the Rotating Pole Assembly. This assembly made use of a rotating pole that carried the dumpling process out in a downward spiral fashion. Though quick and efficient, the design was not compact and was not practical, due to the heavy weight and little structural support.

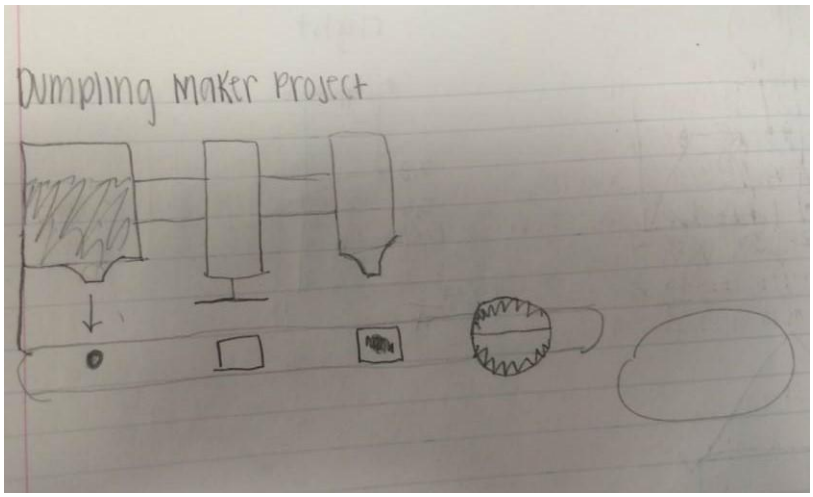

FIG. 3.3.2 Conveyor Belt

Figure 3.3.2 is the Conveyor Belt design. This design was the simplest out of all the designs. The constant-moving conveyor belt lead to a high product efficiency and speed, but the simplistic design was not compact, nor did it account for all processes of making the dumplings.

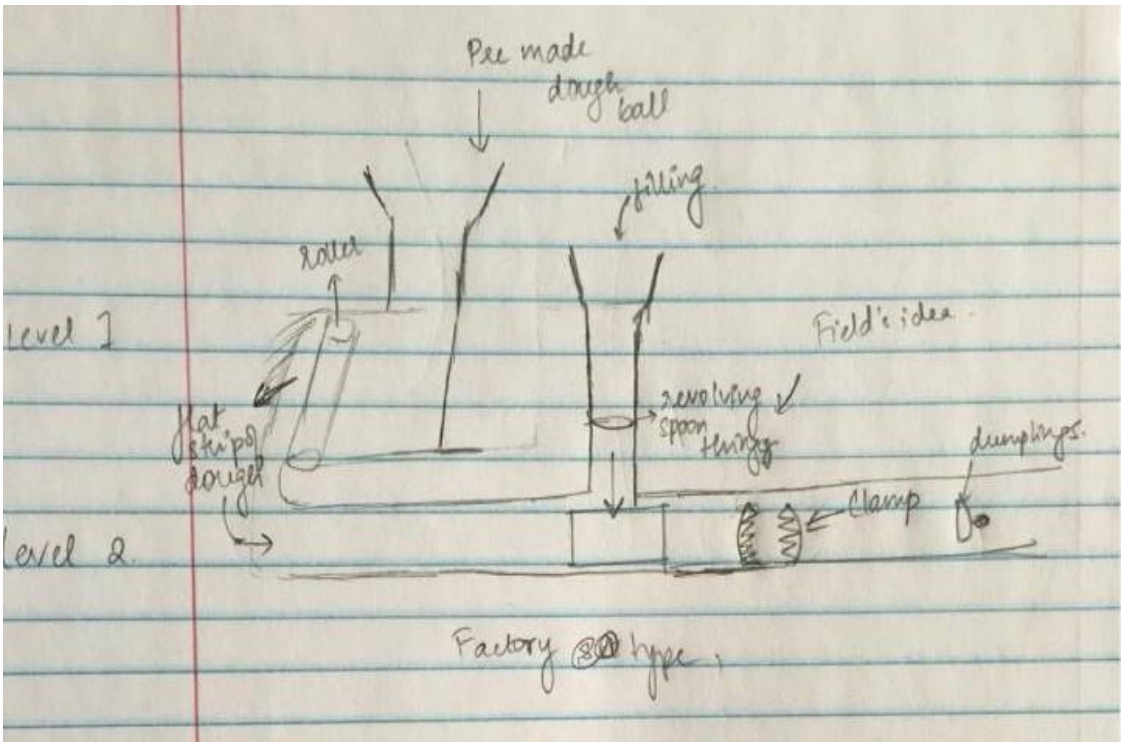

FIG. 3.3.3 Factory Type

The next design, as illustrated in Figure 3.3.3, is called Factory Type. The design was both durable and user-friendly, but the size was too big for customer standards. This design needed the most modifying out of all designs in order to satisfy the customer needs.

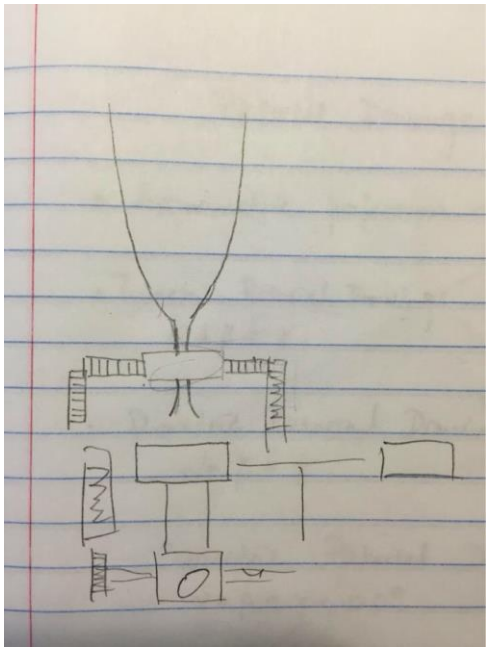

FIG. 3.3.4 S-Gears

The design in Figure 3.3.4, S-Gears, was both compact and efficient. The design varied in the filling and wrapping of the dough for the dumpling, but was not very durable. The intricate gears also made the machine difficult to handle for consumers.

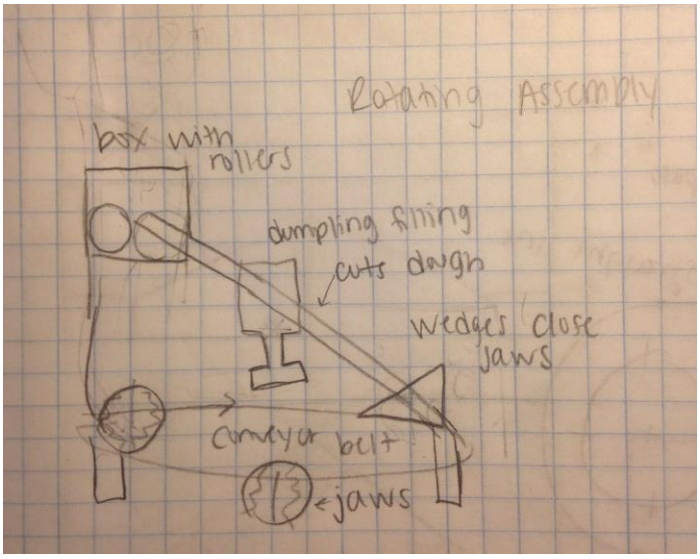

FIG. 3.3.5 Rotating Assembly

Figure 3.3.5 was the reference drawing, as well as one of the best rated designs. The conveyor belt, like in Figure 3, led to a high speed and efficiency of making dumplings. The design was also the most stable and very compact. The team was in agreement that the design was the most ideal for the customer needs, and needed the least modification out of all designs.

IV. Design selection Matrices

Each design was tested against the reference design to compare various features of each machine. The design team then assigned a +, 0, or – to indicate whether the design was better than, similar to, or worse than the reference for that particular feature, respectively. Below, Table 2 looks at the criteria that was used to determine which design would be the best fit for the customer.

Selection Criteria	Concepts				
	A	B	C	D	E
	S-Gears	Rotating Pole	Factory Type	(Reference) Rotating Assembly	Conveyer Belt
Ease of handling	0	-	0	0	+
Dough	-	-	-	0	-
Filling	+	0	0	0	0
Wrapping	+	0	0	0	0
Collecting	-	-	0	0	0
Durability	0	0	0	0	0
Ease of manufacture	0	+	-	0	+
Compactness	+	+	-	0	-
Efficiency	-	-	0	0	0
Sum +'s	3	2	0	0	2
Sum 0's	3	3	6	9	5
Sum -'s	3	4	3	0	2
Net Score	0	-2	-3	0	0
Rank	1	4	5	1	1
Continue?	Combine	No	No	Combine	Combine

Table 3.4 Concept Screening Matrix

IV. Final Design and its Prototype

I. Sets of Working Drawings of Final Design

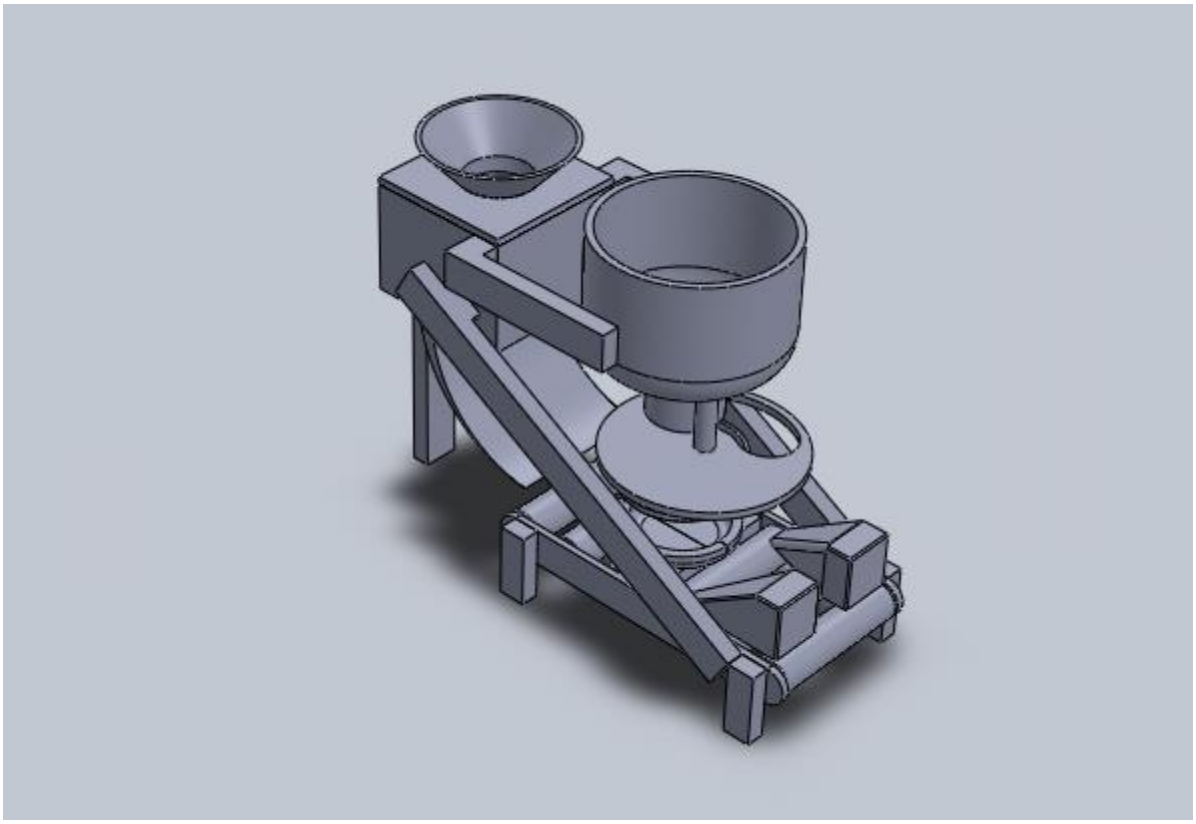

FIG. 4.1.1 Final Design Overview

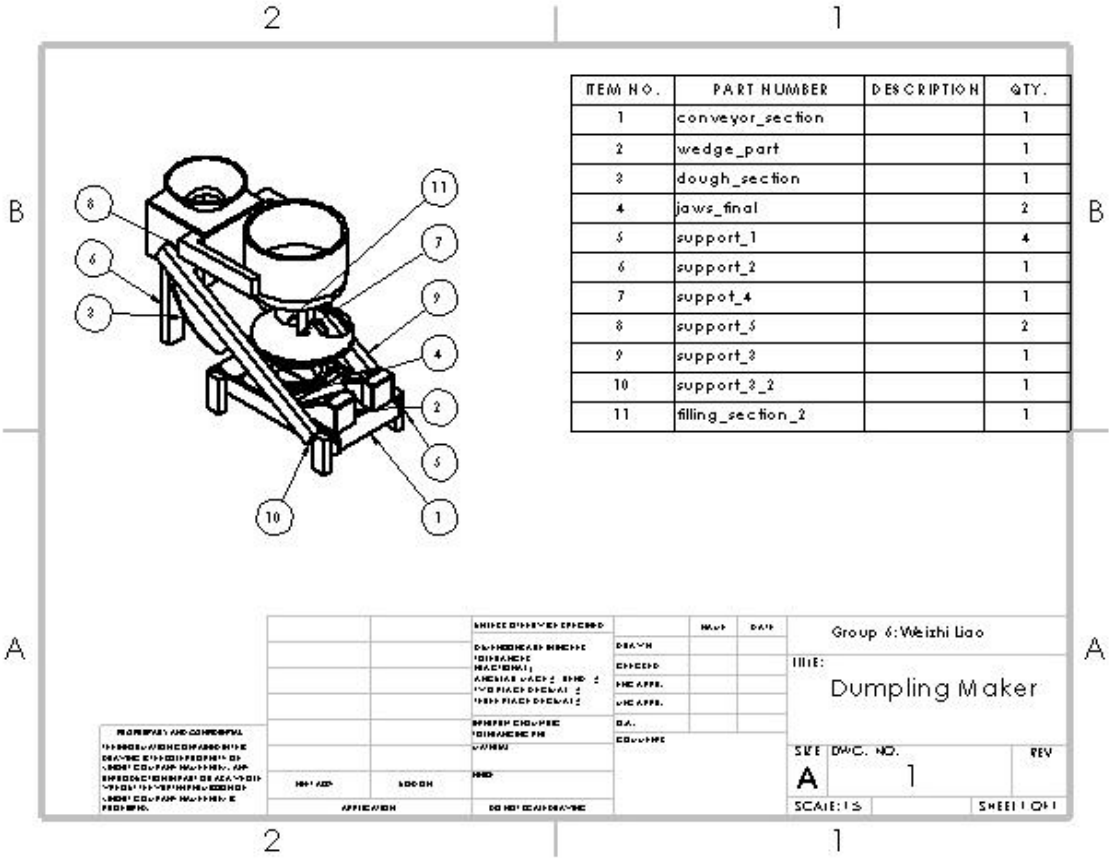

ITEM NO.	PART NUMBER	DESCRIPTION	QTY.
1	conveyor_section		1
2	wedge_part		1
3	dough_section		1
4	jaws_final		2
5	support_1		4
6	support_2		1
7	suppot_4		1
8	support_5		2
9	support_3		1
10	support_3_2		1
11	filling_section_2		1

FIG. 4.1.2 Parts of Final Design

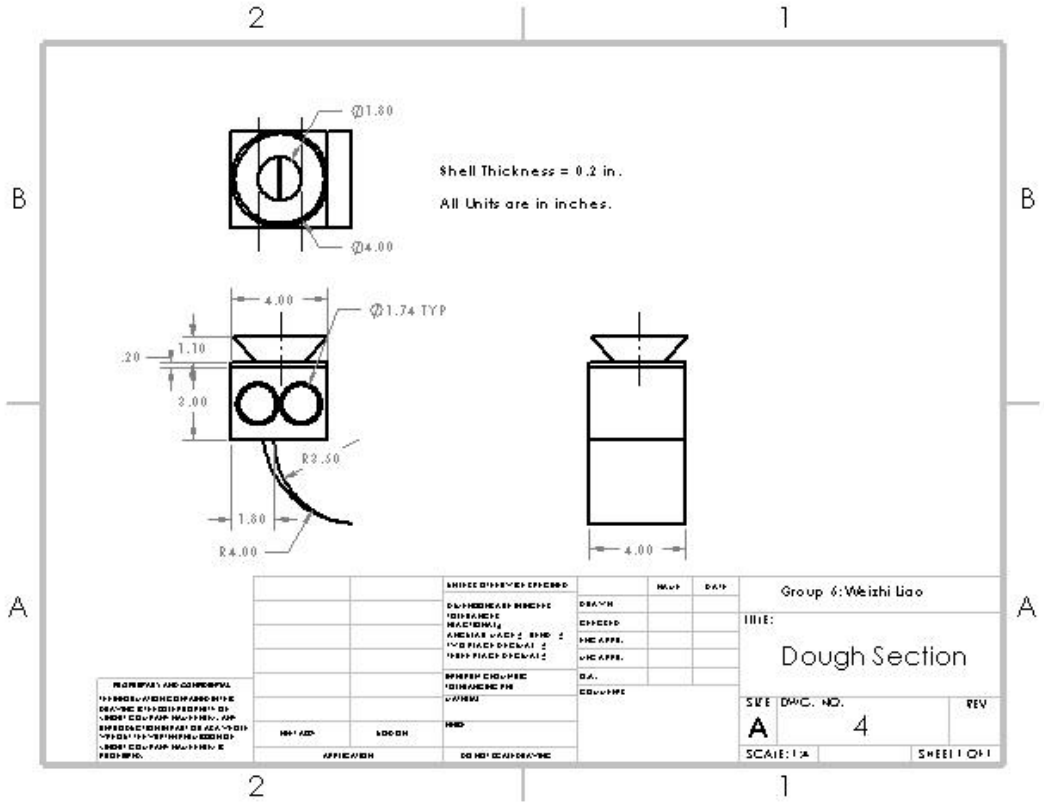

FIG. 4.1.3 Dough Section

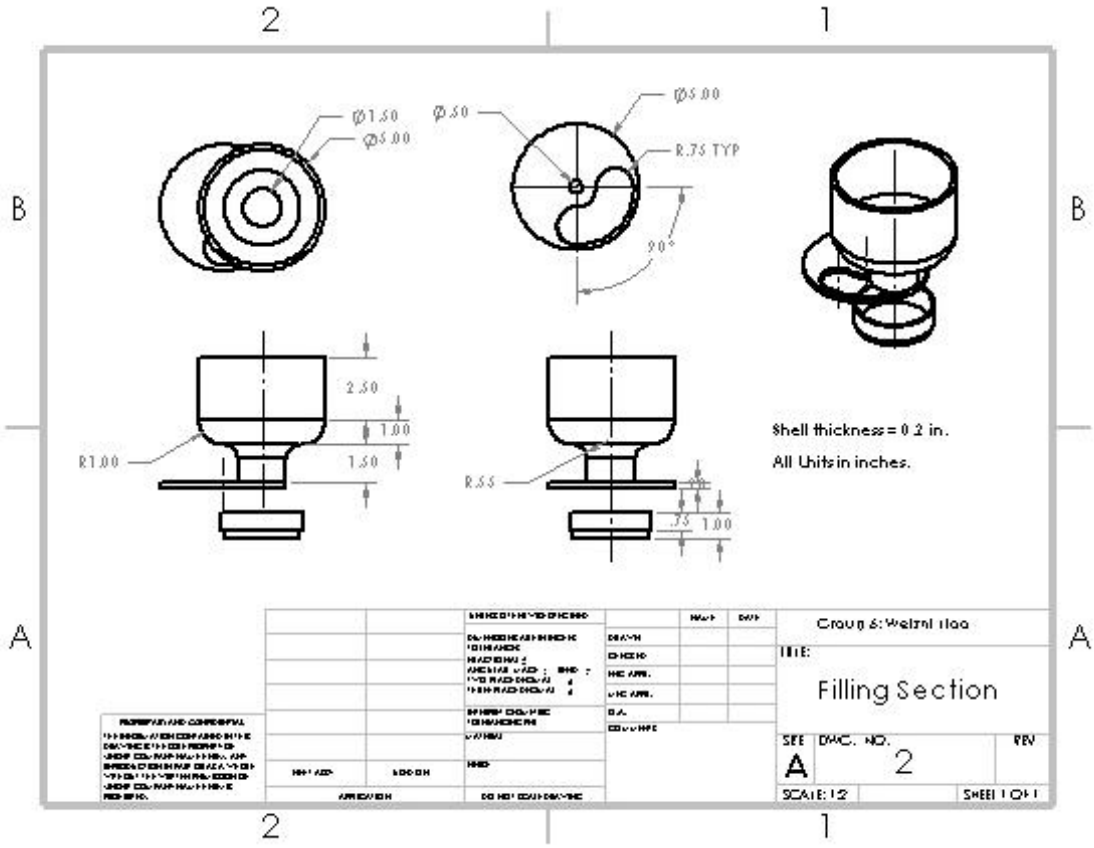

FIG. 4.1.4 Filling Section with a top view of rotating plate

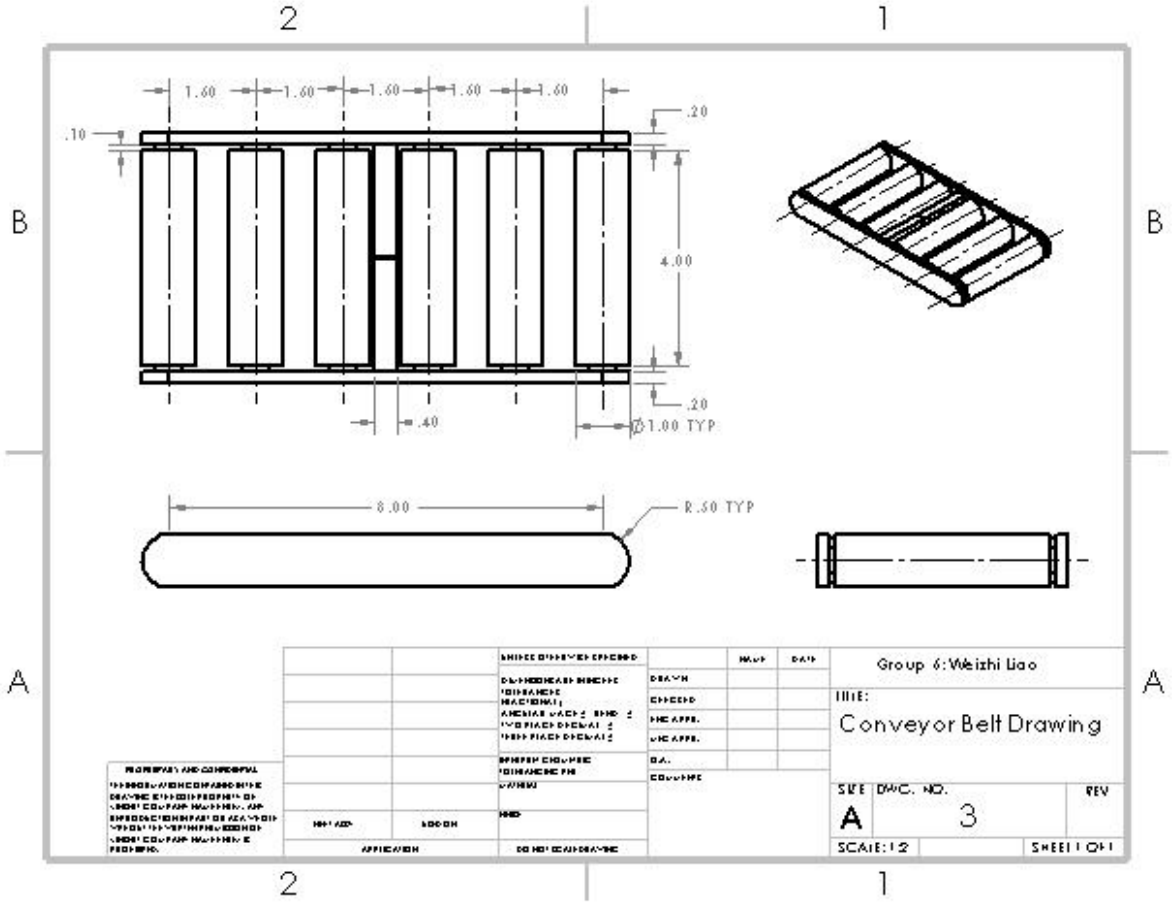

FIG. 4.1.5 Conveyor Belt Section

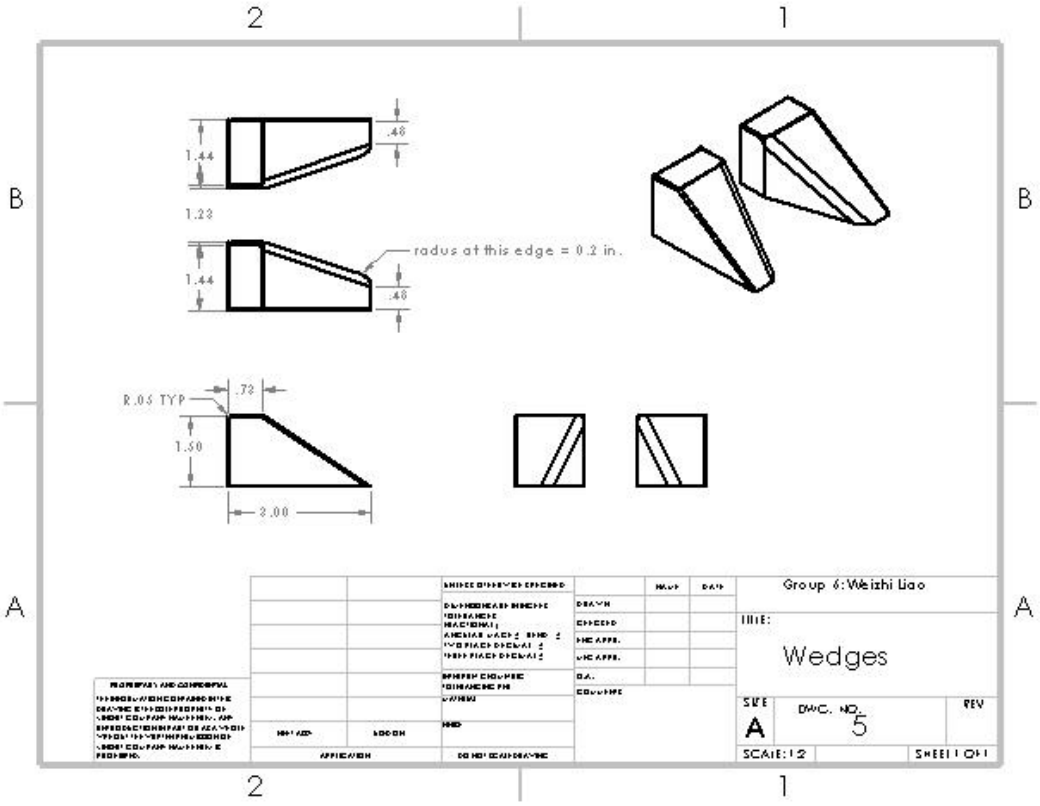

FIG. 4.1.6 Wedges

II. Prototype

Prototype Scale = 1:1

FIG. 4.2.1 Overview of Prototype

FIG. 4.2.2 Three views of Prototype

III. Design Features

This design has three main features, the dough section, the filling section and the conveyor belt. Other features include the wedges designed to close the dumpling wrappers located at the edge of conveyor belt, and several bars to connect the each feature and support the structure. This design is very compact and economically efficient.

The filling section (see FIG. 4.1.3) is the box with two rollers inside, a funnel on top and a slide below. The two rollers are apart 1/16 inches from each other, which is the desired thickness of the dough after processing. The funnel is placed at the center of the top cap, which allows the entrance of premade dough. The slide is designed for the flattened dough to slide down to the conveyor belt for next step process.

The filling sections (see FIG. 4.1.4) is a combination of filling container, switch plate, and dough cut. The switch plate operates like a switch that, when rotating, allows filling to drop down onto the dough when the hole is beneath the container, and pause when the hole is not right below the container. The cut is able to move up and down to cut the dough sheet into circles.

The conveyor belt (see FIG. 4.1.5) has two wrapper attached to it. Each wrapper's axis will only be fixed on the belt at one end. The wedges (see FIG. 4.1.6) is designed to close the wrapper, and the wedges are fixed at the edge of conveyor belt.

This design is automatic, as the entire design will operate itself. Calculations such as the angular speed of switch plate, speed of conveyor belt, as well as the roller in the dough section box will be done to ensure that filling will drop right on the wrappers.

IV. Operation Instruction

Dough need to be premade and the shape has to be able to fit in the hole on top of the dough section box. Rollers will start rotating first. Users need to put dough sheet on top of one wrapper for the functioning to work. The next step is, to collect dumplings on the other side.

V. Engineering Analysis

I. Working Mechanism

Pre-made dough is placed in the funnel on top of the box with the dough rollers. Automatic motor powered dough rollers spin, creating a 1/16” thick sheet of dough. The dough then slides down onto the folding dumpling clamp on the conveyer belt. The conveyer belt portion of the dumpling maker has motion sensors so as the clamp approaches the filling station, a circular cutter slightly bigger then the clamp comes down and cuts the excess dough off. At the same time, a rotating disk beneath the funnel with the dumpling filling rotates and a small gap on the disk allows the perfect amount of filling to drop onto the dough in the dumpling clamp. The clamp then moves along the conveyer belt and is lifted on each side by two spring-loaded ramps. The ramps become narrower and the clamp closes. The front of the clamp is fixed to the conveyer belt so as it begins to go on the bottom the clamp opens and the dumpling falls onto a plate. The clamp then cycles around for the process to be repeated.

II. Design Project Cost

Description of Items	Cost[2]
Plastic funnel for pre made dough	$9.50
Plastic box for rollers	$13.80
2 Dough rollers	$12.00
Plastic slide	$2.33
Plastic funnel for filling	$9.50
Rotating filling disk	$5.06
Dough cutter	$14.23
Folding dumpling clamp	$2.00
Conveyer belt	$24.97
2 ramps for closing the folding dumpling clamp	$5.30
Small motor	$19.95
	Total Cost: $118.64

Table 4.2 Bill of Materials (BOM)

VI. Summary and Conclusion

When we began to brainstorm for our dumpling maker our group wanted to create something that was efficient, affordable and simplistic. After interviewing Chinese restaurants from each of our hometowns the qualities we thought important to emphasize were similar to what the restaurants would look for in a dumpling maker. We also discovered that they only made about 15-20 dumpling orders a day and wanted something portable and easy to use. After each member in the group created their own dumpling maker we used a design matrix to incorporate the best ideas into our ideal dumpling maker. We made modifications as we encountered problems and used SolidWorks to create a design to use as the basis of our prototype. Our group used collaborative thinking, creativity and hard work to create our final product. We overcame complications by researching other possibilities, testing new ideas and each member added a unique skill that helped our team's ability to find a solution. We are all proud of the end result, which fulfilled the necessary requirements. This was an enjoyable learning experience and gave us a good idea of the process engineers go through to create a product. Moving forward we will surely use the knowledge we obtained from this project to create future projects and other future engineering endeavors.

VII. Acknowledgements

The team would like to first thank the two Chinese restaurants, China Jade of Corry, Pennsylvania and Maggie's China Inn of Waterford, Pennsylvania, for their cooperation and insight regarding the dumpling-making process. Both restaurants went above expectations with the information provided, even offering more sources of information. The design of the Rotating Assembly would not be practical if not for their expertise in the craft of making dumplings.

The team would also like to extend their gratitude to their professor, Mr. Xinli Wu. Professor Wu was instrumental with inspiring the creativity of the students, as well as providing an opportunity for students to think outside of the box. His guidance and expertise allowed the team to create a functional product that would have been difficult to do alone. Professor Wu even demonstrated the correct way to make dumplings, which really aided the team's efforts and thought process. The team could not have executed the project if not for Professor Wu, and they greatly thank him.

VIII. References

[1] Butler, Stephanie. "Delightful, Delicious Dumplings." *History.com*. A&E Television Networks, 28 Mar. 2014. Web. 23 Oct. 2015.

[2] "McMaster-Carr." *McMaster-Carr*. N.p., n.d. Web. 25 Oct. 2015.