Conveyor Belt Dumpling Maker
EDSGN 100, Section 204

Section 204
Team 6

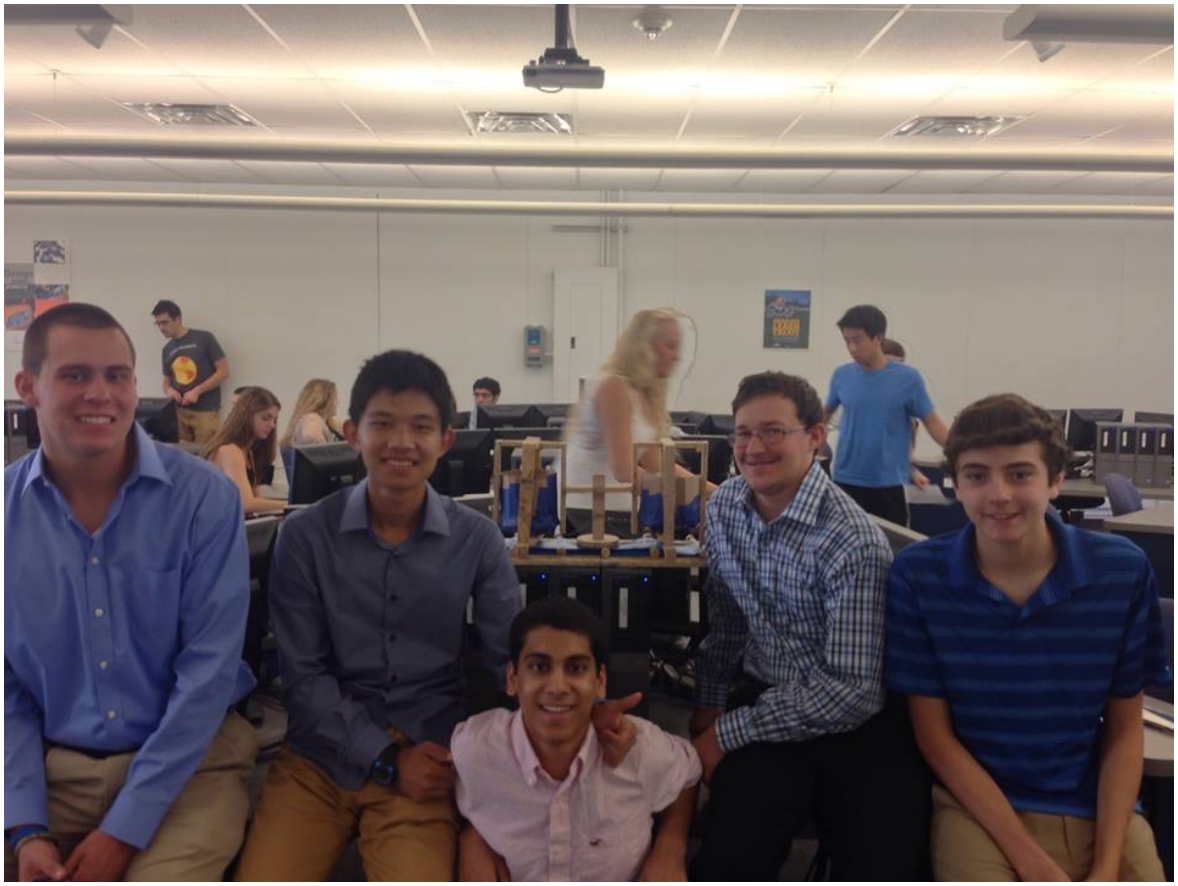

Submitted by (from left to right): Sean Corcoran, Jiaan Lyu, Varun Shanbhag, Alex Kanora, Chris Inglese,
Submitted to Xinli Wu on August 9, 2013

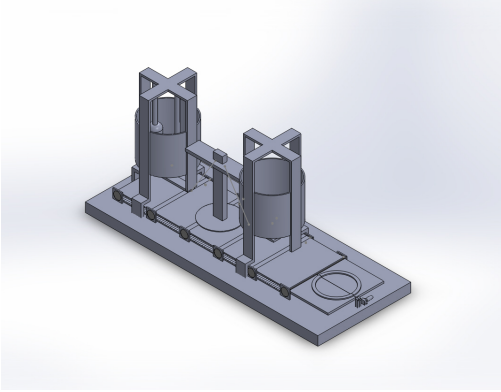

Abstract

The project was to build a prototype of a portable dumpling maker. Our project incorporated 2 cups, a presser, a folder and an assembly line. The materials totaled less than $200. We followed the design process.

Table of Contents

Cover Page.....Alexander Kanora

Abstract.....Varun Shanbhag

Table of Contents.....Alexander Kanora

Introduction.....Varun Shanbhag

Description of the Design Task.....Alexander Kanora

Design Approach.....Sean Corcoran

The Final Design and its Prototype.....Alexander Kanora and Chris Inglese

Engineering Analysis.....Jiaan Lyu

Summary and Conclusions.....Varun Shanbhag

Acknowledgement.....Alexander Kanora

References.....None

Introduction

This project had many hours of dedication put into it. We used the design process to carry out this three week project that allowed us to delve into the world of engineering. The project's main goal was to design and build a prototype of a portable dumpling maker. The dumpling maker had to be portable because we had to consider those who did not have enough space in their kitchen. We could not construct a prototype that was screwed into the floor, it had to be portable.
The dumpling maker had to be affordable, easy to put together and take apart, and durable. We followed through with the design process, and were able to come up with a simple yet able foldable dumpling maker that met all the specifications.

Description of the Design Task

Problem Statement

The problem is that dumplings are in great demand, but are hard to make. Restaurant owners and regular people alike want to make dumplings easily and quickly.

Mission Statement

Our mission was to design and build an automatic/semi-automatic dumpling maker for use in a home or restaurant.

Design Specifications

The design specifications included the dumpling maker being either automatic or semi-automatic, as well as being able to produce no less than 10 dumplings per minute on average. The dumpling maker should not cost over $200, and should be dishwasher and user safe. It should also be easy to maintain.

Design Approach

Customer Needs Assessment

We asked the owners of China Dragon and Chopstick Express the following questions:

1. How fast can you make one dumpling?
   China Dragon: 10 seconds.
   Chopstick Express: 50 seconds.
2. How much would you pay for a dumpling maker?
   China Dragon: $300.
   Chopstick Express: $150.

Project Management - Gantt Chart

Task Name	Duration	Start	Finish
Recognition of the Need	3 days	Mon 7/22/13	Wed 7/24/13
Definition of the Problem	3 days	Mon 7/22/13	Wed 7/24/13
Gathering Information	3 days	Mon 7/22/13	Wed 7/24/13
Conceptualization	2 days	Wed 7/24/13	Thu 7/25/13
Evaluation	3 days	Thu 7/25/13	Mon 7/29/13
Analysis and Design	4 days	Mon 7/29/13	Thu 8/1/13
Construct and Test Prototypes	6 days	Thu 8/1/13	Thu 8/8/13
Communication of Design	9 days	Mon 7/29/13	Thu 8/8/13

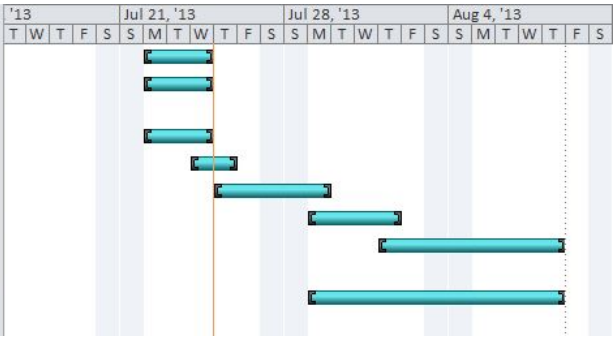

3. How much space would you give for a dumpling maker to be installed?
   China Dragon: As small as possible.
   Chopstick Express: 3’x1’.

Concept Generation

Catapult ~~Dumpling Maker~~

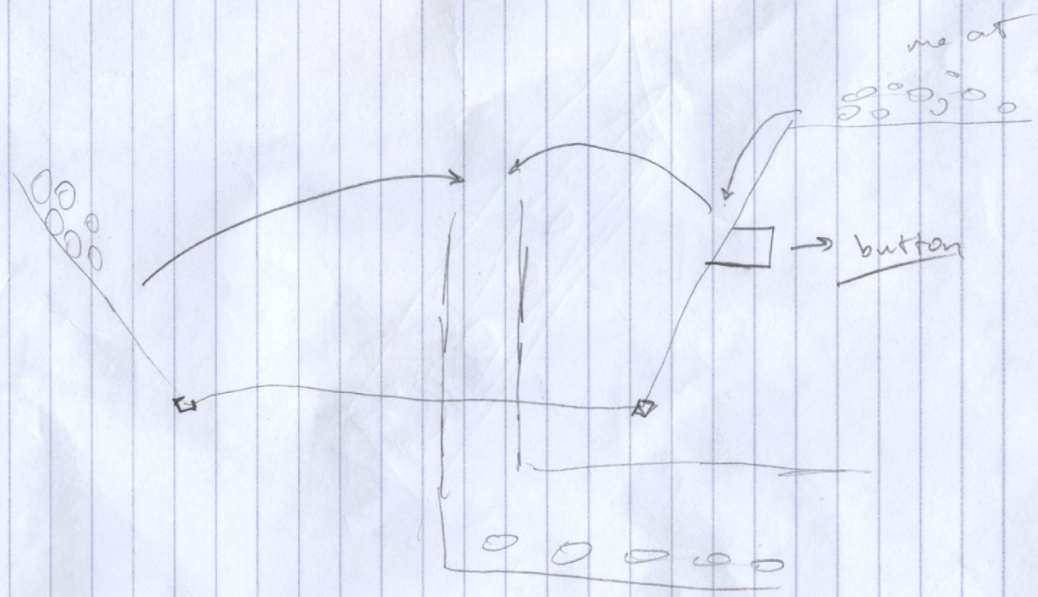

~~Conveyer belt #2~~

assembly line

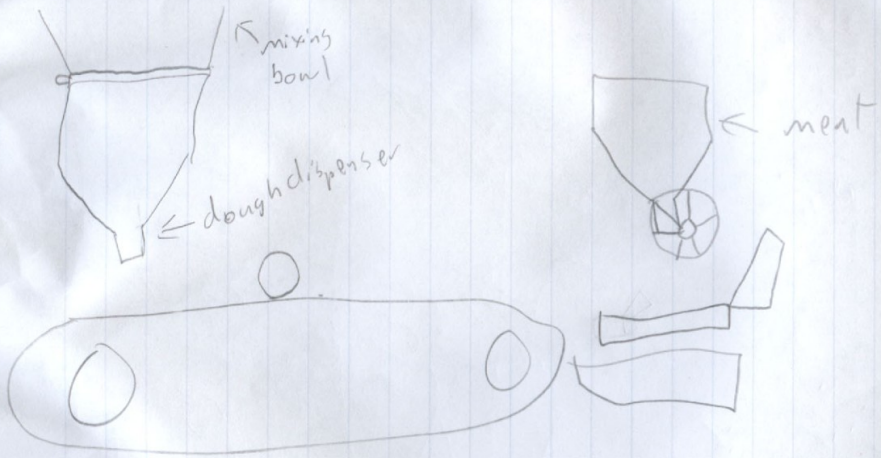

Conveyer belt

Dumpling Maker

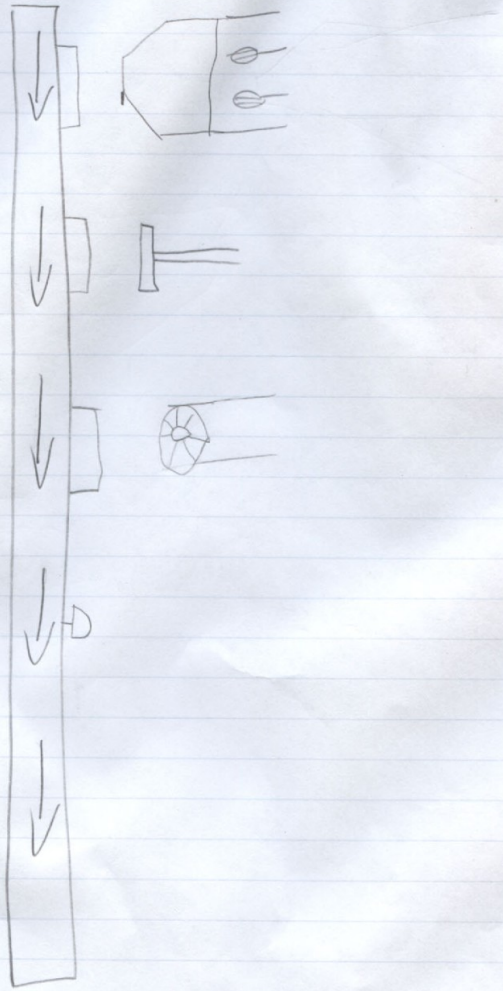

tower

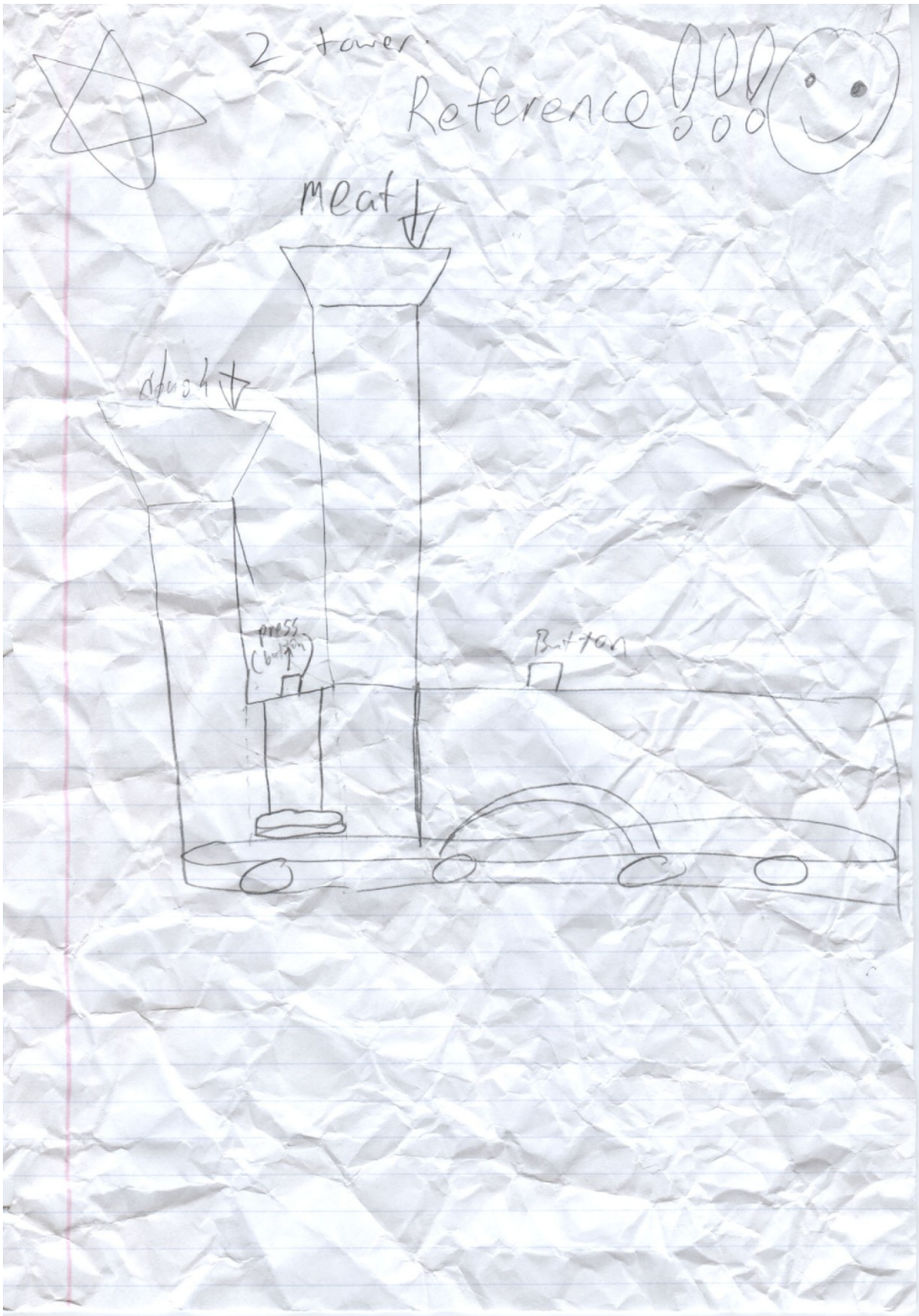
2 tower.
Reference!!!
meat
dough
press (button)
Button

Design Selection Matrices

Selection Criteria					
	A Assembly Line	B Conveyor Belt	C (Reference) 2 Tower	D Tower	E Catapult
Ease of Operation	0	+	0	0	-
Safety	-	-	0	0	-
Efficiency	0	+	0	-	0
Cost	+	+	0	-	+
Effectiveness					
Maintenance	+	+	0	+	+
Smallness	0	-	0	+	0
Sum +'s	2	4	0	2	2
Sum 0's	3	0	6	2	2
Sum –'s	1	2	0	2	2
Net Score	1	2	0	0	0
Rank	2	1	3	3	3
Continue?	No	Yes	No	No	No

Table 1: Design Matrix

Selection Criteria	Weight										
		A Assembly Line		B Conveyor Belt		C (Reference) 2 Tower		D Tower		E Catapult	
		Rating	Weighted Score	Rating	Weighted Sco	Rating	Weighted Score	Rating	Weighted Score	Rating	Weighted Score

					re						
Ease of Operation **Safety** **Efficiency** **Cost Effectiveness** **Maintenance** **Smallness**	**20%** **15%** **25%** **10%** **20%** **10%**	**3** **2** **3** **4** **5** **3**	**0.60** **0.30** **0.75** **0.40** **1.00** **0.30**	**4** **2** **5** **5** **4** **2**	**0.80** **0.30** **1.25** **0.50** **1.00** **0.30**	**3** **3** **3** **3** **3** **3**	**0.60** **0.45** **0.75** **0.30** **0.60** **0.30**	**3** **3** **1** **2** **4** **4**	**0.60** **0.45** **0.25** **0.20** **0.80** **0.40**	**2** **1** **3** **4** **5** **3**	**0.40** **0.15** **0.75** **0.40** **1.00** **0.30**
Total Score **Rank**		**3.352**		**4.151**		**3.003**		**2.704**		**3.003**	
Continue?		**No**		**Develop**		**No**		**No**		**No**	

Table 2: Concept Scoring Matrix

The Final Design and its Prototype

Working Drawings

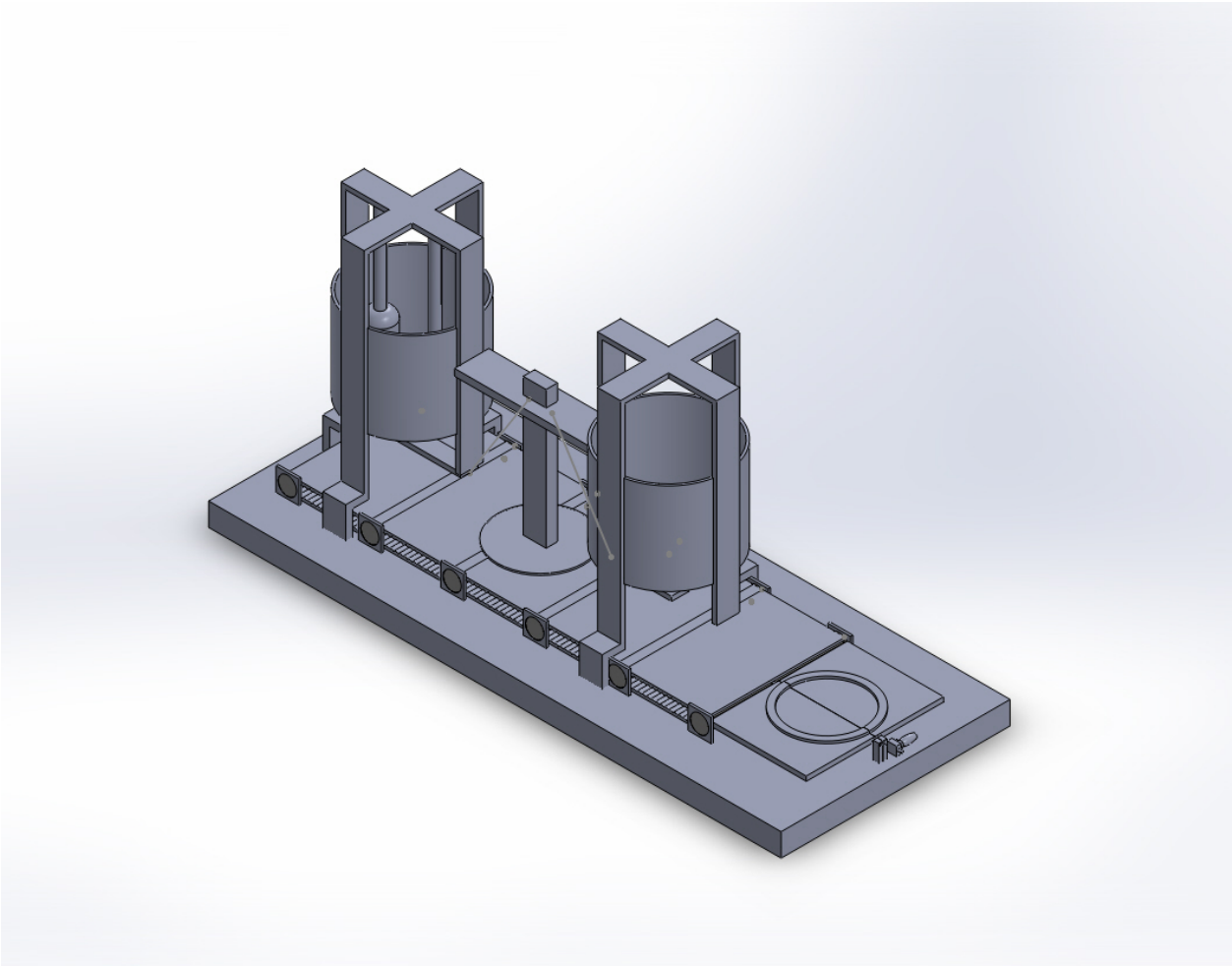

ITEM NO.	PART NUMBER	PRICE	QTY.	COST
1	cogbelt	1.30	5	6.50
2	Cup	5.80	1	5.80
3	Press	4.30	1	4.30
4	Cup2	5.80	1	5.80
5	Folder2	4.60	2	9.20
6	cyl	0.20	2	0.40
7	Hole	0.20	2	0.40
8	handle2	1.30	1	1.30
9	whisk	1.10	2	2.20
10	floor	6.50	1	13.00
11	Part2	0.20	12	2.40

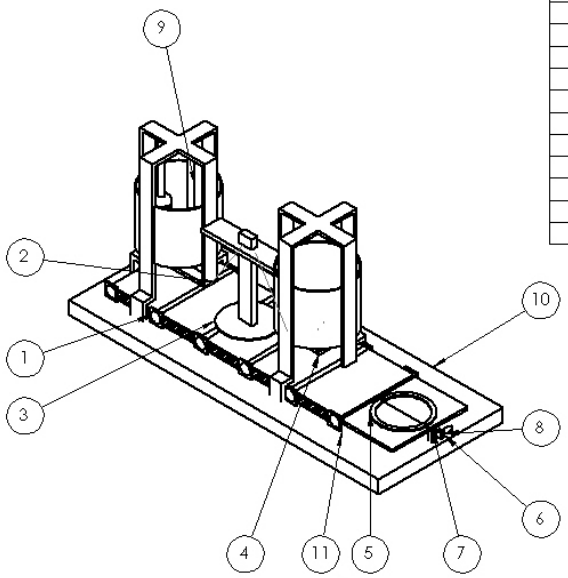

UNLESS OTHERWISE SPECIFIED:
DIMENSIONS ARE IN INCHES
TOLERANCES:
FRACTIONAL ±
ANGULAR: MACH ± BEND ±
TWO PLACE DECIMAL ±
THREE PLACE DECIMAL ±
INTERPRET GEOMETRIC TOLERANCING PER:
MATERIAL
FINISH
DO NOT SCALE DRAWING

	NAME	DATE
DRAWN		
CHECKED		
ENG APPR.		
MFG APPR.		
Q.A.		

COMMENTS:

TITLE:

SIZE | DWG. NO. | REV

Dumpling maker

SCALE: 1:6 | WEIGHT: | SHEET 1 OF 1

NEXT ASSY | USED ON

APPLICATION

PROPRIETARY AND CONFIDENTIAL
THE INFORMATION CONTAINED IN THIS DRAWING IS THE SOLE PROPERTY OF <INSERT COMPANY NAME HERE>. ANY REPRODUCTION IN PART OR AS A WHOLE WITHOUT THE WRITTEN PERMISSION OF <INSERT COMPANY NAME HERE> IS PROHIBITED.

5 4 3 2 1

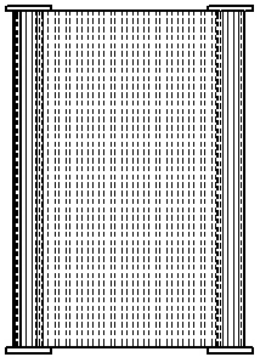

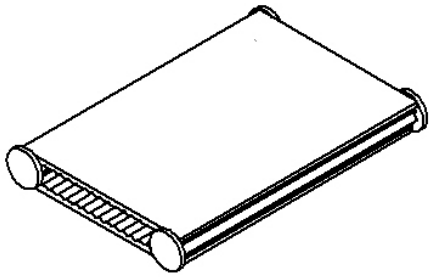

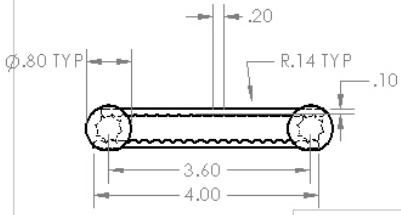

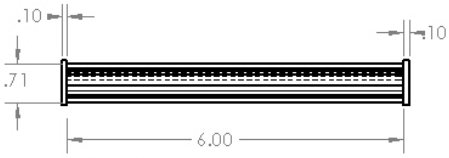

		UNLESS OTHERWISE SPECIFIED:		NAME	DATE
		DIMENSIONS ARE IN INCHES TOLERANCES: FRACTIONAL ± ANGULAR: MACH ± BEND ± TWO PLACE DECIMAL ± THREE PLACE DECIMAL ±	DRAWN		
			CHECKED		
			ENG APPR.		
			MFG APPR.		
		INTERPRET GEOMETRIC TOLERANCING PER:	Q.A.		
		MATERIAL	COMMENTS:		
NEXT ASSY	USED ON	FINISH			
APPLICATION		DO NOT SCALE DRAWING			

PROPRIETARY AND CONFIDENTIAL
THE INFORMATION CONTAINED IN THIS DRAWING IS THE SOLE PROPERTY OF <INSERT COMPANY NAME HERE>. ANY REPRODUCTION IN PART OR AS A WHOLE WITHOUT THE WRITTEN PERMISSION OF <INSERT COMPANY NAME HERE> IS PROHIBITED.

TITLE:

SIZE	DWG. NO.	REV
A	cogbelt	
SCALE: 1:2	WEIGHT:	SHEET 1 OF 1

5 4 3 2 1

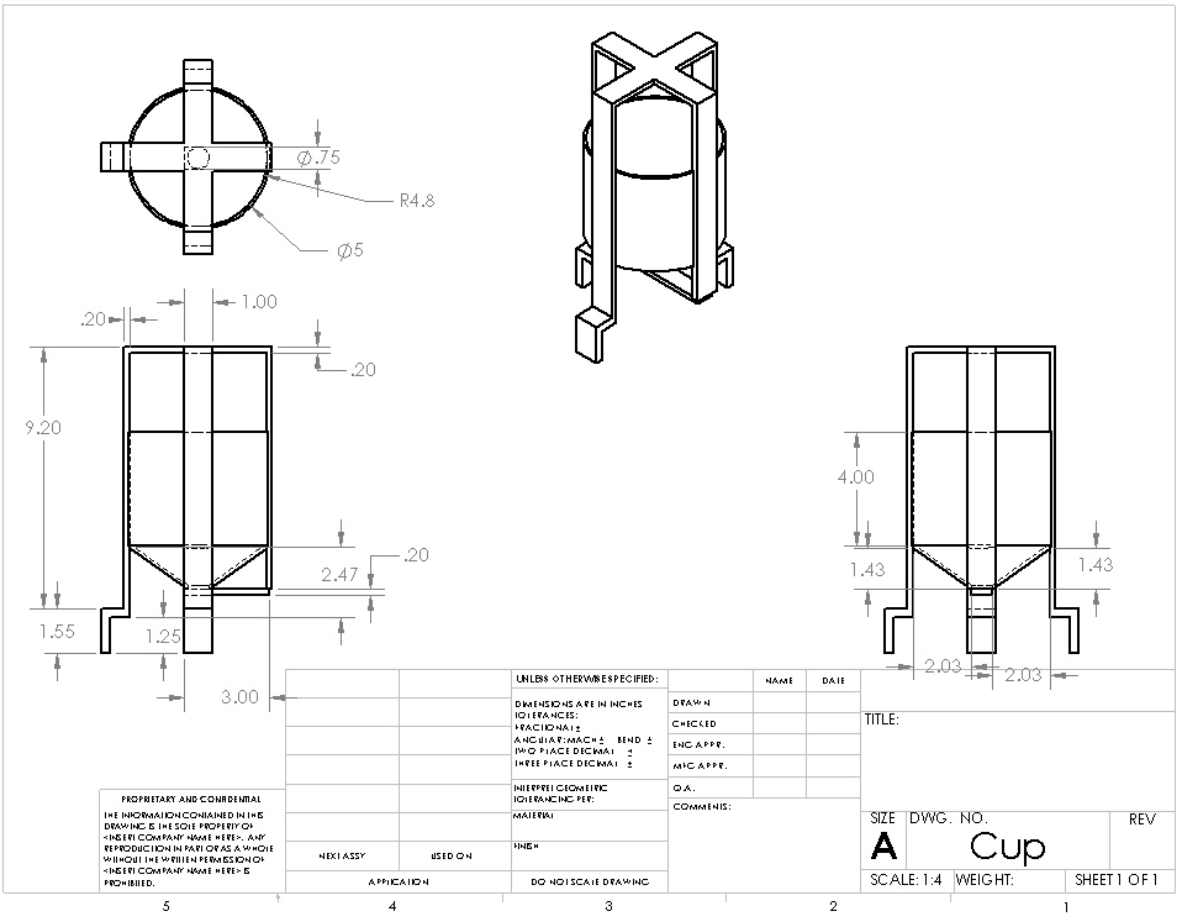
Ø.75
R4.8
Ø5
.20
1.00
.20
9.20
.20
2.47
1.55
1.25
3.00
4.00
1.43
1.43
2.03
2.03
PROPRIETARY AND CONFIDENTIAL
THE INFORMATION CONTAINED IN THIS DRAWING IS THE SOLE PROPERTY OF <INSERT COMPANY NAME HERE>. ANY REPRODUCTION IN PART OR AS A WHOLE WITHOUT THE WRITTEN PERMISSION OF <INSERT COMPANY NAME HERE> IS PROHIBITED.
NEXT ASSY
USED ON
APPLICATION
UNLESS OTHERWISE SPECIFIED:
DIMENSIONS ARE IN INCHES
TOLERANCES:
FRACTIONAL ±
ANGULAR: MACH ± BEND ±
TWO PLACE DECIMAL ±
THREE PLACE DECIMAL ±
INTERPRET GEOMETRIC TOLERANCING PER:
MATERIAL
FINISH
DO NOT SCALE DRAWING
NAME
DATE
DRAWN
CHECKED
ENG APPR.
MFG APPR.
Q.A.
COMMENTS:
TITLE:
SIZE
A
DWG. NO.
Cup
REV
SCALE: 1:4
WEIGHT:
SHEET 1 OF 1
5
4
3
2
1

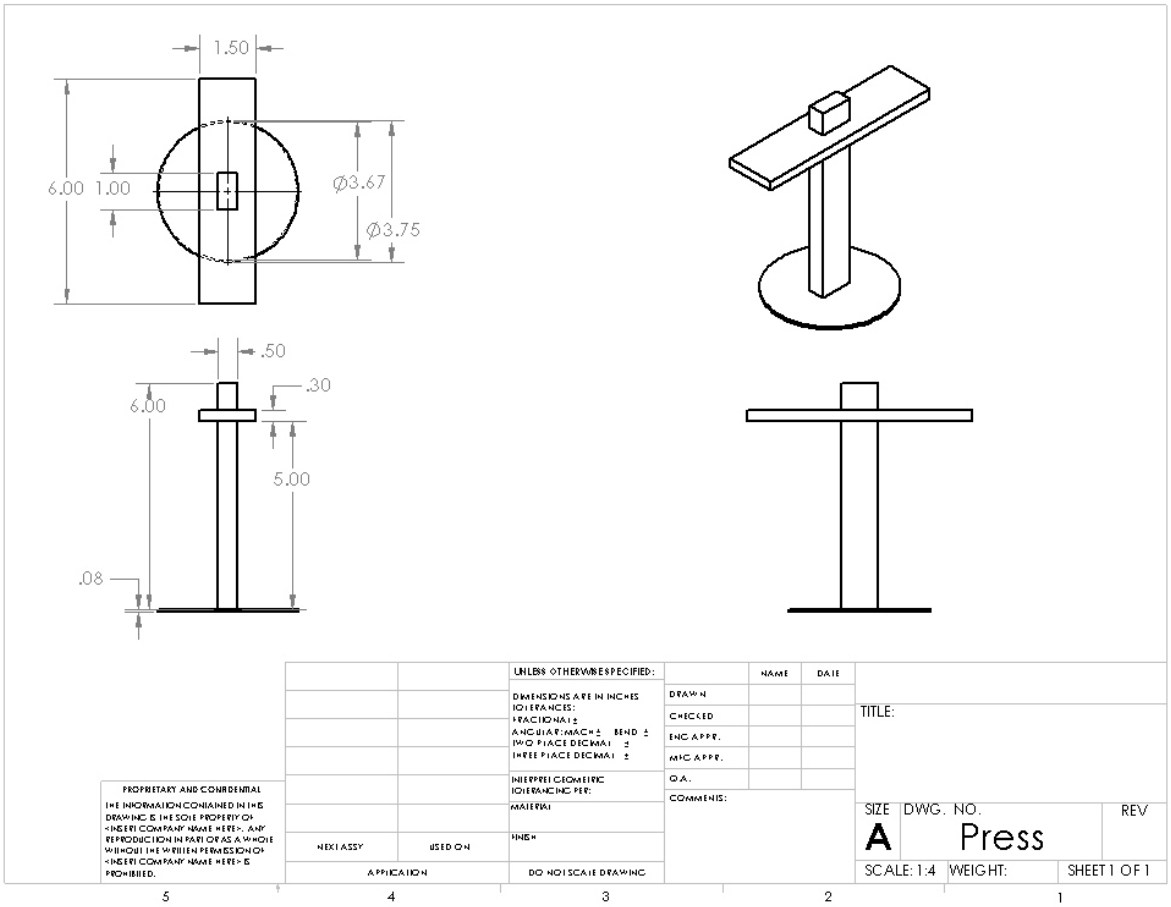

Prototype Scale and Digital Image

Scale = 1:1

Design features

This design features a conveyor belt that has two buckets above it. These buckets hold the meat filling and all the dough ingredients. Inside the dough bucket there are two whisks that will mix the dough. Between the two buckets there is a dough press that will flatten the dough. At the end of the conveyor belt there is a dumpling folder that will create the actual dumpling.

Engineering Analysis

Working mechanism

Firstly, put the flour into the first cup with water in it and the whisks mix them. Then the dough will come out and the presser press and cut it into a certain size. After that, the meat from the second cup come out onto the dough and the folder fold it as a dumpling.Our dumpling maker is semiautomatic, we use the handle to move the assembly line and we press the dough by ourselves.

Cost analysis

Material(Item)	cost per unit	quantity	total cost
cups	$5.80	2	$11.60
folder	$4.60	1	$4.60
floor	$6.50	1	$6.50
cod wheel	$1.30	6	$7.80
handle	$1.60	1	$1.60
engine	$19.95	1	$19.95
whisk	$1.10	2	$2.20
base	$9.80	1	$9.80
presser and cutter	$4.30	1	$4.30
Total			$68.05

We want to make the dumpling maker light so we choose hard plastic to make it. Therefore, it can be both strong and light. Furthermore, it makes our budget weigh less than the original $200 one.

Summary and Conclusions

The project on the whole was a success for us. The dumpling maker was portable and was able to make the specified food efficiently. We followed the design process from recognition of the problem to the building of the prototype. We recognized the issue of having dumpling makers that take up too much space, and did something about it. We realized that the dumpling maker had to fit in an ordinary sized kitchen. However, there were some things we know we could improve on. Some people may suggest easier portability. Others could complain

over the aesthetics of the design, or the issues with lifting the dumpling maker without developing back problems. If given more time, we could have made it into even smaller pieces. The consumer could put together or take apart the individual pieces which would relieve the weight that you would have to lift. In the end, we believe that we did the best with the time given to us on this project.

Acknowledgement

We would like to acknowledge Xinli Wu for giving us tips on this project. We would also like to acknowledge Nick Petryunak for helping us build the prototype. Finally, our thanks goes out to the managerial staff of both China Dragon and Chopstick Express for helping us by answering our questions for customer needs surveying.