Engineering Design 100
Section 204 Team #6
The Wagon

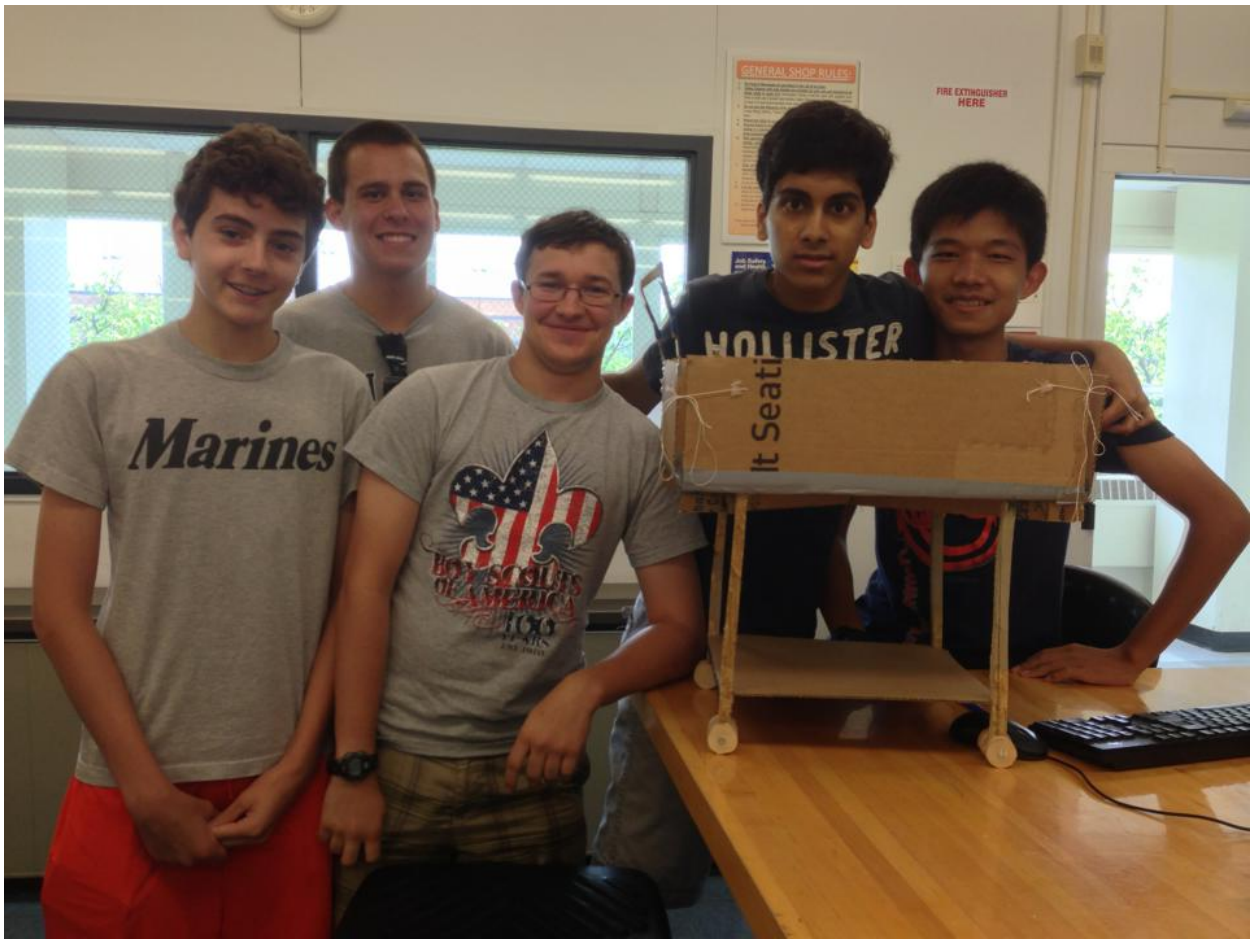

Submitted by (left to right): Chris Inglese, Sean Corcoran, Alex Kanora, Varun Shanbhag, Jiaan Lyu

Submitted to: Xinli Wu

Summer 2013

Date of Submission: July 25th, 2013

Table of Contents

Cover Page..... Varun Shanbhag
Abstract (Executive Summary)..... Alexander Kanora
Introduction..... Alexander Kanora
Description of the Design Task..... Varun Shanbhag

- Problem Statement
- Mission Statement
- Design Specifications

Design Approach..... Jiaan Lyu

- Project Management - Gantt Chart
- Customer Needs Assessment
- Concept Generation
- Design Selection Matrices

The Final Design and Prototype..... Alexander Kanora and Chris Inglese

- Working Drawings
- Prototype Scale and Digital Image
- Design Features
- Operation Instructions

Engineering Analysis..... Sean Corcoran

- Working Mechanism
- Cost Analysis

Conclusion..... Alexander Kanora
Acknowledgements ..... Xinli Wu and Nick Petryunak
References ..... None

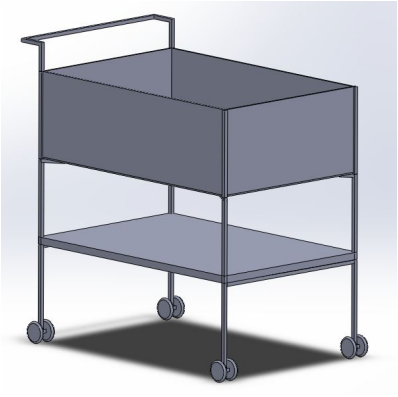

Abstract

The project was to build a prototype of a foldable shopping cart. Our project incorporated 4 folding sides with a removable platform on the bottom that we can insert into the top. The materials totaled over $50, but they could be lowered. We followed the design process.

Introduction

This project had many hours of dedication put into it. We used the design process to carry out this three week project that allowed us to delve into the world of engineering. The project's main goal was to design and build a prototype of a shopping cart. The shopping cart had to be foldable in a way so that both young and old people could use it with ease. The shopping cart had to be affordable, easy to put together and take apart, and durable. We followed through with the design process, and were able to come up with a simple yet able foldable shopping cart that met all the specifications.

Problem Statement

The problem that we had to undertake was how to design a foldable cart that any person could use, whether it be a 5 year old boy or a 95 year old grandmother. We wanted to make an efficient foldable shopping cart for those people in metropolitan areas who do not have cars. It has to be light, portable and needs to be durable.

Mission Statement

Design and build a prototype of a folding shopping cart for people without cars, or people that need to carry groceries longer than from garage.

Design Specifications

- The folding shopping cart should be easy to use (and assemble, if required).
- The folding shopping cart should be ideal for transporting groceries and some other materials.
- The folding shopping cart should fold compactly for easy storage.
- The material cost for the folding shopping cart should not exceed $50 unless it can be justified.
- The folding shopping cart should have a weight capacity of 100 lbs.

Project Management - Gantt Chart

	Task Mode	Task Name	Duration	Start	Finish
1		Recognition of the Need	3 days	Thu 6/27/13	Mon 7/1/13
2		Definition of the Problem	3 days	Thu 6/27/13	Mon 7/1/13
3		Gathering Information	8 days	Thu 6/27/13	Mon 7/8/13
4		Conceptualization	6 days	Mon 7/1/13	Mon 7/8/13
5		Decision Matrix - Evaluation	4 days	Mon 7/8/13	Thu 7/11/13
6		Analysis and Design	4 days	Mon 7/8/13	Thu 7/11/13
7		Construct and Test Prototypes	3 days	Thu 7/11/13	Mon 7/15/13
8		Communication of Design	4 days	Mon 7/15/13	Thu 7/18/13

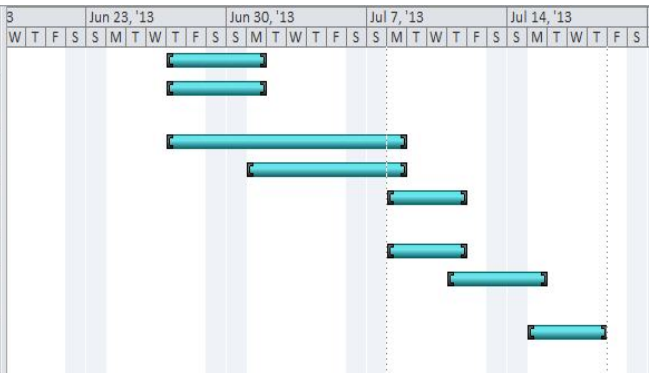

Customer needs assessment

1. What kind of shopping cart would you prefer? (box, cage, wagon)

1. Wagon. 2. Box

2. Do you want an automatic brake in the shopping cart?

1.Yes, because it's safer. 2 No, it makes the cart more difficult to push.

3. How big do you want the shopping cart to be?

1. Maybe just as big as the normal shopping cart in the mall, that's enough.

2.Make it smaller than the normal one, it'll be lighter for me to push.

4. How do like the foldable shopping cart?

1. It’s good but you need to make it easy to fold.
2. It’s convenient but you need to make it simple, or it’ll cause some problems.

Concept Generation

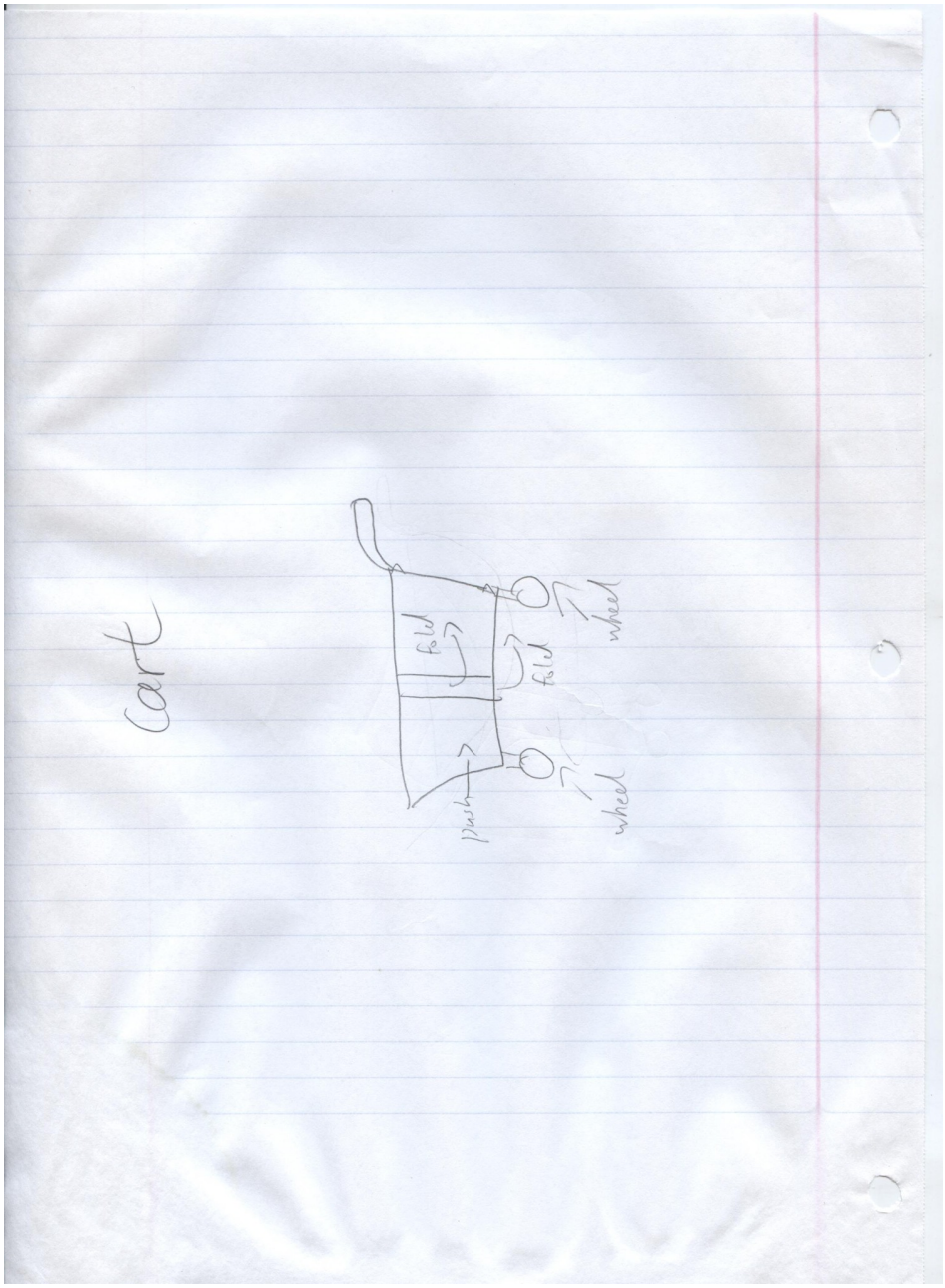

Cage

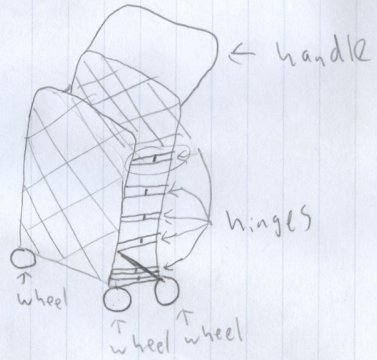

box

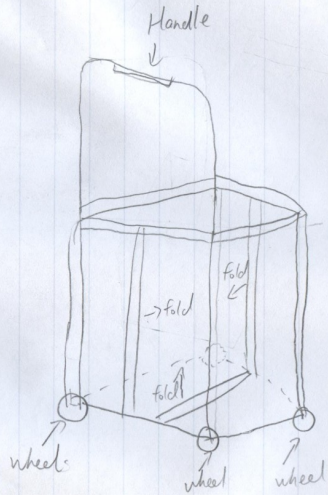

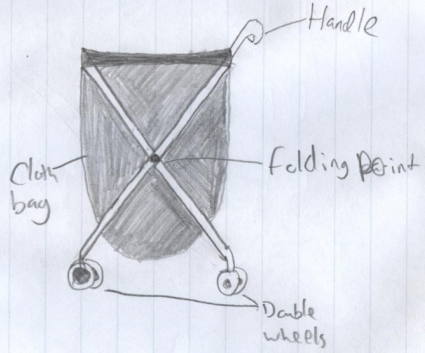
Handle
Folding point
Cloth bag
Double wheels

Wagon

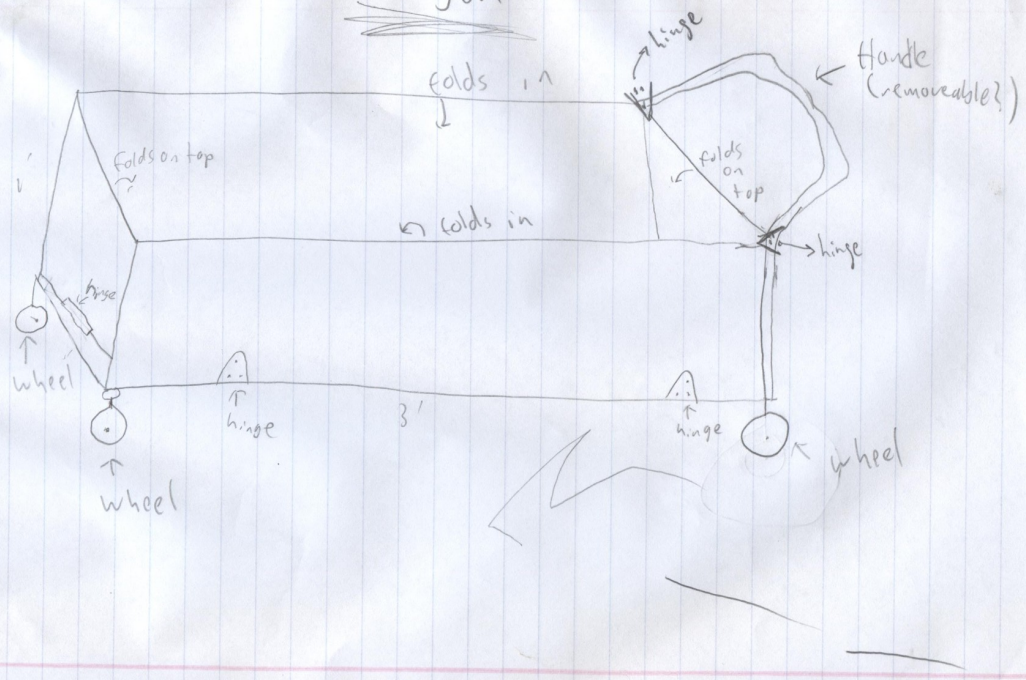
hinge
Handle (removeable?)
folds in
folds on top
folds on top
folds in
hinge
brace
wheel
hinge
3'
hinge
wheel
wheel

Design Selection Matrix

Selection Criteria	Concepts				
	A Wagon	B (Reference) Bag	C Cage	D Box	E Cart
Ease of Handling Ease of Assembly Durability Ease of Manufacture Portability Weight Capacity	+ 0 + + - +	0 0 0 0 0 0	0 0 + 0 - +	0 0 + 0 - 0	+ - + - - +
Sum +'s Sum 0's Sum –'s	4 1 1	0 6 0	2 3 1	1 4 1	3 0 3
Net Score Rank	1 1	0 2	1 1	0 2	0 2
Continue?	No	No	Yes	No	No

Table 1: Design Matrix

Selection Criteria	Weight	Concepts									
		A Wagon		B (Reference) Bag		C Cage		D Box		E Cart	
		Rating	Weighted Score	Rating	Weighted Score	Rating	Weighted Score	Rating	Weighted Score	Rating	Weighted Score
Ease of Handling	10%	4	0.4	3	0.3	3	0.3	2	0.2	4	0.4
Ease of Assembly	15%	2	0.3	3	0.45	4	0.6	3	0.45	1	0.15
Durability	20%	5	1.0	3	0.6	4	0.8	3	0.6	4	0.8
Ease of Manufacture	10%	2	0.2	3	0.3	3	0.3	2	0.2	1	0.1
Portability	25%	2	0.5	3	0.75	2	0.5	3	0.75	2	0.5
Weight Capacity	20%	5	1.0	3	0.6	4	0.8	3	0.6	5	1.0
Total Score		3.40		3.00		3.30		2.80		2.95	
Rank		1		3		2		5		4	
Continue?		No		No		Develop		No		No	

Table 2: Concept Scoring Matrix

Working drawings

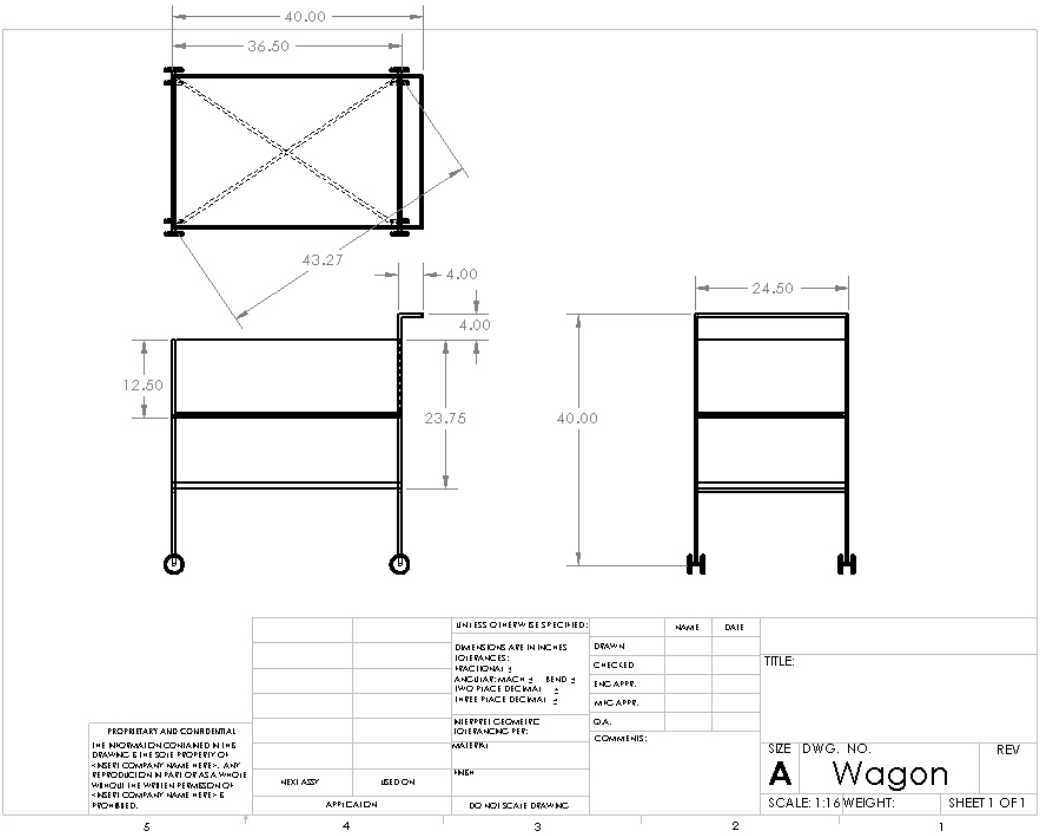

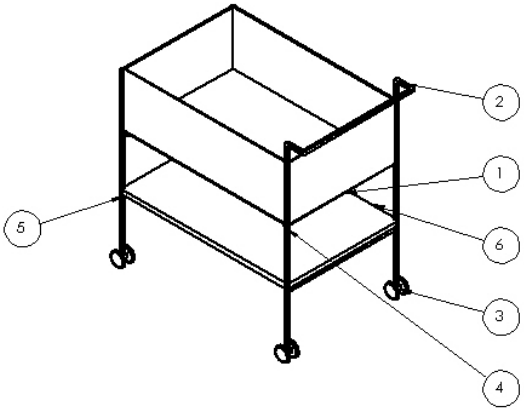

ITEM NO.	PART NUMBER	PRICE	manual explode/QTY.	COST
1	Box	13.63	1	13.63
2	Handle	2.80	1	2.80
3	Wheel	7.32	4	29.28
4	Cross hatch	2.79	2	5.58
5	crosswheel	2.79	2	5.58
6	Bottom shelf	6.64	1	6.64

PROPRIETARY AND CONFIDENTIAL

THE INFORMATION CONTAINED IN THIS DRAWING IS THE SOLE PROPERTY OF <INSERT COMPANY NAME HERE>. ANY REPRODUCTION IN PART OR AS A WHOLE WITHOUT THE WRITTEN PERMISSION OF <INSERT COMPANY NAME HERE> IS PROHIBITED.

NEXT ASSY | USED ON

APPLICATION

UNLESS OTHERWISE SPECIFIED:

DIMENSIONS ARE IN INCHES
TOLERANCES:
FRACTIONAL ±
ANGULAR: MACH ± BEND ±
TWO PLACE DECIMAL ±
THREE PLACE DECIMAL ±

INTERPRET GEOMETRIC TOLERANCING PER:

MATERIAL

FINISH

DO NOT SCALE DRAWING

	NAME	DATE
DRAWN		
CHECKED		
ENG APPR.		
MFG APPR.		
Q.A.		

COMMENTS:

TITLE:

WAGON

SIZE A | DWG. NO. Wagon2 | REV

SCALE: 1:16 | WEIGHT: | SHEET 1 OF 1

5 4 3 2 1

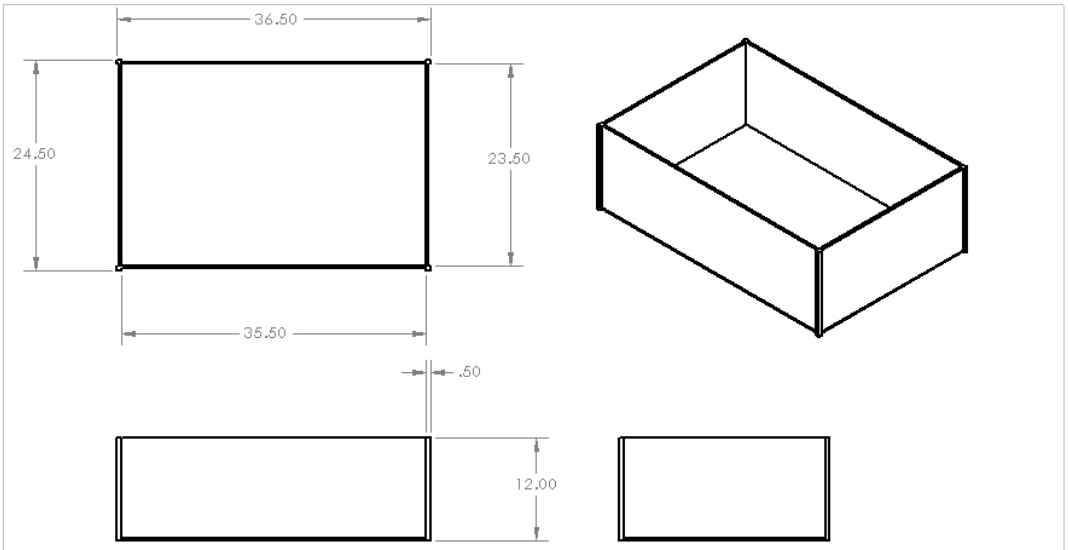

		UNLESS OTHERWISE SPECIFIED:		NAME	DATE
		DIMENSIONS ARE IN INCHES TOLERANCES: FRACTIONAL ± ANGULAR: MACH ± BEND ± TWO PLACE DECIMAL ± THREE PLACE DECIMAL ±	DRAWN		
			CHECKED		
			ENG APPR.		
			MFG APPR.		
		INTERPRET GEOMETRIC TOLERANCING PER:	Q.A.		
		MATERIAL	COMMENTS:		
NEXT ASSY	USED ON	FINISH			
APPLICATION		DO NOT SCALE DRAWING			

TITLE:

SIZE A | DWG. NO. Box | REV

SCALE: 1:12 | WEIGHT: | SHEET 1 OF 1

PROPRIETARY AND CONFIDENTIAL

THE INFORMATION CONTAINED IN THIS DRAWING IS THE SOLE PROPERTY OF <INSERT COMPANY NAME HERE>. ANY REPRODUCTION IN PART OR AS A WHOLE WITHOUT THE WRITTEN PERMISSION OF <INSERT COMPANY NAME HERE> IS PROHIBITED.

5 4 3 2 1

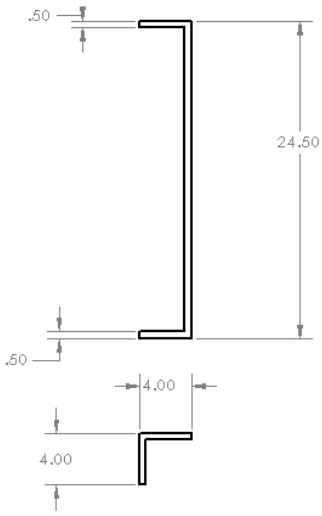

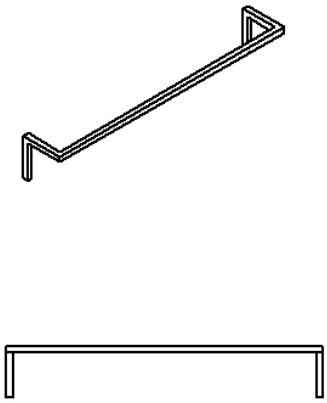

		UNLESS OTHERWISE SPECIFIED:		NAME	DATE
		DIMENSIONS ARE IN INCHES TOLERANCES: FRACTIONAL ± ANGULAR: MACH ± BEND ± TWO PLACE DECIMAL ± THREE PLACE DECIMAL ±	DRAWN		
			CHECKED		
			ENG APPR.		
			MFG APPR.		
		INTERPRET GEOMETRIC TOLERANCING PER:	Q.A.		
		MATERIAL	COMMENTS:		
NEXT ASSY	USED ON	FINISH			
APPLICATION		DO NOT SCALE DRAWING			

TITLE:

SIZE A | DWG. NO. Handle | REV

SCALE: 1:8 | WEIGHT: | SHEET 1 OF 1

PROPRIETARY AND CONFIDENTIAL

THE INFORMATION CONTAINED IN THE DRAWING IS THE SOLE PROPERTY OF <INSERT COMPANY NAME HERE>. ANY REPRODUCTION IN PART OR AS A WHOLE WITHOUT THE WRITTEN PERMISSION OF <INSERT COMPANY NAME HERE> IS PROHIBITED.

5 4 3 2 1

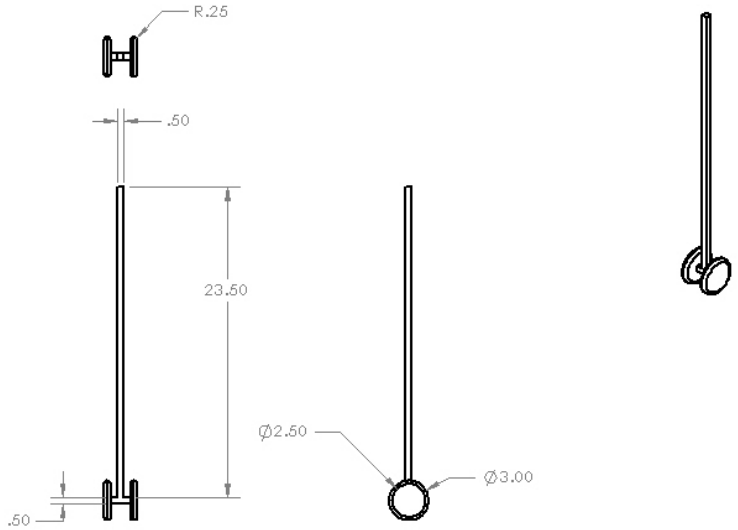

		UNLESS OTHERWISE SPECIFIED:		NAME	DATE
		DIMENSIONS ARE IN INCHES TOLERANCES: FRACTIONAL ± ANGULAR: MACH ± BEND ± TWO PLACE DECIMAL ± THREE PLACE DECIMAL ±	DRAWN		
			CHECKED		
			ENG APPR.		
			MFG APPR.		
		INTERPRET GEOMETRIC TOLERANCING PER:	Q.A.		
		MATERIAL	COMMENTS:		
NEXT ASSY	USED ON	FINISH			
APPLICATION		DO NOT SCALE DRAWING			

TITLE:

SIZE A | DWG. NO. Wheel | REV

SCALE: 1:8 | WEIGHT: | SHEET 1 OF 1

PROPRIETARY AND CONFIDENTIAL

THE INFORMATION CONTAINED IN THIS DRAWING IS THE SOLE PROPERTY OF <INSERT COMPANY NAME HERE>. ANY REPRODUCTION IN PART OR AS A WHOLE WITHOUT THE WRITTEN PERMISSION OF <INSERT COMPANY NAME HERE> IS PROHIBITED.

5 4 3 2 1

Prototype Scale and Digital Image

Scale: 1:2

Design Features

This design features sides that fold onto the base of the shopping cart and foldable wheels. The front set of wheels are slightly off-placed with the rear wheels for easy folding. There is a removeable plate resting on cross beams on the wheels. Once the first pair of sides are folded in then the removable plate is taken out and place on top of the folded sides, then the rest of the sides are folded in.

Working Mechanisms

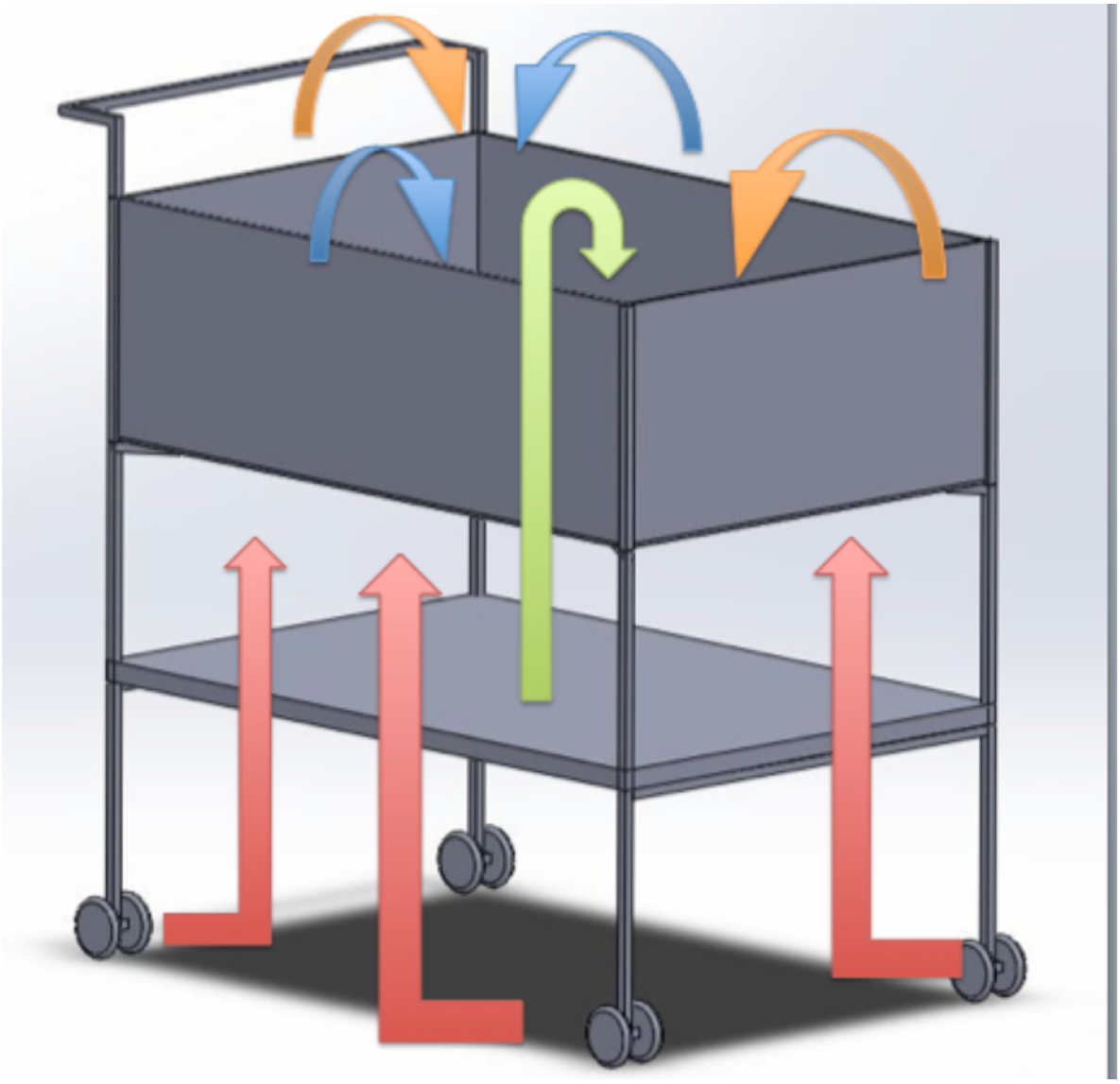

1. Blue Arrows- Step 1- Fold in side walls
2. Green Arrow- Step 2- Put removable platform on top of folded side walls
3. Orange arrows- Step 3- Fold in front and back walls
4. Red Arrows- Step 4- Fold wheels up underneath the base

Cost analysis

Item	Cost Per Unit	Quantity	Total Cost
PVC Piping (1 in x 10 ft) (For Frame)	$3.49	4	$13.96
Plywood Bases (1/4 in x 4 ft x 8 ft)	$13.28	1	$13.28
2 in Chicken Wire Roll (2ft x 25ft) (For sides)	$6.99	1	$6.99
Wheels (6 in diameter)	$7.32	4	$29.28
Total Cost			$63.51

The total cost is slightly over the original $50 budget, but both the plywood and the wheels are too large, so if smaller pieces of plywood and smaller wheels could be purchased, the cost would be closer to budget.

Conclusion

The project on the whole was a success for us. The cart was stable, able to carry heavy loads, and moveable. We followed the design process from recognition of the problem to the building of the prototype. We recognized the issue of having shopping carts that take up too much space, and did something about it. However, there were some things we know we could improve on. Some people may suggest the ease of handling when going up steep inclines or declines. Others would complain over the aesthetics of the design, or the issues with lifting the platform from the bottom and placing it on top without developing back problems. If given more time, we could make it fit into even smaller places, like maybe a backpack or large bag. In the end, we believe that we did the best with the time given to us on this project.