http://www.personal.psu.edu/lgc5099/edsgn100_fa15_section009_team4_dp1.pdf

EDSGN 100

Section 009, Team #4

Revolving Blade

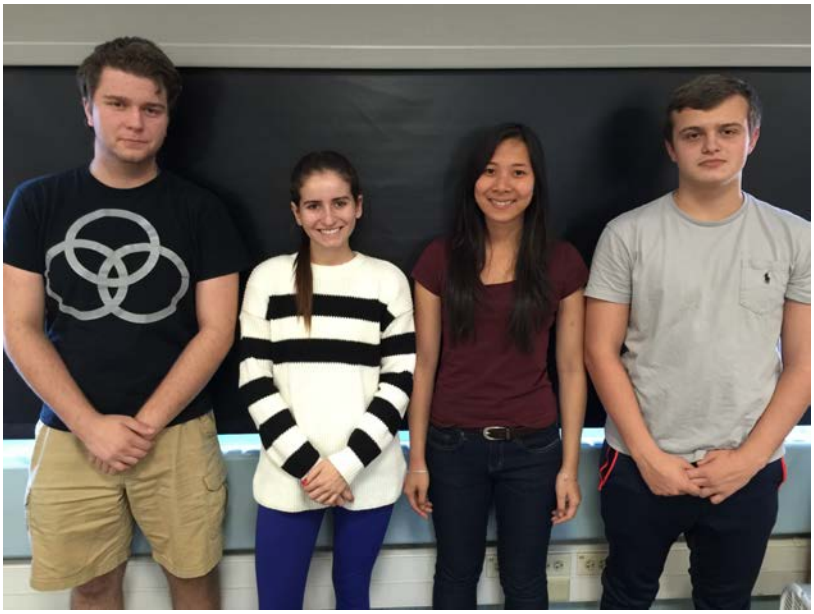

Submitted by: Tamara Paz, Eva Wu Wu, Jonathan Turner, Logan Caswell

Submitted to: Xinli Wu

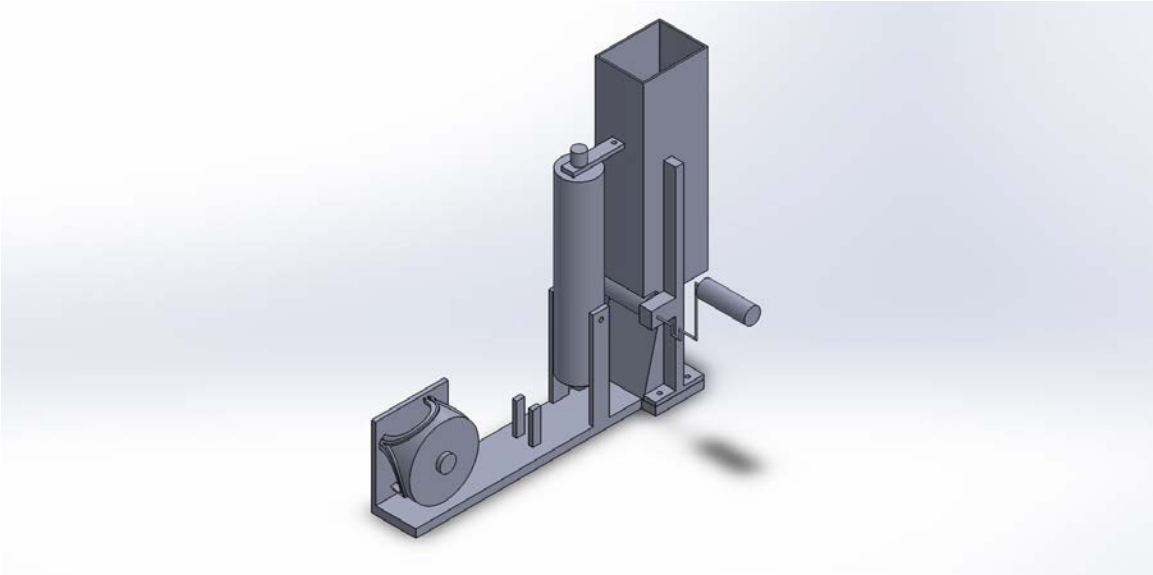

Fall 2015

Abstract

The dumpling maker machine team four created is simple, easy to use, and efficient. The whole purpose was to create a machine that would make at least ten dumplings per minute and with a budget of $200. The team successfully achieved this with a portable machine of only three main parts.

Table of Contents

Cover Page…… (Tamara Paz)
Abstract…… ii (Tamara Paz)
Table of Contents…… iii (Tamara Paz)
Introduction…… 1 (Eva Wu Wu)
Description of the Design Task
- Problem Statement…… 2 (Eva Wu Wu)
- Mission Statement…… 2 (Eva Wu Wu)
- Design Specifications…… 2 (Eva Wu Wu)

Design Approach
- Project Management - Gantt Chart…… 3 (Eva Wu Wu)
- Customer Needs Assessment…… 4 (Tamara Paz)
- Concept Generation…… 5-7 (Team)
- Design Selection Matrices…… 8 (Tamara Paz)

The Final Design and its Prototype
- A Complete Set of Working Drawings of Final Design.. 9-10 (Jonathan Turner)
- Prototype Scale…… 11 (Jonathan Turner)
- Digital Images of Prototype…… 11-13 (Jonathan Turner)
- Design Features…… 13 (Eva Wu Wu)
- Operation Instructions…… 13 (Jonathan Turner)

Engineering Analysis
- Working Mechanism…… 14 (Logan Caswell)
- Cost Analysis…… 15 (Logan Caswell)

Summary and conclusions…… 16 (Logan Caswell)
References…… 17 (Tamara Paz)

Introduction

This project was proposed to serve as an Introduction to Engineering Design. The goal was to follow the design process to design a semi-automatic dumpling machine that met both the professor's specifications and the customer's needs. In order to do so, the team interviewed different restaurants on their criteria of a good dumpling machine, brainstormed several ideas, and used a design matrix to obtain a final, selected design. Later, with the skills obtained from the course, the team was able to work on drawings to portray the design in such a way that everyone will understand it, by providing multiview and isometric drawings, and also a prototype to best represent the idea. To ensure that the design fit in the cost specifications, the team selected the cheapest yet most durable materials, provided in a cost analysis chart. In all, the team obtained a cost effective, portable, and easy to handle and operate dumpling machine.

Description of the Design Task

Problem Statement

In today's market, a dumpling machine could cost up to more than a thousand dollars, depending on its capabilities and quality. However, a dumpling machine that is both cost effective and appealing to the potential customer by their own criteria of a good dumpling machine has to be obtained. To do this, the team has to gather enough information and knowledge revolving around the mechanisms of making a dumpling, and work on the design of a machine that fulfills these requirements by taking into account the time and budget constraints demanded.

Mission Statement

The ultimate goal of this team is to build a dumpling machine that fits in the requirements of a good dumpling machine by customers' analysis. Throughout the time given, the team will provide different approaches on creating an appropriate machine, then select the best design and provide the specifications, and finally work on a prototype that best resembles the final product.

Design Specifications

- The dumpling maker should be automatic or semi-automatic.
- The dumpling maker should produce no less than 10 dumplings per minute on average.
- The material cost for the dumpling maker should not exceed $200 unless it can be justified.
- The dumpling maker should be safe as a food processor, easy to maintain, safe to use, and dishwasher safe.

Design Approach

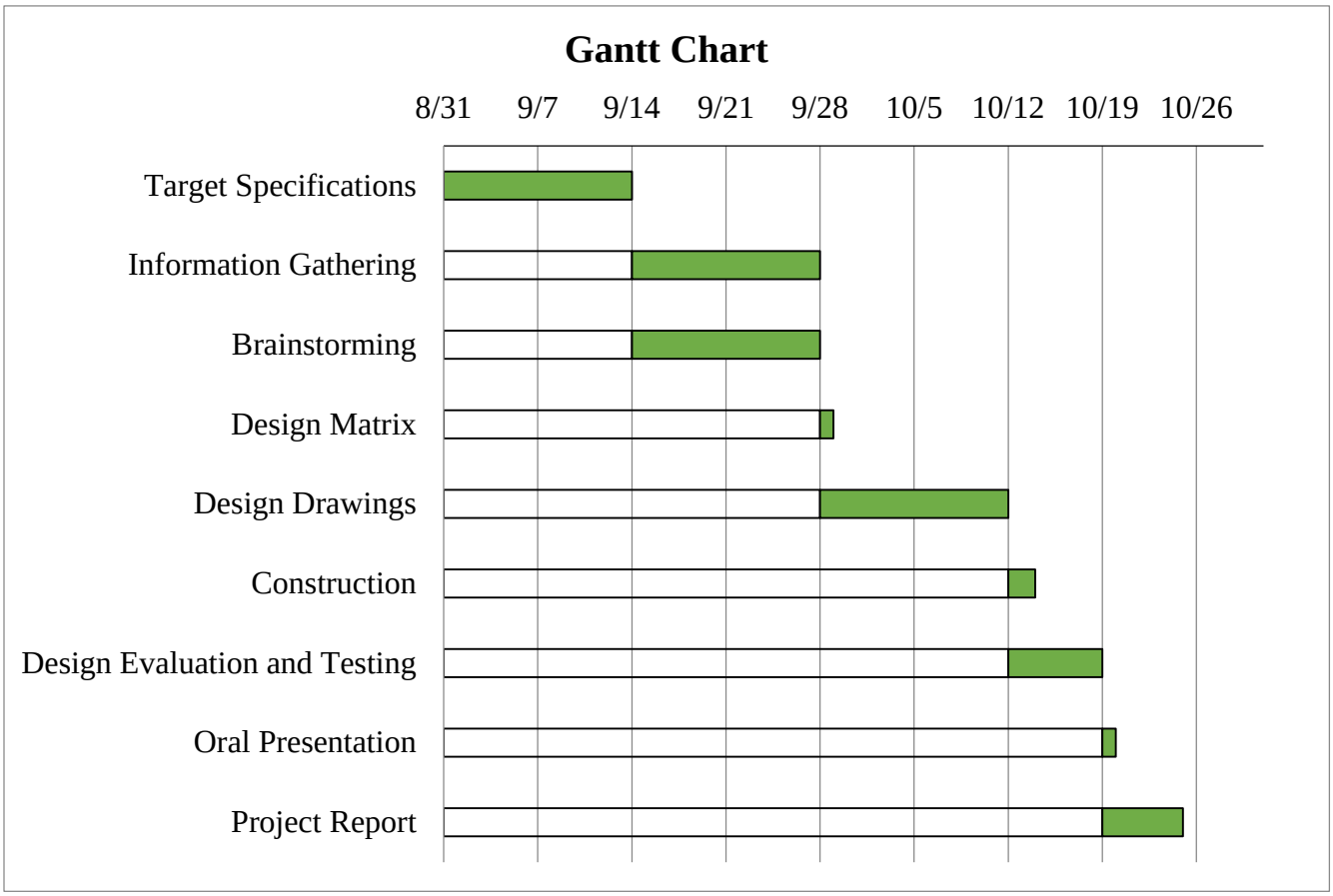

Graph 1. This chart shows the team's progress throughout the design process.

Customer Needs Assessment

Table 1. Customer-Needs

Customer Needs	Customer 1	Customer 2
Ease of handling	2	4
Ease of use	4	4
Durability	4	5
Ease of manufacture	5	3
Portability	1	2
Speed	5	4
Quality of dumpling	5	4

Following a scale of one to five (one being the least and five the most), customers rated in order of importance their needs for a dumpling machine.

Concept Generation

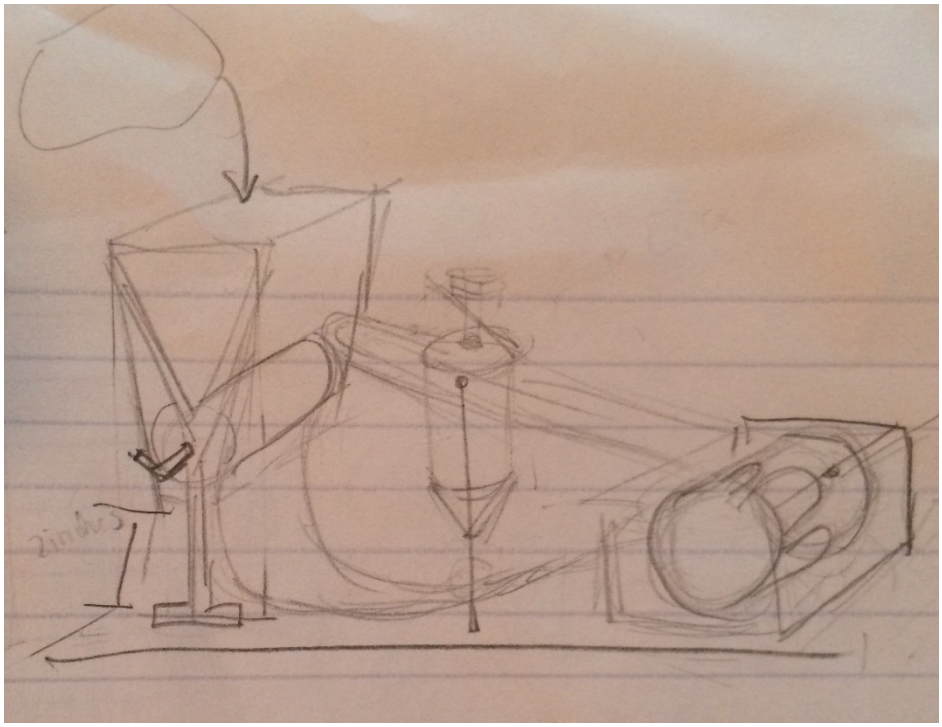

FIG 1. Design A

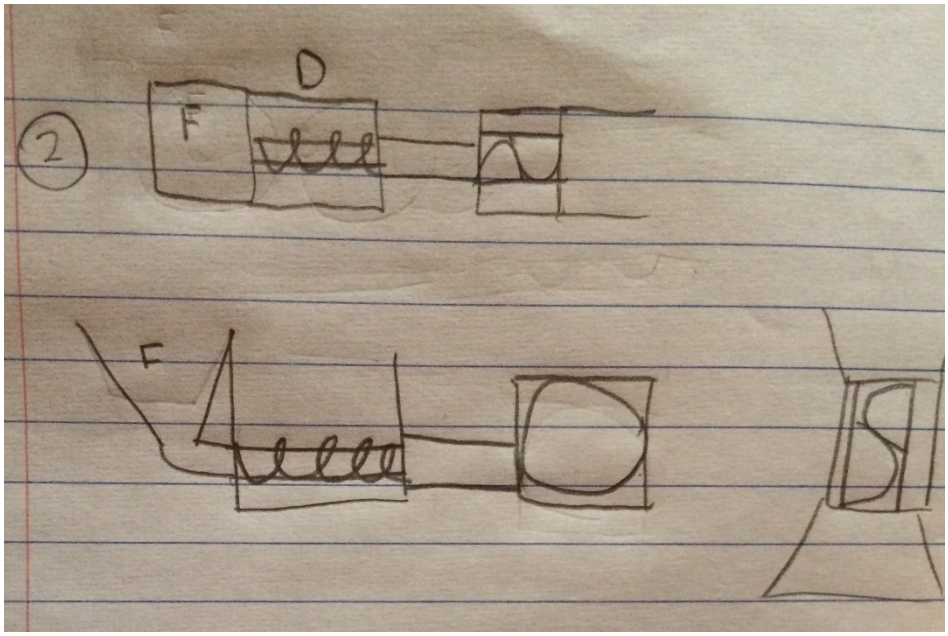

FIG 2. Design B

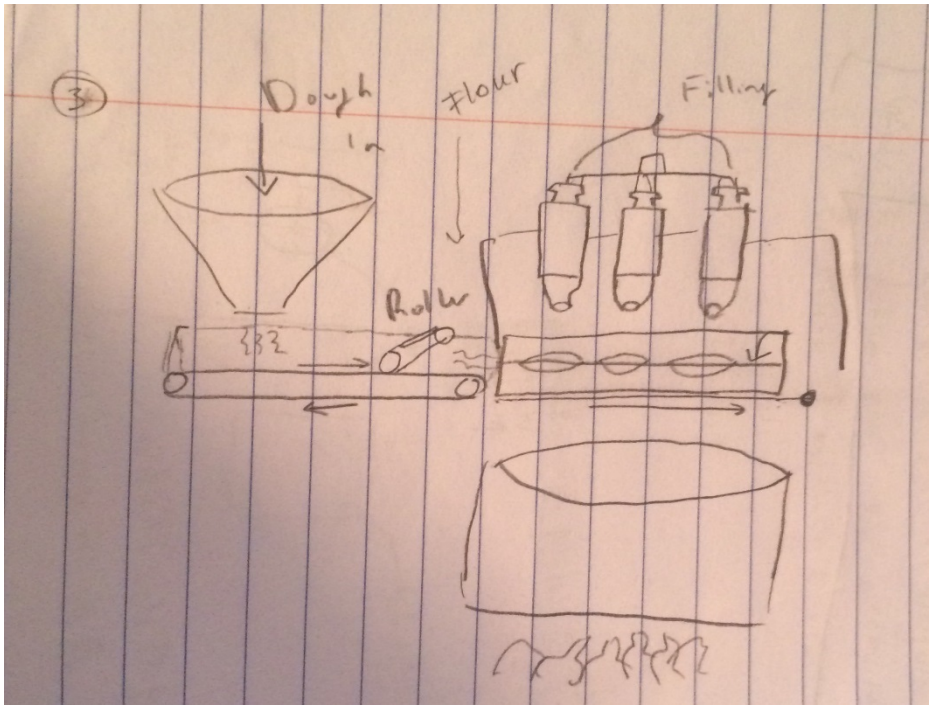

FIG 3. Design C

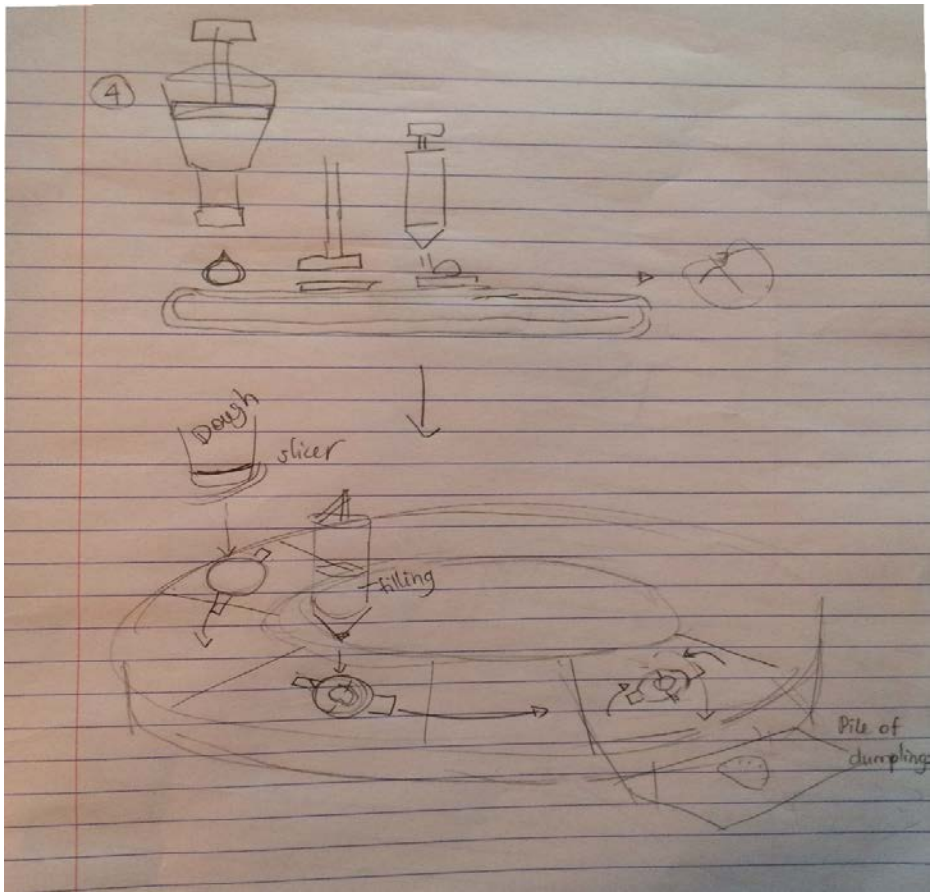

FIG 4. Design D

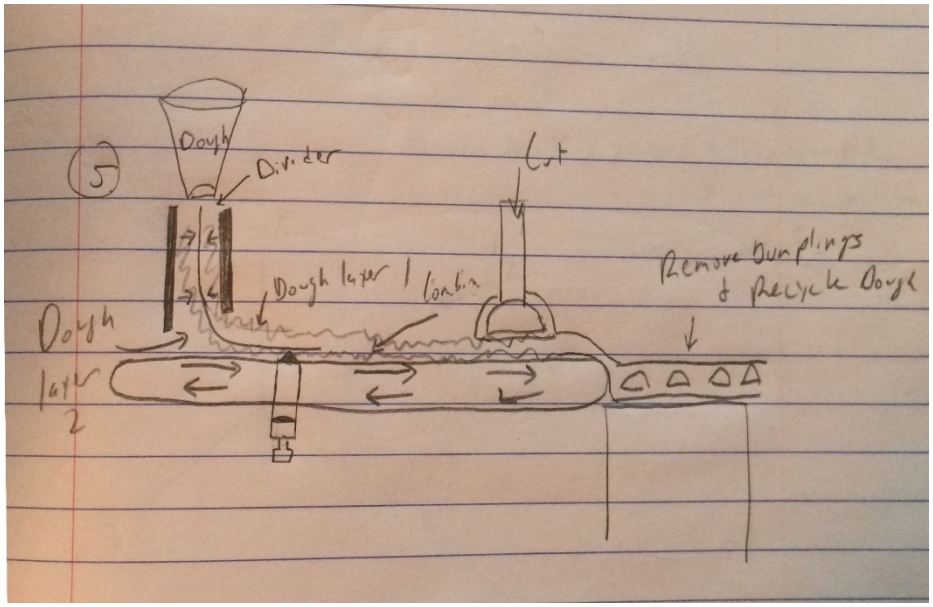

FIG 5. Design E

Design Selection Matrices

Table 2. Design Matrix

	Concepts				
Selection Criteria	A	B	C (reference)	D	E
Ease of handling	+	+	0	0	0
Ease of use	-	+	0	0	0
Durability	0	-	0	-	0
Ease of manufacture	+	-	0	0	-
Portability	+	-	0	0	0
Speed	+	+	0	0	0
Quality of dumpling	0	+	0	0	-
Sum +'s	4	4	0	0	0
Sum 0's	2	0	7	6	5
Sum -'s	1	3	0	1	2
Net score	3	1	0	-1	-2
Rank	1	2	3	4	4
Continue?	Yes	Yes	No	No	No

Table 3. Concept Selection

		Concepts					
Selection Criteria	Weight	Design C (reference)		Design A		Design B	
		Rating	Weighted score	Rating	Weighted score	Rating	Weighted score
Ease of handling	10%	3	0.3	5	0.5	5	0.5
Ease of use	15%	3	0.45	2	0.3	4	0.6
Durability	10%	3	0.3	3	0.3	1	0.1
Ease of manufacture	15%	3	0.45	5	0.75	1	0.15
Portability	5%	3	0.15	5	0.25	2	0.1
Speed	20%	3	0.6	4	0.8	4	0.8
Quality of dumpling	25%	3	0.75	3	0.75	4	1
Total score	100%		3		3.65		3.25
Rank			3		1		2
Continue?			No		Yes		No

The Final Design and its Prototype

A Complete Set of Working Drawings of Final Design

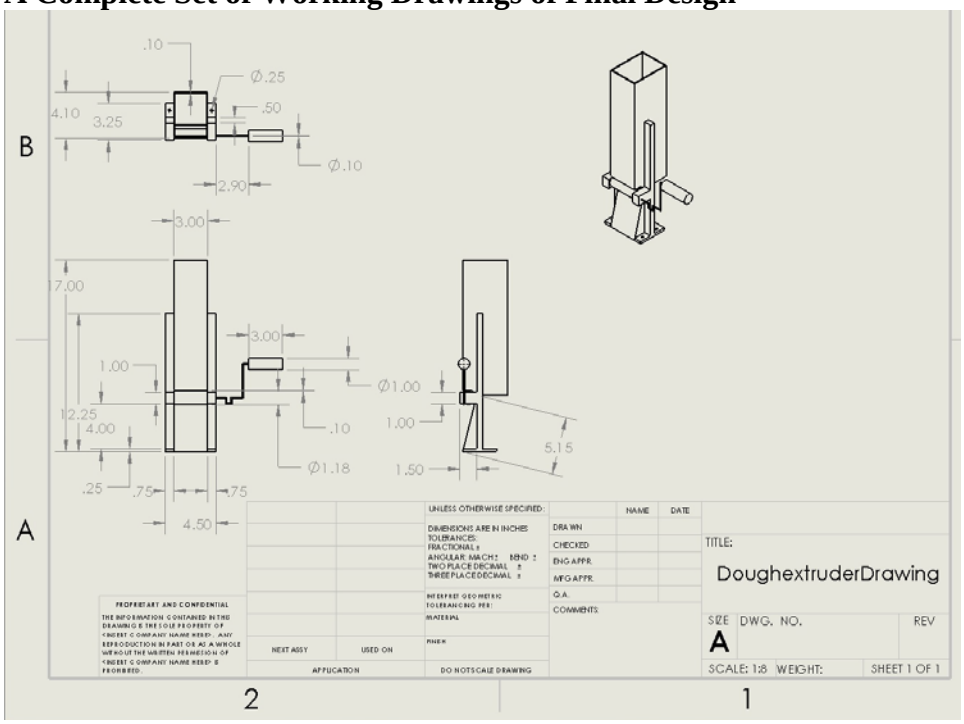

FIG 6. Dough Extruder Working Drawing

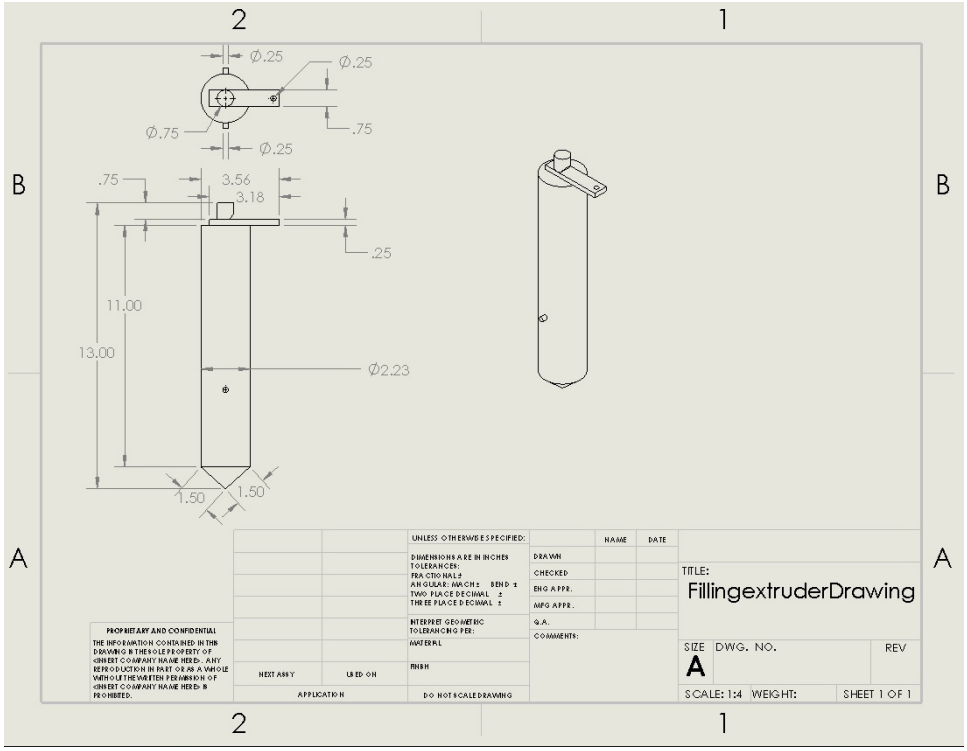

FIG 7. Filling Extruder Working Drawing

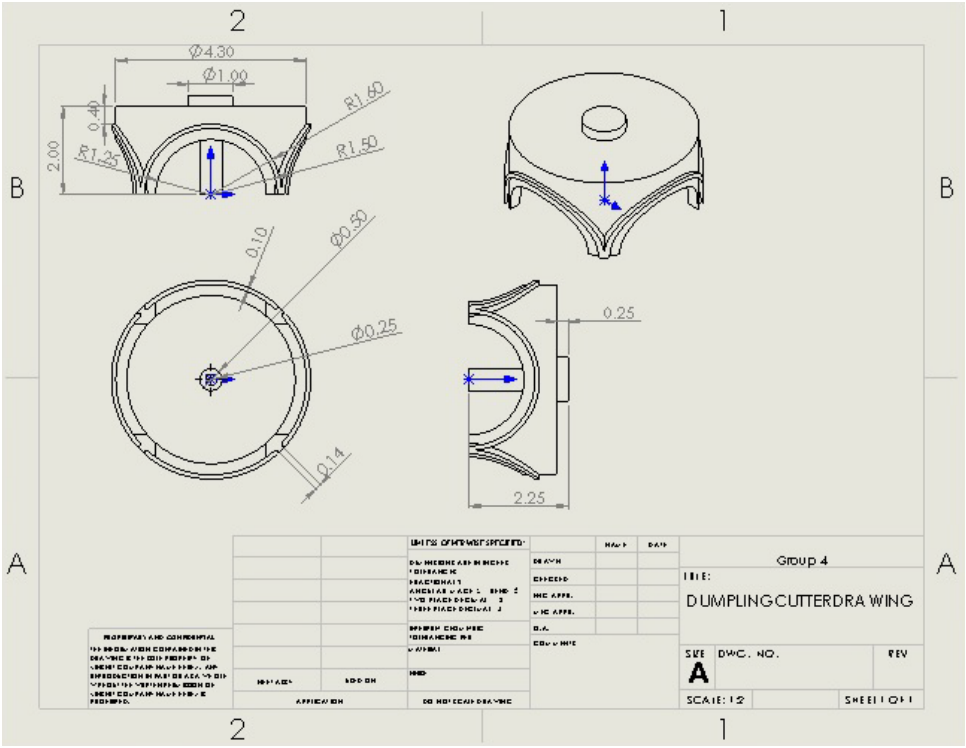

FIG 8. Dumpling Cutter Working Drawing

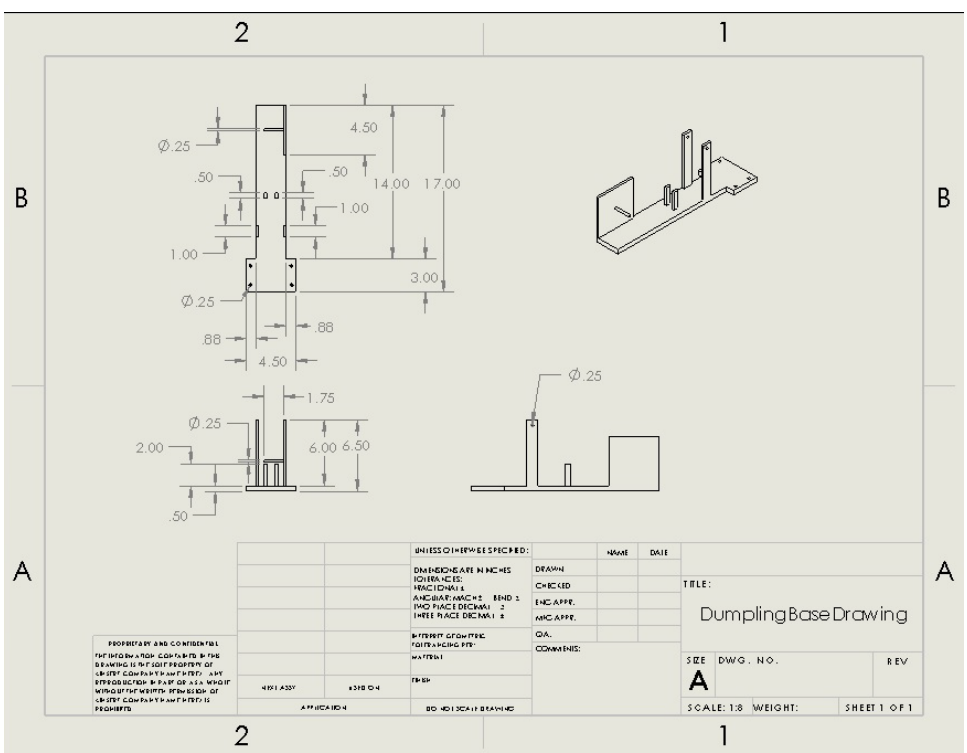

FIG 9. Dumpling Base Working Drawing

Prototype Scale

FIG 10. Prototype. Scale 1:2

Digital Images of Prototype

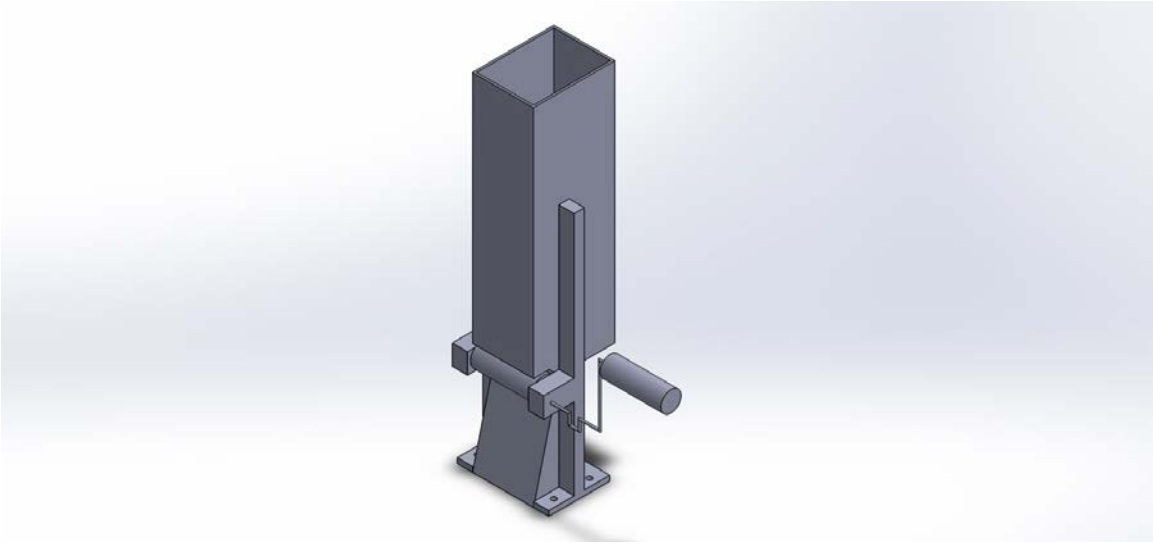

FIG 11. Dough Extruder

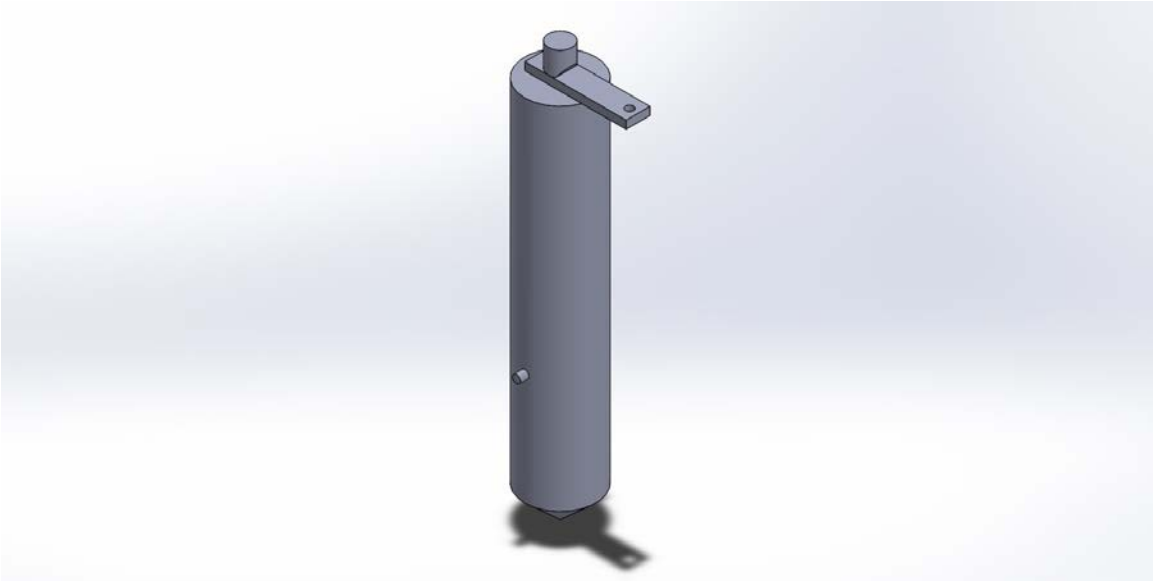

FIG 12. Filling Extruder

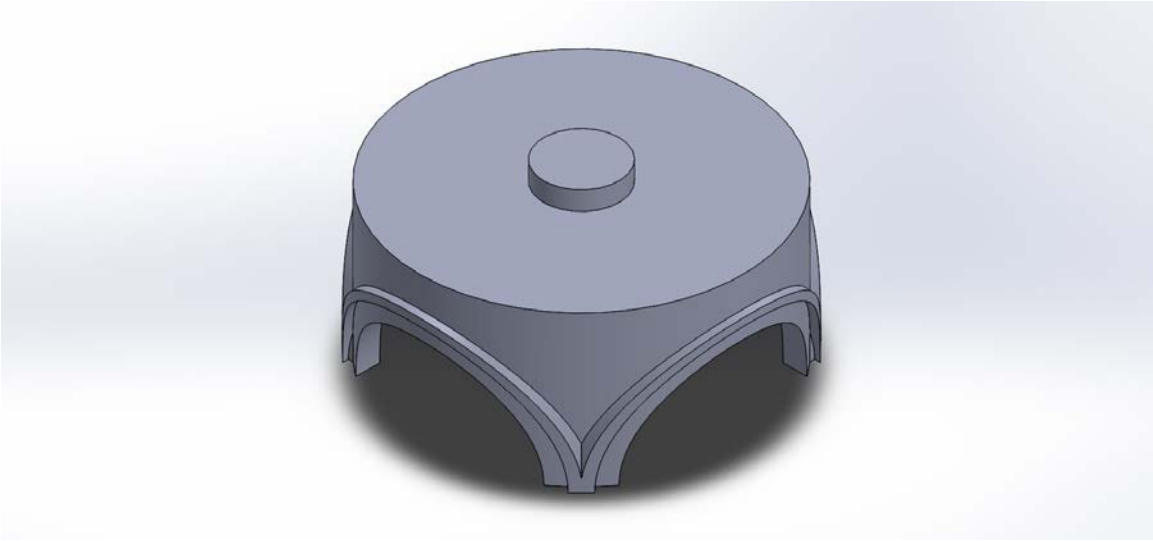

FIG 13. Dumpling Cutter

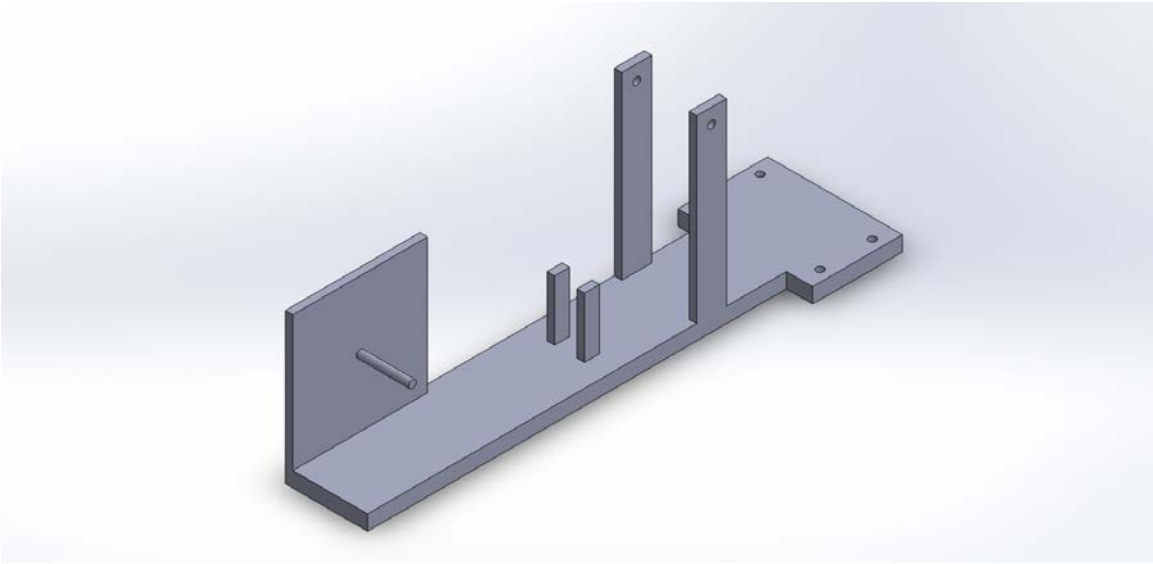

FIG 13. Dumpling Base

Design Features

This design features a dough extruder where the premade dough is put into, a filling extruder where the mixture is added, a wheel-shaped cutter that shapes the dumplings, and a base that keeps the parts together.

Operating Instructions

1. Insert the pre-made dough into the dough extruder.
2. Turn handle and feed dough through the posts and into the cutter.
3. Put the filling into the filling extruder and insert the piston into the posts.
4. Crank handle and assist the dumplings out of the cutter.
5. Recycle excess dough into the extruder.

Engineering Analysis

Working Mechanism

This dumpling maker operates in a four-step process (not including making the dough.) The process begins with rolling the dough into a thin sheet, which is done by placing pre-made dough into a container with a hole on the bottom. This hole leads to a roller that flattens the dough. A handle connected to the side operates the roller. Once the dough is flattened the dumpling filling is placed in intervals on it by means of a syringe like part, which is in sync with the crank handle. Two short parts protruding from the track then fold this dough. Once folded, the dough is then cut by a spinning wheel. The wheel is also connected to the handle with a belt. The result is quickly made dumplings.

The speed at which dumplings are made depends on several factors. The first of which being the amount of dough added to the machine. Our machine can hold approximately enough dough to create 20 dumplings at a time. The second factor is the speed at which one can refill the machine. Refilling the machine requires one to feed the dough through the track for the first dumpling, which means it requires a little time. Therefore, if somebody becomes efficient at using the machine they should be able to make up to 40 dumplings a minute (2 refills per minute.) This safely meets the requirement of 10 per minute.

Cost Analysis

Part	Material	Amount	Price
Base	Plastic	42.25 cubic in	$25.17
	Metal	.086 cubic in	$0.45
	Screws	6 (1/2 in)	$0.72
Dough Extruder	Plastic	30.97 cubic in	$18.89
	Handle	1	$20.38
	Metal	.098 cubic in	$0.51
Dough Cutter	Plastic	3.9 cubic in	$2.38
Filling Extruder	Plastic	13.02 cubic in	$7.94
Belt	Rubber	24 in	$3.90
		Total Price	$80.34

Conclusion

The main intents for this machine were to be easy to use, durable, and cost efficient. It seems we met all three of these criteria. The machine is very easy to use and requires one to just turn and handle to make the dumplings. Although the machine is made of plastic it is still sturdy enough to make dumplings. Dumplings are made of all soft materials and therefore do not really need metal to cut them, roll them, etc. This also increases safety since no sharp blades are involved. The mechanical parts such as axels and the supports are made of metal to add even more support. The use of plastic rather than metal for the majority of the machine reduces the cost significantly, and as a result gives the machine an appealing price of $80.34

A suggestion for the future is to keep things simple. Simplicity increases safety and reduces the price. Just because something is more complex does not mean it is better. Innovative ideas can be simple.

References

McMaster-Carr. (n.d.). Retrieved October 25, 2015, from http://www.mcmaster.com/