Design Project #1

Replacement of Vehicle Bridge over Spring Creek

Centre County, PA

Introduction to Engineering Design

EDGSN 100 Section 001

6

Ashvath Rajmohan

Lisa Livote

Theodore Calnon

Jerrel Hill

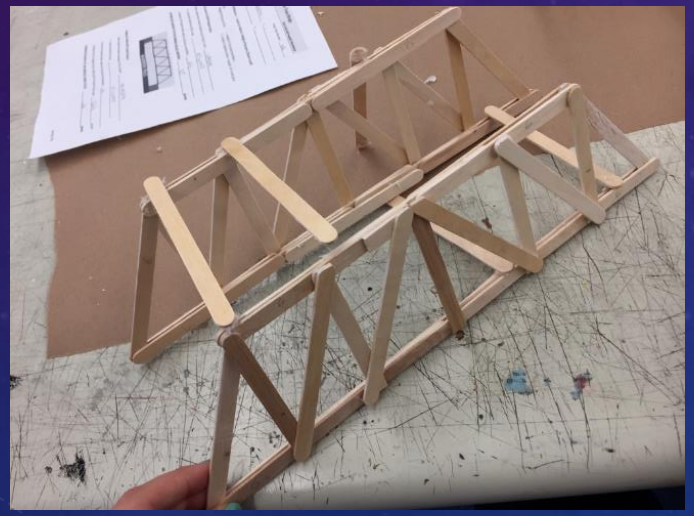

Presented to:

Prof. Berezniak

Spring 2016

PROBLEM

- A flood in Spring Creek destroyed what was a structurally deficient bridge

OBJECTIVE

- Fast-track the design and building of a replacement bridge

DESIGN CRITERIA

- PennDOT assigned specific criteria regarding which beams to include, material, deck elevation, and deck span

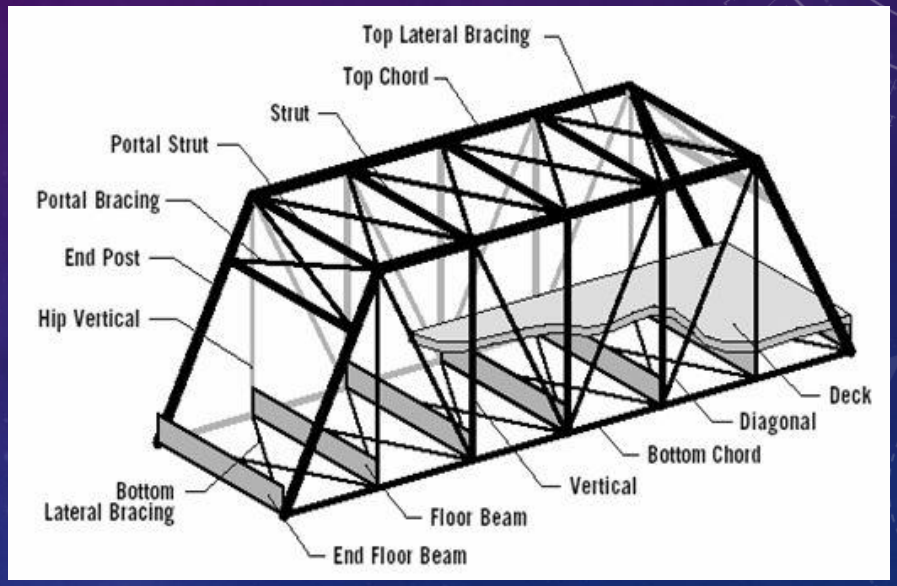

TECHNICAL APPROACH PHASE 1: ECONOMIC EFFICIENCY

- Economic Efficiency will be calculated using software based on requirements, constraints, and performance criteria

TECHNICAL APPROACH

PHASE 2: STRUCTURAL EFFICIENCY

- Design and build two bridge prototypes- one Howe Truss and one Warren Truss
- Determine and report which bridge type works best

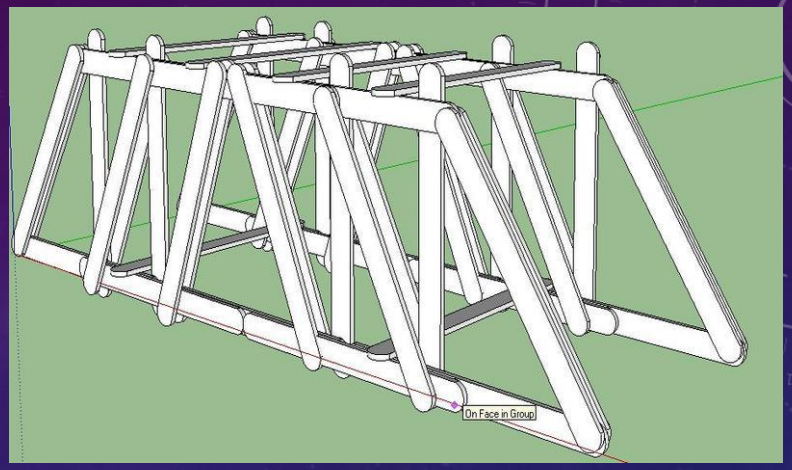

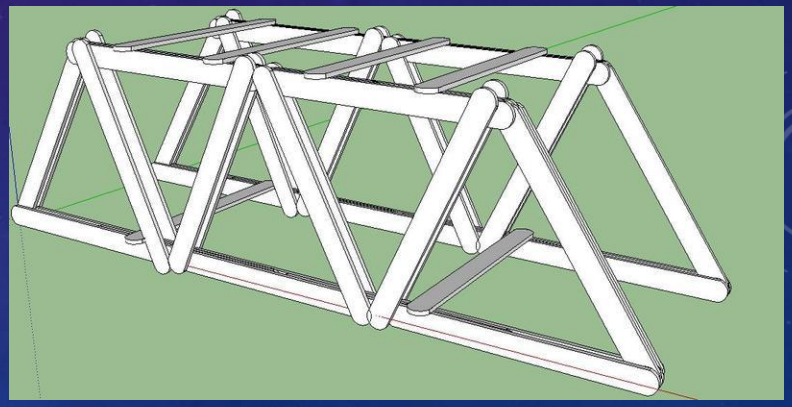

RESULTS

PHASE 1: ECONOMIC EFFICIENCY

- An important part of figuring out how to get cost minimalized was limiting the number of types of parts, knowing where stresses and tensions are located, and knowing where we can use less material
- Howe Truss Design Efficiency = 1160.5
- Warren Truss Design Efficiency = 1095.8

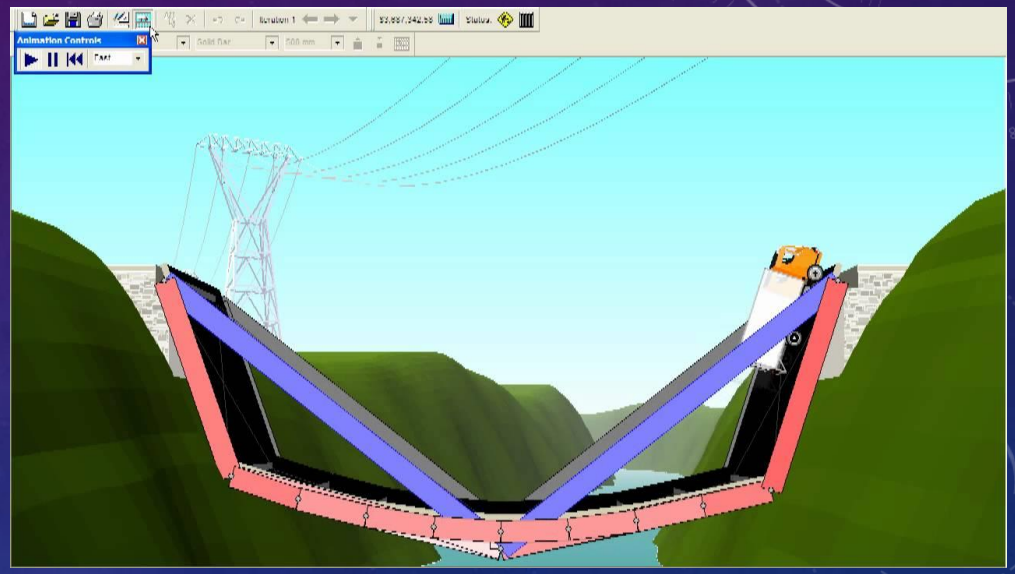

RESULTS

PHASE 2: STRUCTURAL EFFICIENCY

HOWE Truss Bridge				
Design Team No.	Actual Bridge Weight (grams)	LOAD at Failure (lbs)	Load at Failure (grams)	Structural Effeciency
1	78.6	63.5	28803.092	366.4515522
2	77.9	46.2	20955.9504	269.0109166
3	73.2	67.6	30662.8192	418.8909727
4	77.9	108.5	49214.732	631.7680616
5	73.7	33.9	15376.7688	208.6400109
6	72.7	32.6	14787.0992	203.3988886
7	85.1	36.4	16510.7488	194.0158496
			Average	327.4537503

WARREN Truss Bridge				
Design Team No.	Actual Bridge Weight (grams)	LOAD at Failure (lbs)	Load at Failure (grams)	Structural Effeciency
1	71.1	64.3	29166	410.2109705
2	82.1	78	35380.2	430.9403167
3	80.2	114.6	51981.7	648.1508728
4	82.4	56.6	25673.3	311.5691748
5	80.9	33.6	15240.7	188.3893696
6	63.2	32.7	14832.3	234.6882911
7	80.6	59.9	27170.2	337.0992556
			Average	365.8640359

- The Warren Truss Bridge on average proved to me more structurally efficient

CONCLUSIONS AND RECOMMENDATIONS/ BEST SOLUTION

- The Warren Truss Bridge has a better Design Efficiency
- To follow up, steps should be taken to improve flaws found in the bridge design

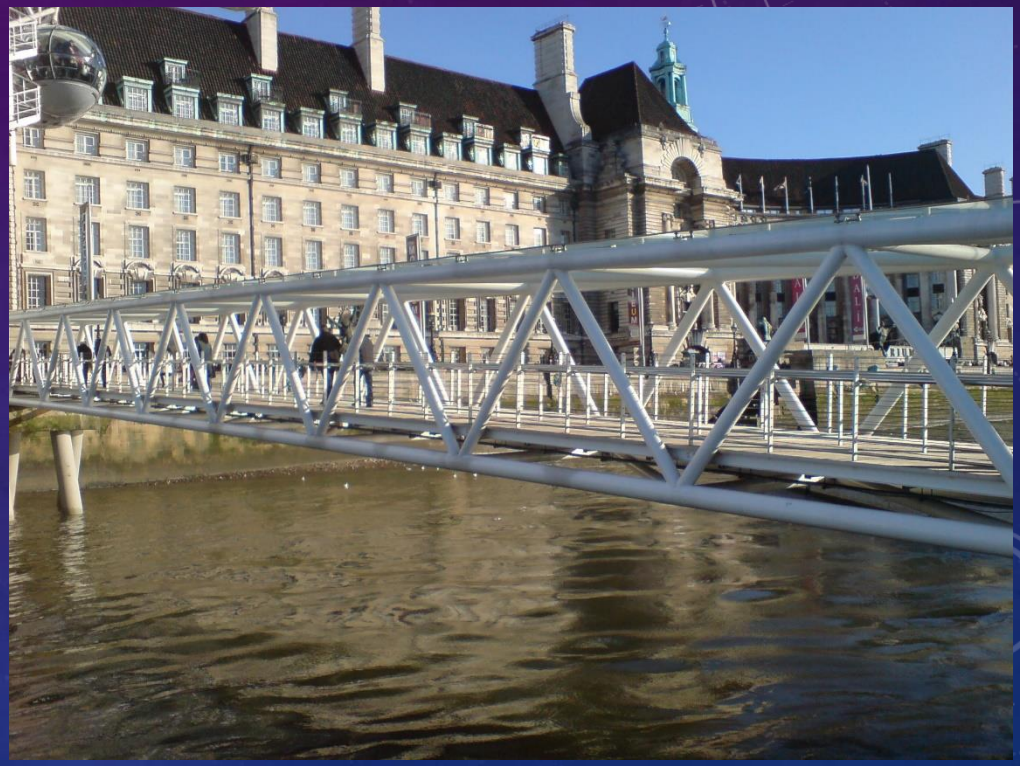

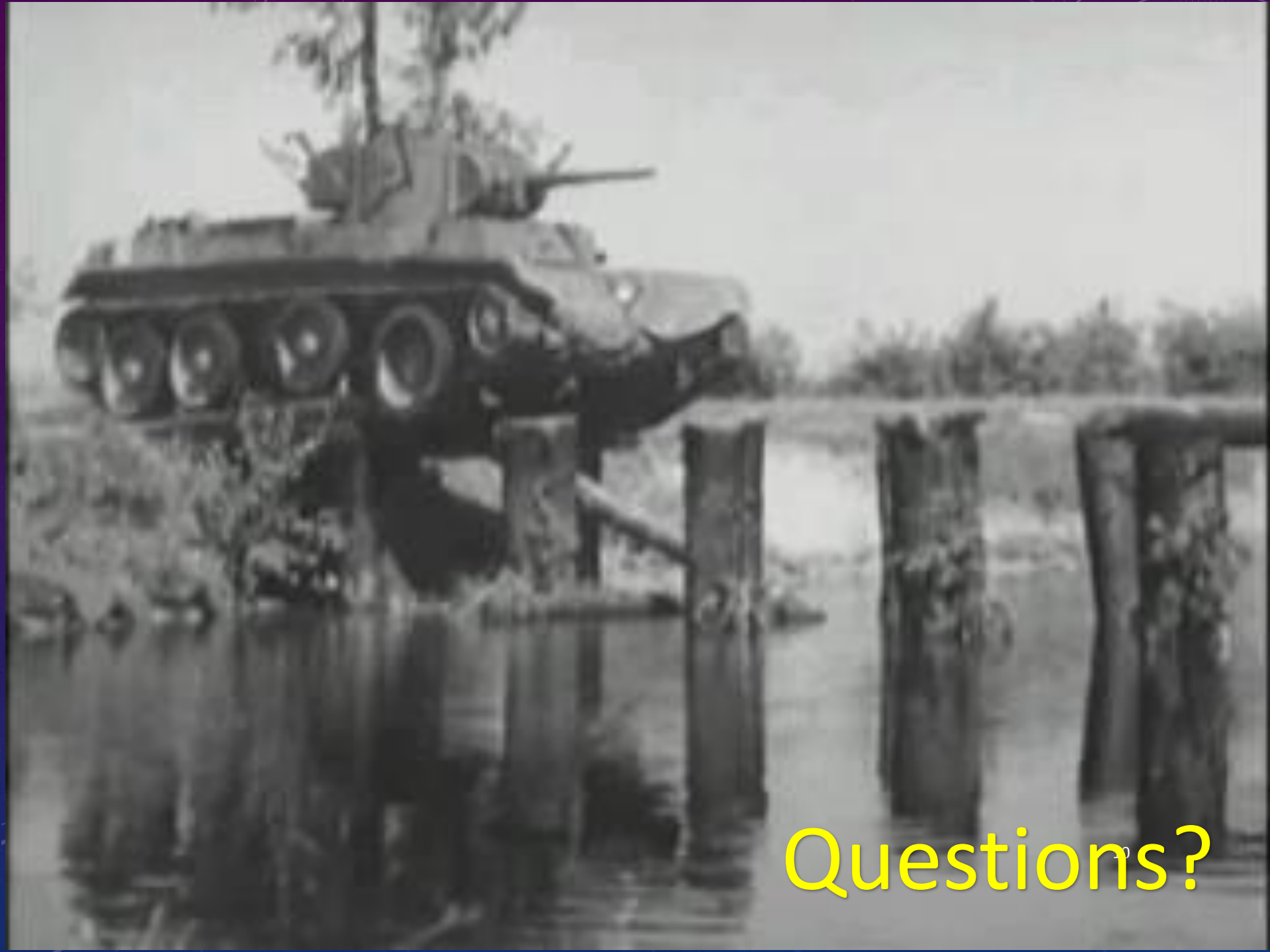
Questions?