USB Hub Mounting Bracket

Engineering Design 100

Section 003

May 2, 2016

The Benchwarmers:

Daniel Chilson

dac5762@psu.edu

John Palfy

jmp6313@psu.edu

Benjamin Gibson

bkg5136@psu.edu

Shijia Zhou

sxz5190@psu.edu

Executive summary:

LockHeed Martin requested an improved version of a USB Hub mounting bracket that they currently use to mount a hub to a control console. The initial steps of this project involved mostly the designing of the part. We were originally shooting for a single part design. We began by hand drawing concepts for the vertical bracket design. Once we generated enough concepts that seemed viable enough for printing we took the design to SolidWorks. In solidworks we made sure that our design fit the specifications that LockHeed Martin outlined. The bracket that we used as our main design has a four point screw system and consists of only one part. It also is designed to hold 3 USB hubs

Introduction:

The main goal of this project was an improvement upon the original bracket design. The bracket is for a USB hub to be mounted for an avionics system.. The original bracket was a single, horizontally mounted bracket that housed a four port USB hub. Since this bracket will be mounted on an aviation console, the main goal was the reduction in parts so that it could be more easily mounted. Along with this, a vertical installation, a triple stacked hub, and vibration reduction was required for the design. Mid way through the project the requirements were changed slightly . The triple stacked hub and the vibration reduction were no longer key requirements. After the change the main focus of part reduction remained the key focus of the new hub.

External Research:

In researching for our bracket, we primarily focused on Three areas to help counter vibration and enhanced stability:

- Material
- Mounting style
- Structure style

Finding the type of material was a major part of the usb hub bracket. For the research, we camp up with three types of material to choose. The research presented in Table 1 was completed by using data provided from various websites and online catalogs. Although Plastic is cheap and lasting longer, the strength is lack compare to others. Stainless steel strength is great, but it is not protracted and very expansive. Ultimately, we choose Aluminum Alloy to use for our bracket. Because of the excellent strength and cost less.

Table 1: ***Specific research data about material***

Type	Plastic(ABS)	Stainless Steel	Aluminum Alloy
Durability	Long-lasting	Long-lasting, but can rust over time	Long-lasting
Strength(Mpa)	70	190-210	180-414
Temperature (℃)	-40-150	-269-1100	-195-200
Cost	$4.00/ cubic inch	$8.00/pound	$3.66/pound

For mounting style, we find out the Din rail mounting is the one that suit for our needs. DIN Rails have been accepted throughout the world, allowing the equipment or panel builder to mount a wide variety of devices on the same rail. Firstly,the use of DIN Rails enhances design capabilities, saves space and reduces labor.Secondly,it not only can handle heavy weight but also easily changeable. Thirdly, they latch to the panel very firmly, even though they are plug-in breakers. Lastly, they are finger safe, cheaper and quicker to install.

For structure style, we researched Mesh structure, find out that it has anti-shock properties and combined with great structural strength. It also allow the minimization of the amount of used material to reach minimal weight and minimal material cost. Moreover, it can make the bracket more aesthetically pleasing.

Customer Needs:

Target specifications were formulated in order to understand what was necessary for customer satisfaction. The primary goal of this project is to reduce the total number of parts for this assembly and provide a vertical installation configuration. A list of customer needs and their related metrics are shown below in Table 3.

Table 3: ***Shows the customer needs and how they are related to similar metrics***

Customer Needs	**Metrics**
USB hub formation	7 port Hub
Mounting orientation	Vertical mount
Reduction of parts	No more than 3 parts
Environmental	From 0 ℃ to 25℃
Vibration	Handle vibration loading
Number of hub	From single usb hub to stacked 3 high

Concept Generation:

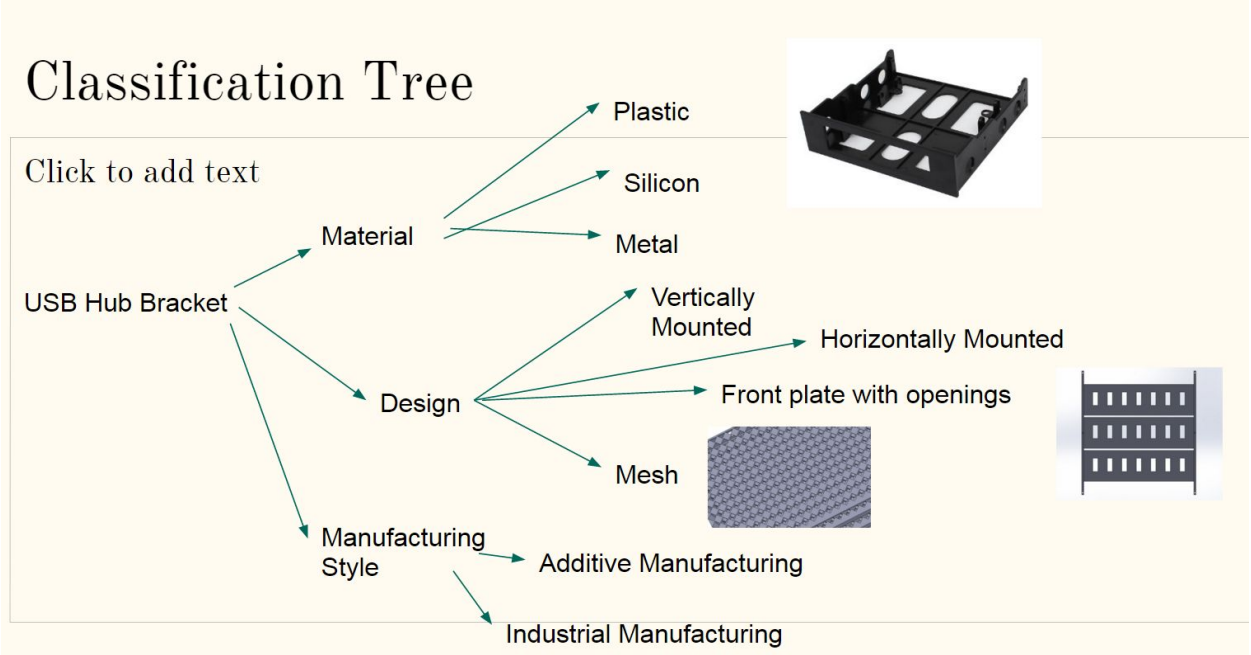

In a brainstorming activity each team member created several USB hub bracket designs. We then discussed the pros and cons of each design. We took the concepts we had created and constructed a classification tree to organize the different aspects of the project. We discussed the material from which our bracket would be built and the capability for each material to absorb shock. We also discussed which design would work best for the project. We thought of the different ways that the hubs could be stacked and how the bracket should be mounted. This project allowed us to use additive manufacturing so we also discussed different ways this manufacturing type could be utilized.

Concept Selection:

Each of the four team members submitted their best design to analyzed for the concept selection. Of the four concepts we chose Dan's (Concept 2), which scored the highest ranking based on: additive manufacturing ease, air flow, aesthetics, stability, and cost efficiency.

	Concept 1	**Concept 2**	**Concept 3**	**Concept 4**
AM Ease (30%)	3	4	4	2
Stability (25%)	2	5	4	3
Air Flow (15%)	4	4	2	5
Aesthetics (15%)	3	5	4	4
Cost Efficiency (15%)	4	3	3	4
Net Score	3.15(63%)	4.25（85%）	3.55（71%）	3.40（68%）

Design Iterations:

Original Design from Lockheed Martin

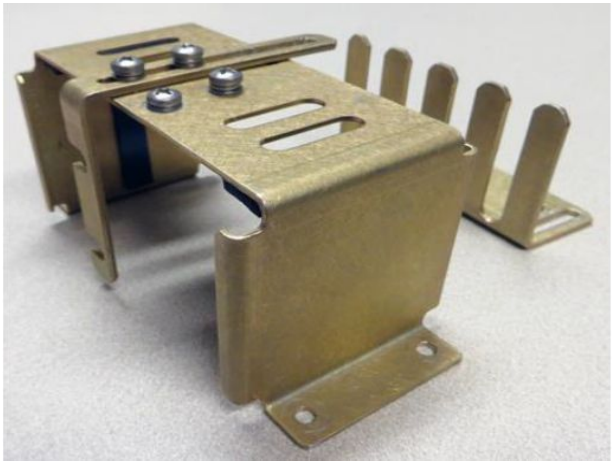

Lockheed Martin asked us to reduce the number of parts from the original prototype, and also to allow for 3 USB hubs stacked on one another

From here we produced several different designs.

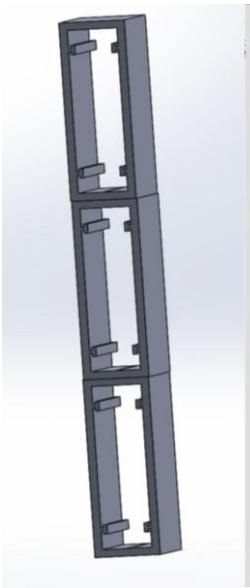

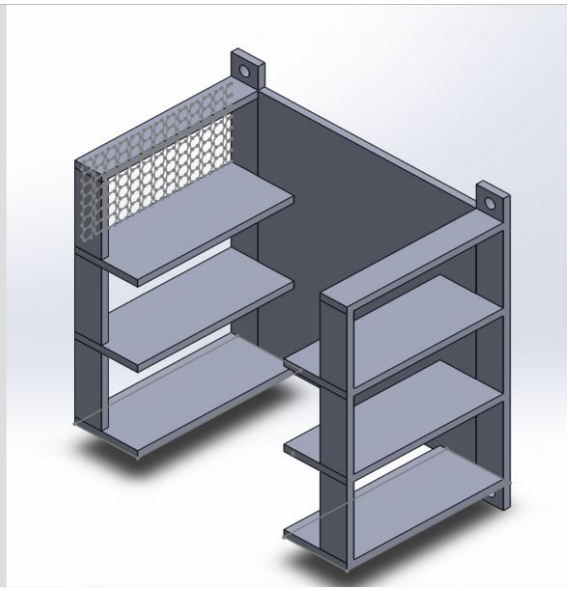

Final Design Description:

Our final design (as pictured below) incorporated ideas from all of our initial designs. We went with Dan's design after group discussion and the concept selection that determined his design met our criteria best. The bracket incorporates the triple stacked horizontal hub layout with 7

vertical ports meeting the original bonus requirement for having a hub quantity of three. The bottom and top panel as well as the several base platforms feature mesh design openings to allow for proper heat flow and ventilation as well as additional aesthetic the added design factor that Lockheed Martin hadn't given as a particular assignment specification but our group decided to account for. Openings were placed between the levels to allow for the insertion of outside manufactured rubber bushings that would handle the vibration load that the company had originally ask we place emphasis on. The part is designed to be printed as a single part, a critical manufacturing specification of Lockheed Martin being the reduction in part quantity to switch over to an additive manufacturing production model that our design was intended to accommodate. Finally, the mounting bars use the four screw system that was required with mounting screws as the only necessary supplemental parts apart from the equipment rack to mount into itself.

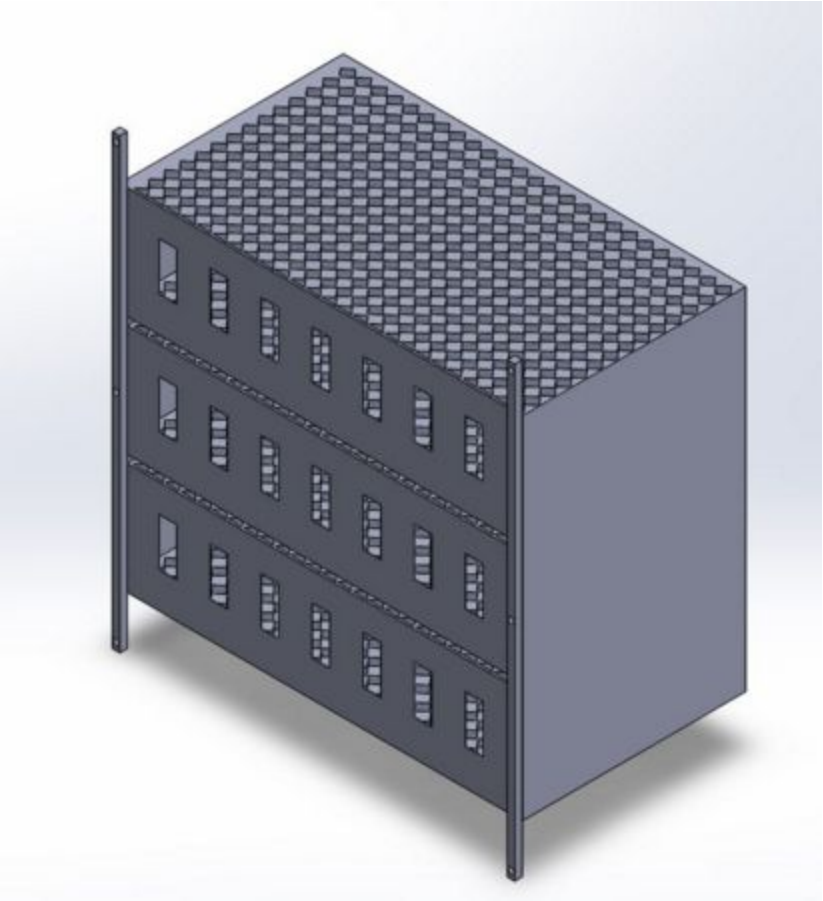

Assessment:
Lockheed Martin required that the new USB Hub Bracket should: have less parts than the given prototype bracket, be able to hold wires in place during vibrations, and be able to hold up to 3 USB hubs. We succeeded in fulfilling these requirements. Our final design iteration consisted of one part (5 if you count the 4 screws required for mounting). Our bracket has the capacity to hold 3 hubs stacked on one another. Each level of our bracket has 7 slots so that wires would stay in place during vibrations. Our mesh design also allows for air to flow so that the Hubs do not overheat when being used simultaneously.

Economic Viability:

Our final design should be very integratable and economically viable. Since the bracket utilizes additive manufacturing as its primary assembly method, it doesn't require outside industrial scale manufacturing and transportation costs. A 3D printer could easily produce a bracket as needed for insertion into one of Lockheed Martin's aircrafts with the proper equipment rack.

Comparison With Existing Design:
Our final design differs from the initial design mainly in that it is all one part, whereas the initial prototype given by Lockheed Martin consists of several different parts. Our final design also has the capability of securing 3 USB hubs in place, where the initial prototype shows the capacity to be 2 hubs. Our final design also has shock absorbers between the hubs to ensure they are protected from the vibrations that could occur. On the initial design the 2 hubs simply rest on one another.

Conclusions:
Additive manufacturing allowed us to design a USB hub bracket that could support 3 hubs, regulate heat, and keep cables secure through vibrations. Through AM we were able to incorporate highly detailed designs into our structure while keeping the total number of parts to a minimum. We learned that by collaborating with each other we were able to produce a final design that incorporated all of the positive aspects of our individual designs. Going forward with the project we could explore different mesh designs as well as types of inserts we could put in to further reduce the vibrations put on the hub. This project given by Lockheed Martin was a great way for us to explore additive manufacturing and its practical uses in industry today.