Personal CAD Project- Lego Car

By: Stefanos Papadopoulos

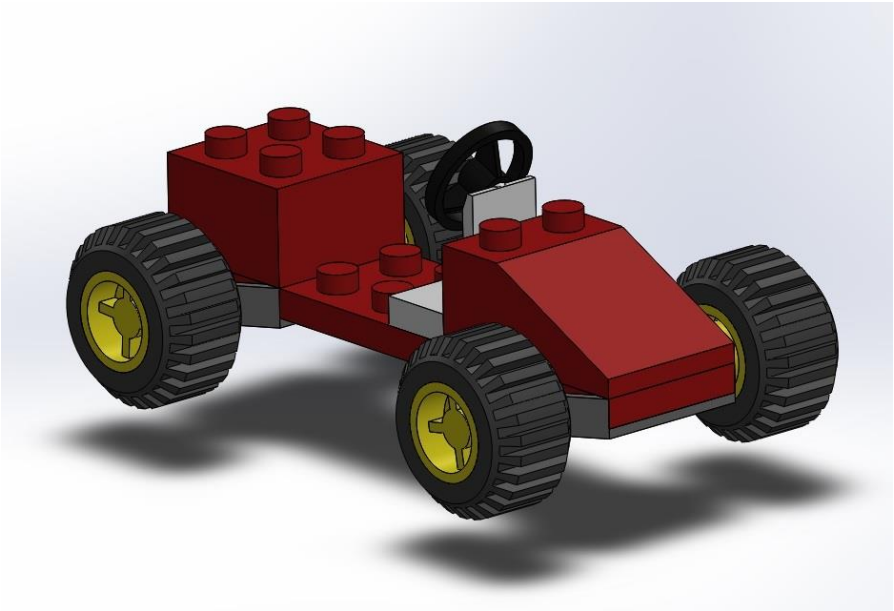

https://d2t1xqejof9utc.cloudfront.net/screenshots/pics/90505ef606badeaec21d515ac530c230/medium.jpg

My CAD project is a reproduction of a small Lego car made up of 15 different parts for children of ages 5-10. Here is a photo of what the actual Lego car looks like:

I chose this product because as a child I spent all of my free time building Legos. I really enjoyed the ability to build interesting structures from blocks. This helped me decide as I got older to become an engineer. Engineering is similar to Legos because you are working with different building blocks to either create a new product or improve a product. I am really interested in the structure of things and how they work. Thus, I am focusing on chemical engineering. I am interesting in how different molecules can interact and come together as different building blocks to create new materials. This is why I chose for my project a Lego car. I thought it would be fun to create because I would be building Legos again just using solid works and it relates to my major. From completely this project I was able to review all of the different solid works techniques I learned the past few weeks and now have a good understanding of how to use it.

As I got older I bought a nitro rc car, where I worked repairing it and changing the different parts. I have seen pictures of these being made using solid works so I plan to alter on produce one of these using solid works or CAD.

These are the different parts included in my project and a CAD front, top, right and isometric sketch view:

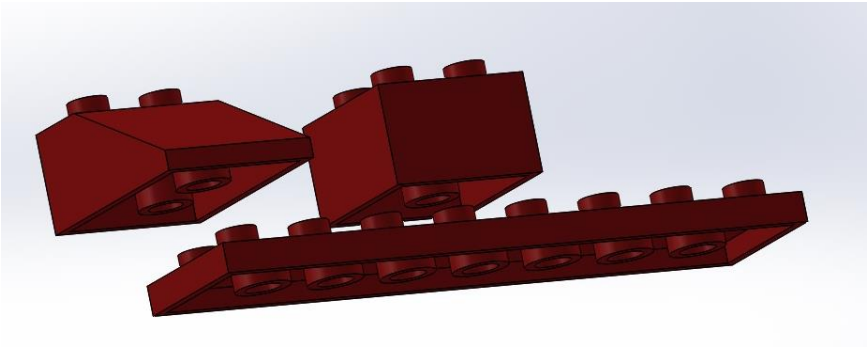

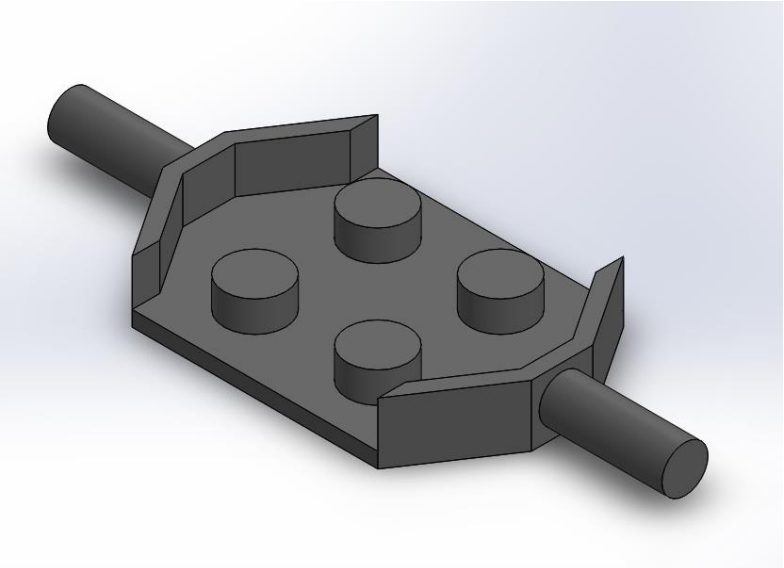

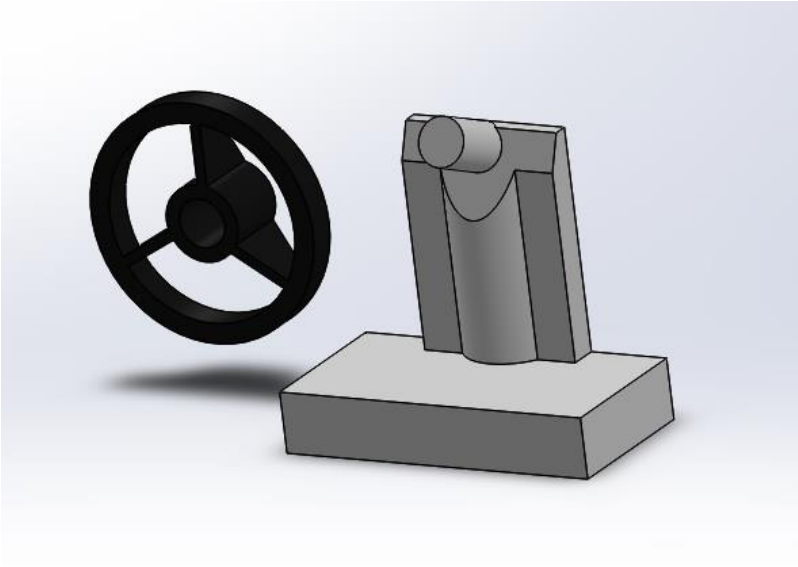

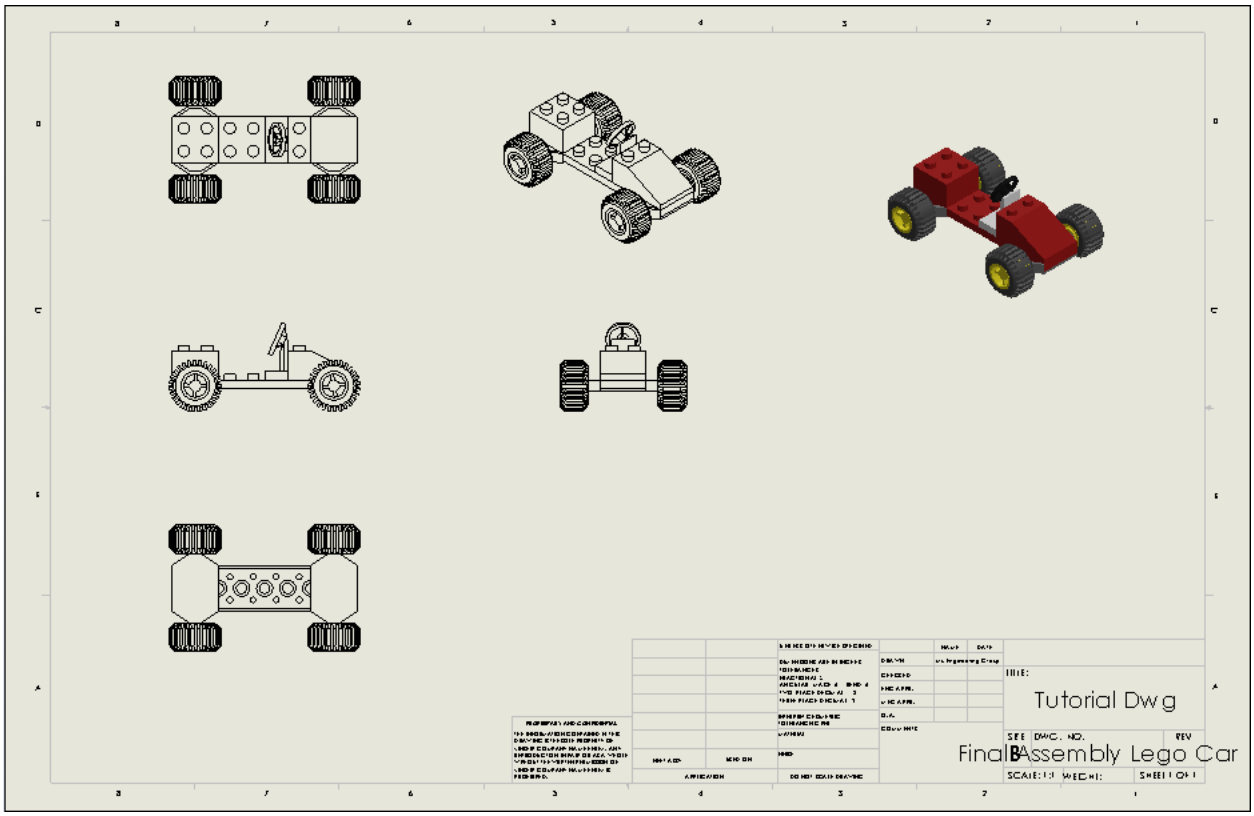
Tutorial Dwg
Final Assembly Lego Car