Batville Bridge

Syed Saahir Shahab Ahmed
Robert Johns
Nicholas Lazer
Eric Yen
Abdulla Zoghbor

EDSGN 100 Sec. 016

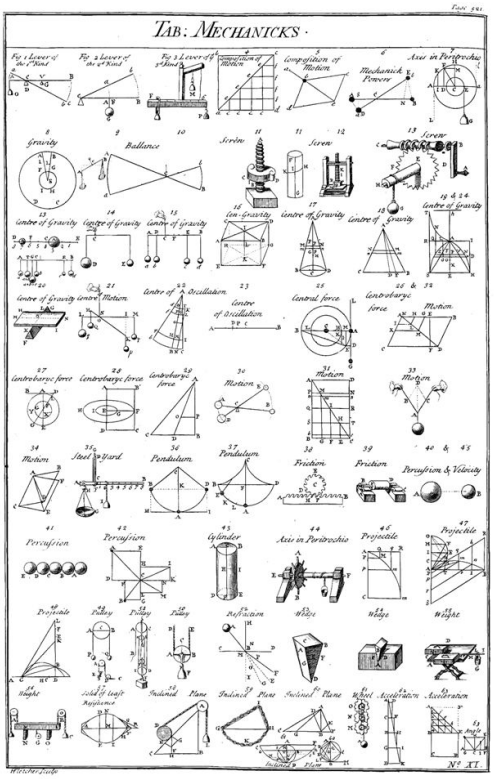

Abstract

Batville has experienced an outbreak of stemititis causing people to want to become engineers. A vaccine for the virus exists in Sneed but no structure connects these two places. The disease will reduce production of geophobia and thus people's income. Geophobia is the only source of Batville's income. The crop itself produces an illness known as buck-buck that causes just enough fatalities amongst the farmers to keep the currently working farmers dying while making enough room for full employment of graduates from college in Batville. Due to the addiction that geophobia causes, a decrease in geophobia produced and thus sold, would constitute an increase in severity of addiction and lead to criminal activity. This has lead to great social and economic disadvantages arising from addicts spending most money on geophobia and losing on money. For solving this issue, our group created a bridge which included all the simple machines and that could be used to transport the vaccine across the river to Batville.

We came up with many designs but finally decided on one which was built completing all the specifications and could reach across to Batville. Problems included the inability of the bridge to carry the vaccine in box, bridge dropping backwards due to friction of screw and bridge base bending. These problems made the project unsuccessful but provided valuable insight into improvements for the future.

Main Report

Existing Conditions and Current Situation:
Stemititis has infected Batville. This disease causes the infected to have an uncontrollable desire to do engineering.

Stakeholders:
People of Sneed - They posses the vaccine for the stemititis. They are the ones who usually save money and send their kids to college for engineering. This is where we are practicing engineering and a bridge needs to be built from Sneed to Batville to transport the vaccine.
People already infected with stemititis- They have a great desire to be an engineer and will do anything to become that regardless of other jobs even if they have no prior knowledge. The current situation for them is that even if they were farmers or were on their way to being a farmer, they now want to be an engineer which would in turn reduce employment of farmers.
Farmers of Batville- They are the producers of geophobia nettle yet in producing it they encounter an illness known as buck-buck which causes just enough fatalities amongst them to allow for full employment of graduates from college. However as the stemititis spreads, there are less farmers who would graduate and work in the farms and so less geophobia nettle produced as a result
Sellers of geophobia- they make a continuous profit as the people who buy nettle become addicted and are repeat customers. However they will only have profit as long as there is supply. This is also the main source of income for anybody who does not actually farm the crop. If the farming of the crop reduces, then there income also reduces and price of geophobia nettle will rise according to lower supply.
People who buy geophobia nettle- after consuming the nettle they become addicted to it and this leads them to continually spend money on this crop leading to loss of their wealth and criminal activities to gain more. This also leads to buck-buck which causes fatalities. Since supply of geophobia nettle would reduce if the number of farmers of geophobia reduce, the prices would increase and usually people who buy geophobia have low income. This would mean geophobia addicts would not be able to buy and due to their addiction, would resort to criminal activities to obtain geophobia. Therefore due to stemititis, criminal activities would increase and this would lead to economic and social disadvantages.
College students in Batville- college students in Batville have always been studying farming of nettle and due to full employment, have always been going into the farming business replacing the older farmers as they died from buck-buck. Due to the stemititis,

the college students would drop out from class even purposefully to become an engineer in college instead.
Bill Gates- He wishes to fund a project that will solve this problem and lead to the transportation of the vaccine from Sneed to Batville to control and potentially stop the spread of Stemititis.

Resources, and Assumptions:
Unlimited supply of Cardboard
1 board of foam core
Self Supplied amount of string
1 Brick
1 two gram ball
1 box carrying the vaccine
Unlimited supply of tape
Unlimited Supply of glue
Box cutters
Scissors
Rulers

Prototyping:
We employed the HOTAT approach when we prototyped because we would create one design then we would usually keep one piece like the hand crank, and our pulley system. We usually found positive outcomes from a certain piece and such that we kept that particular piece the same while we changed other pieces of the bridge around it. We also adapted our approach to the problem whenever we realized a piece was either too weak, redundant or not contributory to the whole product due to being unstable.

Assessment Criteria
We will be assessed on the ability to reset the fastest, the least amount of material used, and how effectively and safely we can get the egg across the gap.
The product has to include the simple machines which are the inclined plane, the wedge, screw, wheel and axle, pulley and fulcrum/lever. This bridge will also have to be able to start on the Sneed side and reach across to the Batville side of the river without actually having any support in the middle along the river. The product also needs to be able to start itself once a ball is dropped and will have to work by itself to deliver the vaccine across. Then it will have to simply reset by one interaction with it by one of our group members and the machine should then restart again and return the transporting component of the bridge to the Batville side. The bridge has to also include all of the simple machines. This includes a pulley, lever/fulcrum, wedge/inclined plane and screw.

Preferred Conditions

For the people of Sneed they would like to get the vaccine across the river because if they don't the college will close down and they will have no where to send their kids for an education.

For the farmers they might have mixed views on getting the vaccine across the river. Some might want the vaccine to get to Batville because if it doesn't there will be no one to grow the crops, but if the vaccine doesn't get there, there is less competition for the surviving farmers. Also the surviving farmers now will have more power over the market price and supply and control how much profit is made from geophobia.

For the sellers of geophobia, they also would have mixed feelings on the vaccine. If there are no farmers, they will have no nettle to sell, but there will also be less competition if everyone is turning into an engineer.

For the buyers of geophobia, they want the vaccine because they need the farmers to continue to grow the nettle for them to buy otherwise their addiction will cause widespread crime searching for the nettle.

For the college students they want the vaccine or the college will be forced to closed down.

For Bill Gates it is a neutral decision because he is not really affected by whether or not the vaccine gets across the river.

Methodology

Original ideas came from the idea of using an inclined plane as the movement from one side to the other. Originally, it was an incline up, level and then a slope downward to the other side. This idea evolved into many following ideas such that eventually it was a simple inclined plane stretching from one side to the other where the vaccine would simply have to roll on a cart to the other side and then with the use of crank and a pulley system, it could be brought back. We came across several problems when the weight of the bridge started to bow under the weight of all the duct tape and cardboard supports. We solved this problem by substituting our original bridge material for the lighter stronger foam core, and adding simple triangular supports that reinforced the frame of our bridge.

Data Analysis

Week	**Proposed Schedule**	**Final Schedule**
Week 1 (September 10)	initial prototyping	initial designs
Week 2 (September 17)	initial prototyping	rework designs
Week 3 (September 24)	test prototypes, collect and analyze data	begin building prototype (crank)
Week 4 (October 1)	final prototyping, draft report due	build prototype (slope)
Week 5 (October 8)	final prototyping	build prototype (assemble)
Week 6 (October 15)	Final test prototypes and collect data	Final test prototypes and collect data
Week 8 (October 27)	submit final report	submit final report

As you can see from the difference in the final schedule and the proposed schedule, our first two weeks took a lot of time designing and redesigning our product and involved a lot of discussion. This meant that we also had less time for prototyping and testing out our designs and thus it gave us less time to refine our final product and improve any last-minute mistakes and problems.

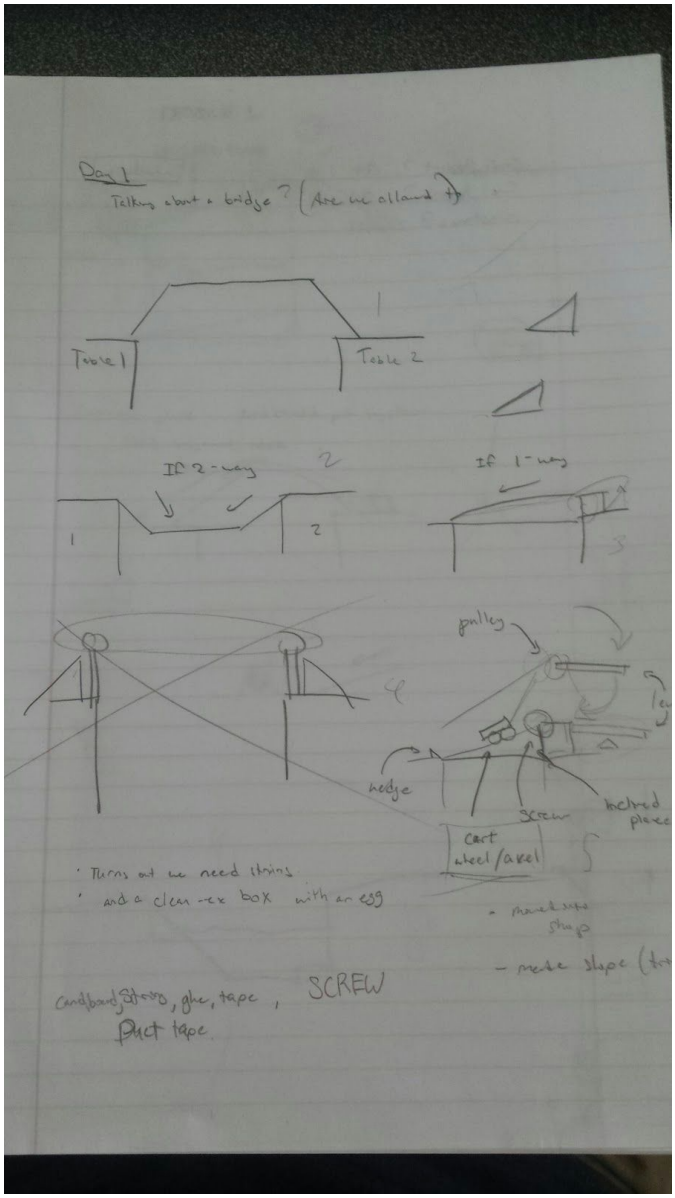

On Day 1 we were simply gathering any ideas we could come up with to get the egg across the gap. In our preliminary drawings, we were using the idea of a bridge, first as a trapezoid, then as an inverted trapezoid, and then an inclined plane and even a pulley cable car system. However all of these designs were illegal, because they began with something that went across the 5 ft gap.

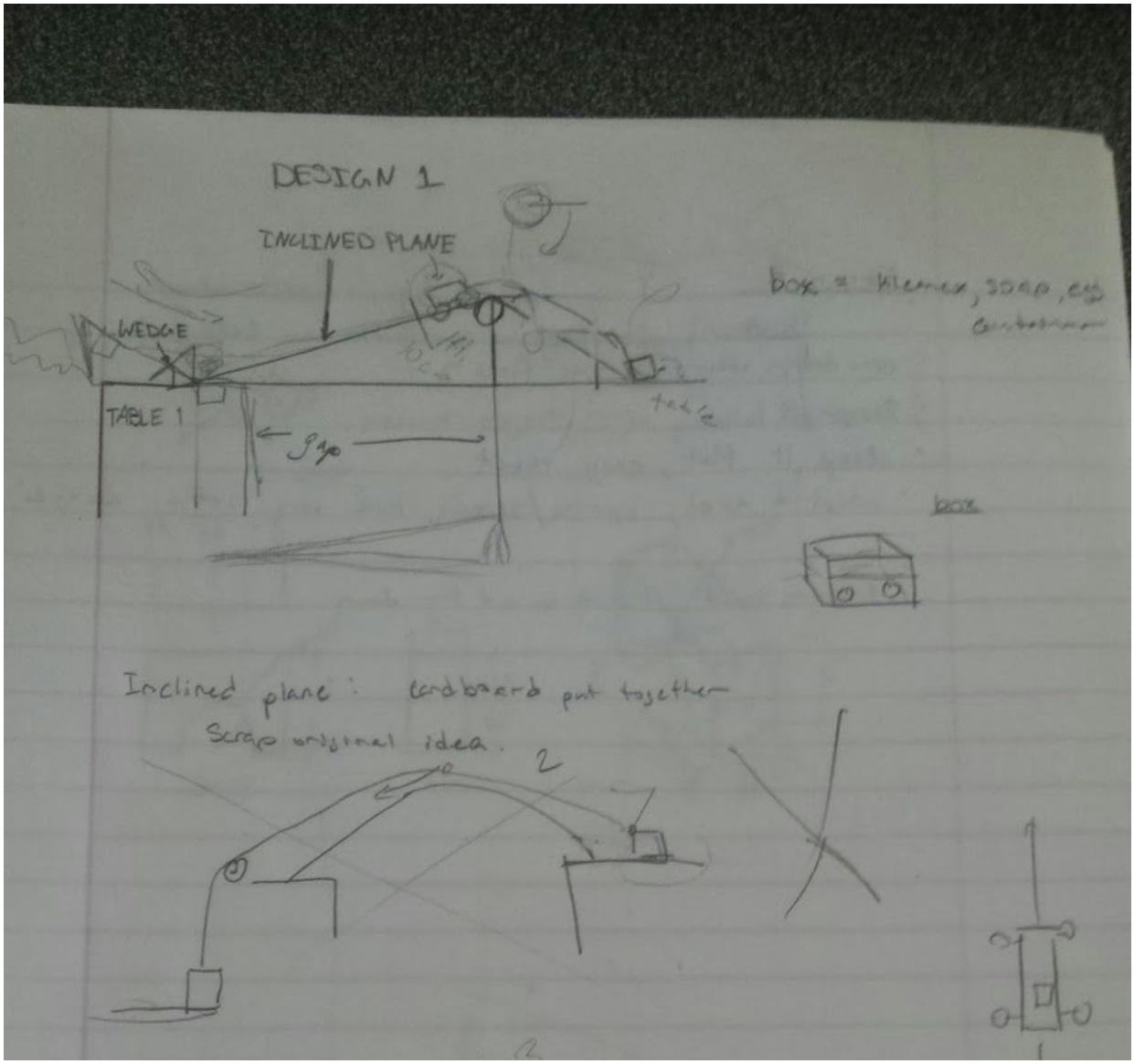

The first designs we produced were simple inclined planes that spanned the gap, and a pulley system attached to a counter weight that would pull the cart with the egg across the gap. When considering this we had to consider the amount of friction that would be create between the wheels and the inclined plane, and also would the pulley system be able to hold the weight of the brick falling and pulling the cart across the gap. This design however was not allowed because there was a piece that spanned the gap, and some items started on the opposite side of the gap.

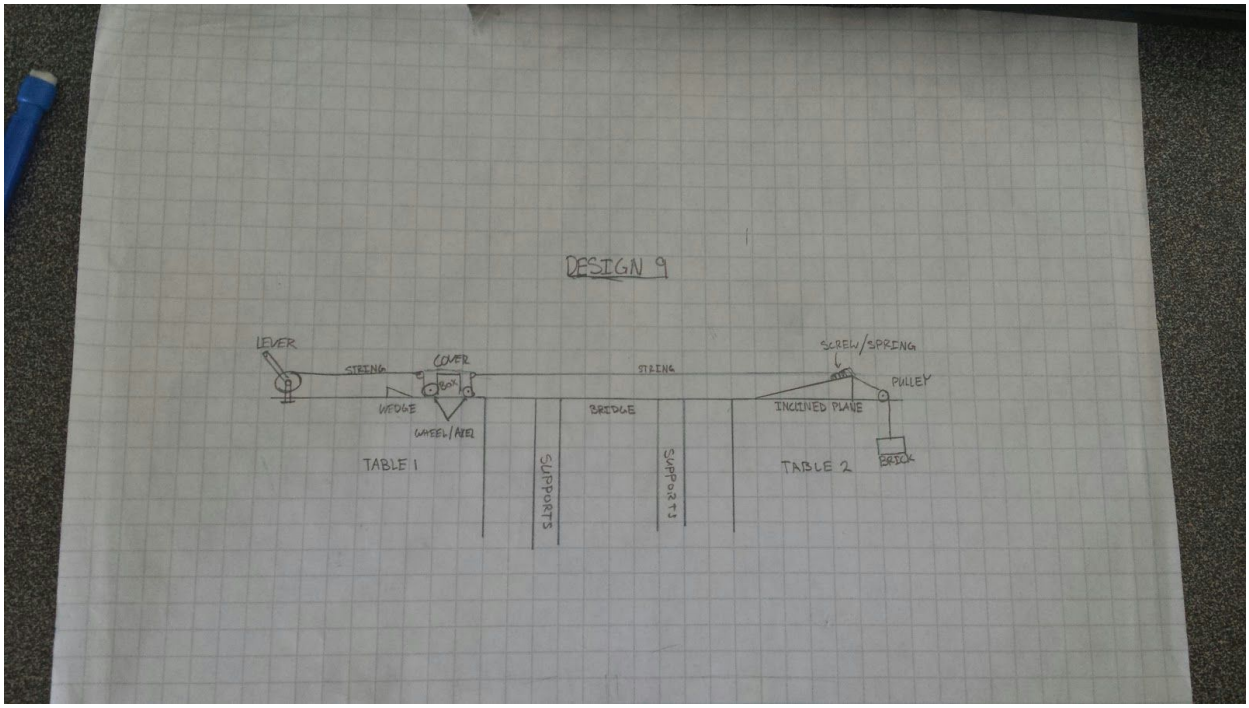

Our next idea was to have a piece that surrounded the box, but didn't touch it, and then we would have a pulley system that would hold a brick in the air. When we released the pulley the brick would fall, and the encasement would move along the bridge, and bring the vaccine with it as it crossed the gap. However we realized that we couldn't start something in the river or on the other side, so came up with another idea. The pieces of this design that we kept was a pulley holding the brick in the air until we released it.

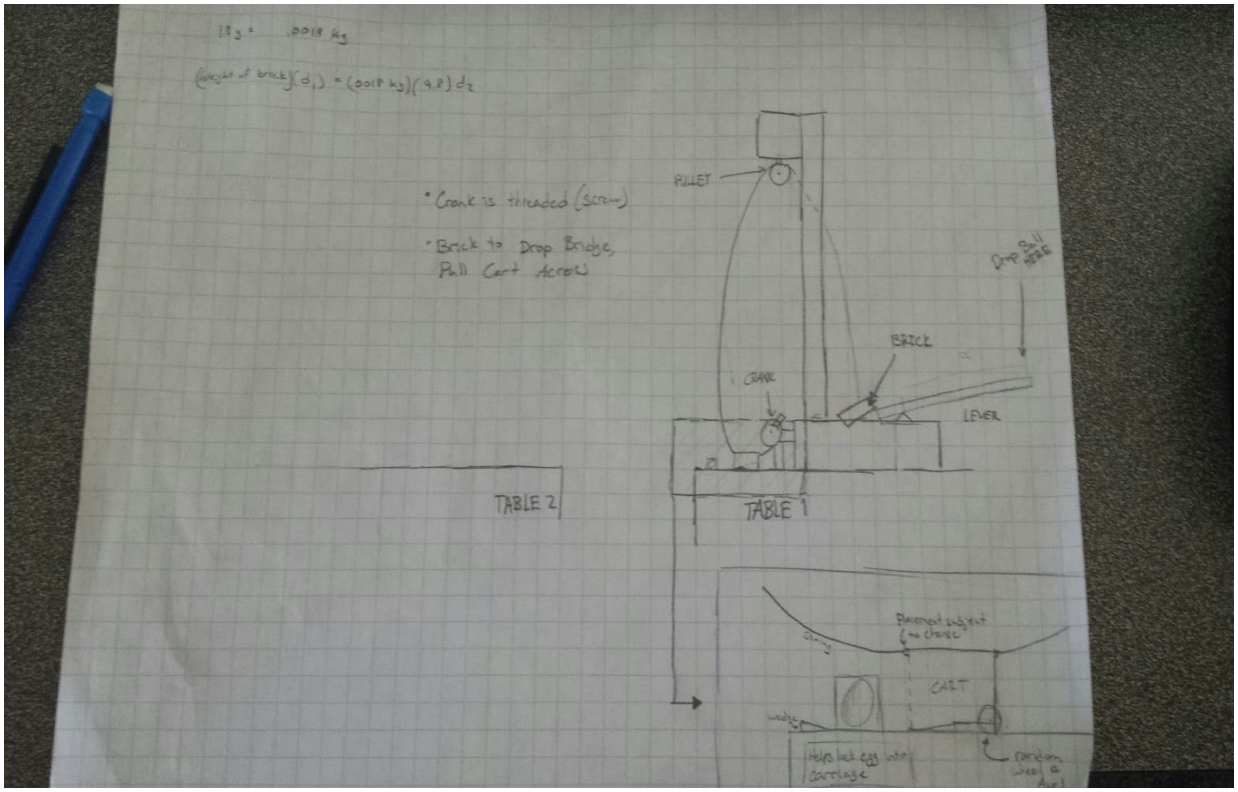

Then we arrived at the the idea to incorporate the usage of a dropping bridge where all components start on one side and the bridge falls to the other side. Also, we introduced the concept of the dropping of the ball as the catalyst of our system. We developed the lever to incorporate the force of the ball into our model.

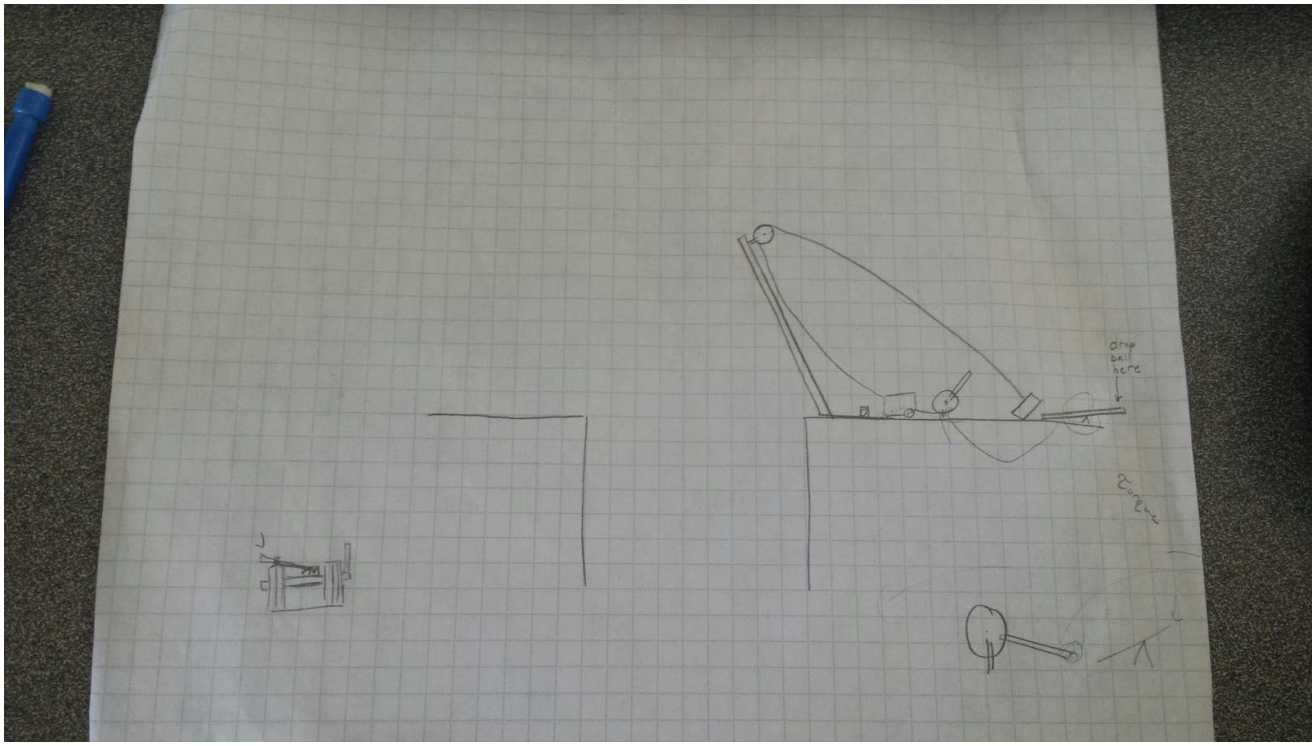

In this design we returned back to the idea of drawbridge, but refined it by placing a secondary pulley system on the other side of the platform that spanned the gap that would allow the string to be connected to a brick, and also a small cart that would hopefully pick up the vaccine as it was pulled across the gap. Our starting mechanism was a lever that would push the brick off the table, starting our mechanism.

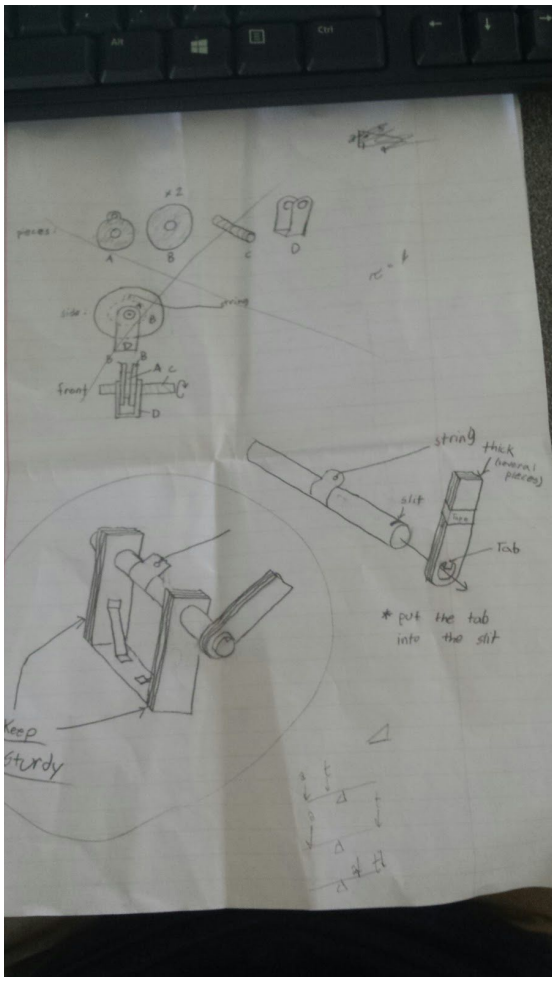
pieces:
x2
A
B
C
D
side:
string
front
string
thick (several pieces)
slit
Tab
* put the tab into the slit
Keep
Sturdy

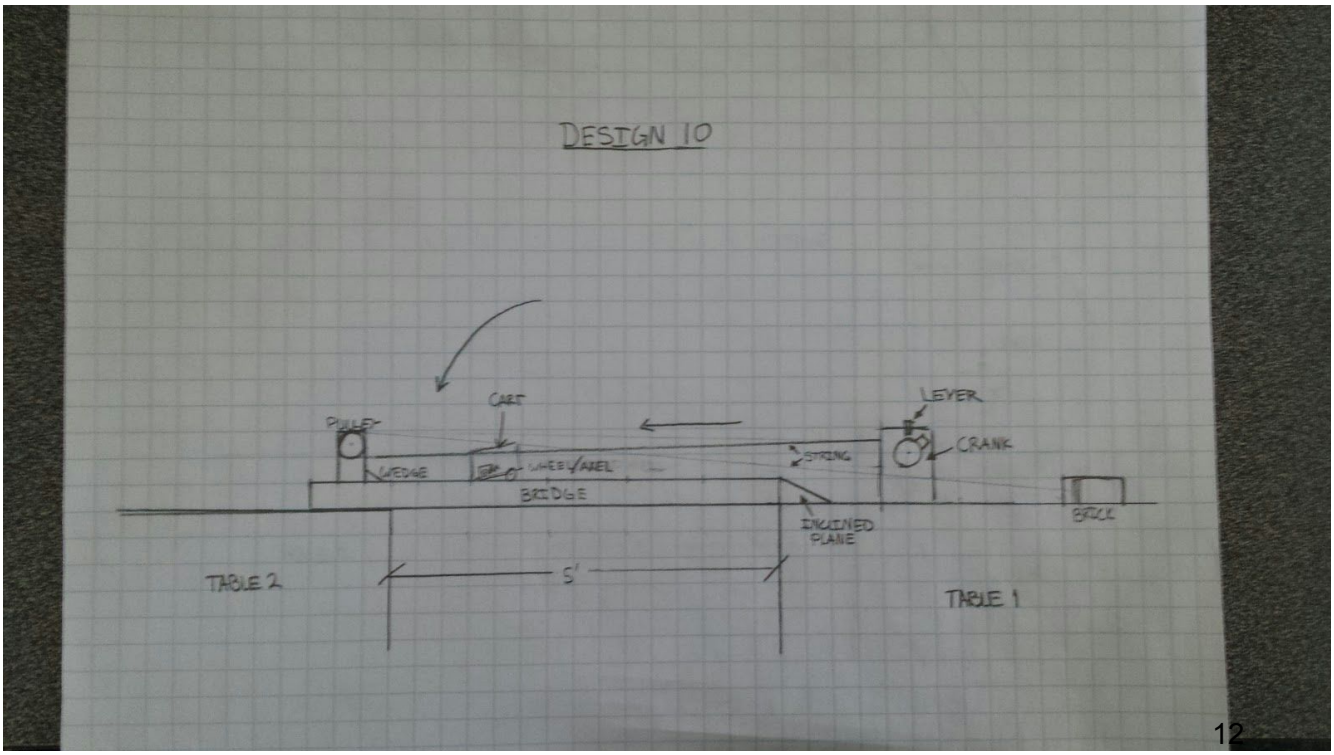
DESIGN 10
CART
PULLEY
WEDGE
WHEEL/AXEL
BRIDGE
SPRING
LEVER
CRANK
INCLINED PLANE
BRICK
TABLE 2
5'
TABLE 1

Our final design incorporated many parts from our past designs. It still incorporated our drawbridge type idea, and the two pulleys systems, but now the starting mechanism would drop the bridge, and the force of the bridge falling would cause a brick to drop off the table, and pull a cable that would pull the small cart across the bridge. The crank we had created was supposed to hold the bridge in place at first and then be used as a resetting mechanism.

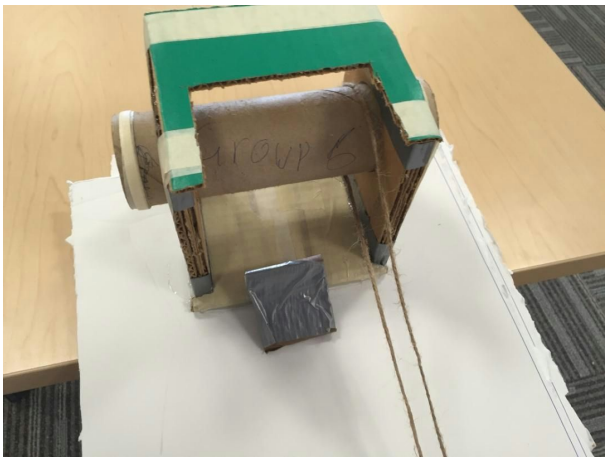

These pictures shown above are pictures of the actual final prototype.

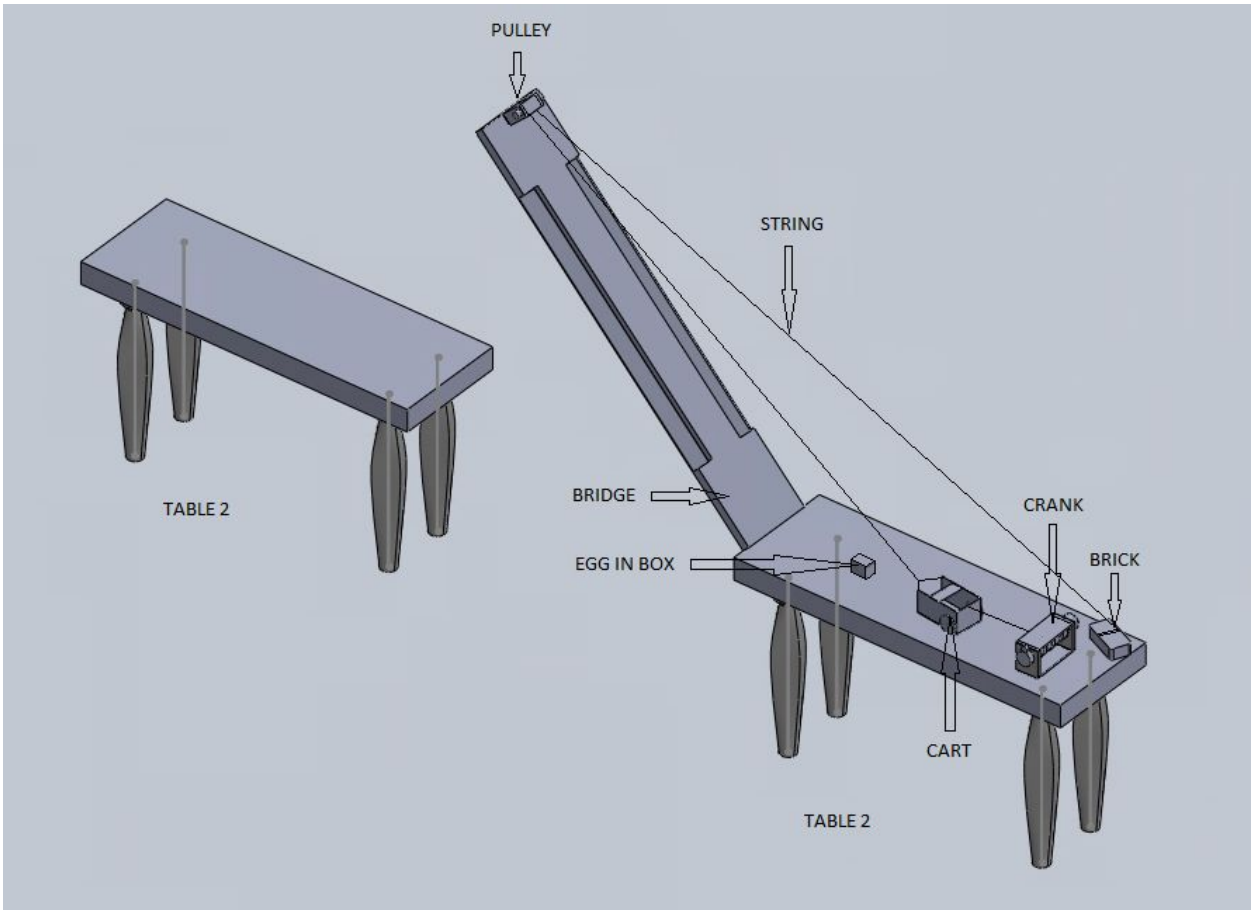

The above drawing is a model of what our group had planned for our project to look like prior to the failed attempts of trying to make it work. The starting mechanism was the dropping of a ball 1 foot above a lever arm on top of the crank that would release the crank from its stable state. This lever arm would release the crank so that it may move and spin as freely as it is able to given its restrictions. The weight of the Bridge would be the driving force in that as it fell, having been released by the release of the string on the crank by the lever arm, it would unwind the string coiled around the crank and also moving the cart forward. This cart being flush with Table 2 would theoretically scoop up the vaccine or in this case, an egg inside a box. The Brick was only supposed to be used as an anchor point so that the string would be anchored at one end forcing the other end to uncoil from the crank as the Bridge fell propelling the cart forward to move the vaccine across the bridge to the other side of the river in Batville or, as seen in the drawing, Table 1. Unfortunately, this did not work out as planned as we forgot to take into consideration the tension in the string lifting the cart off of the table prohibiting it from scooping the Box.

Top View of Model:

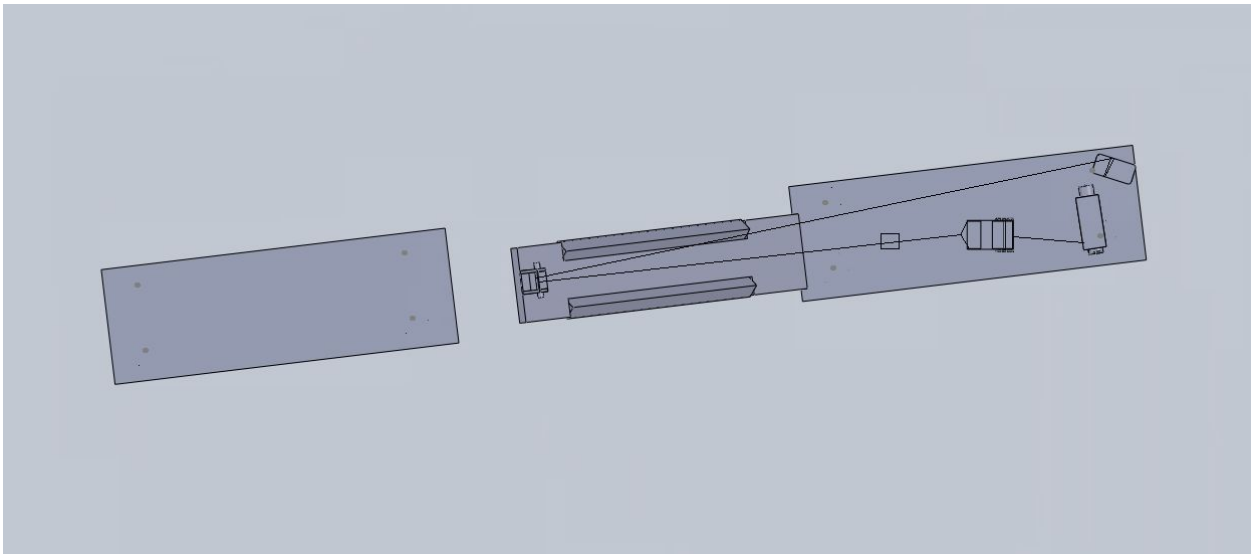

Front View of Model:

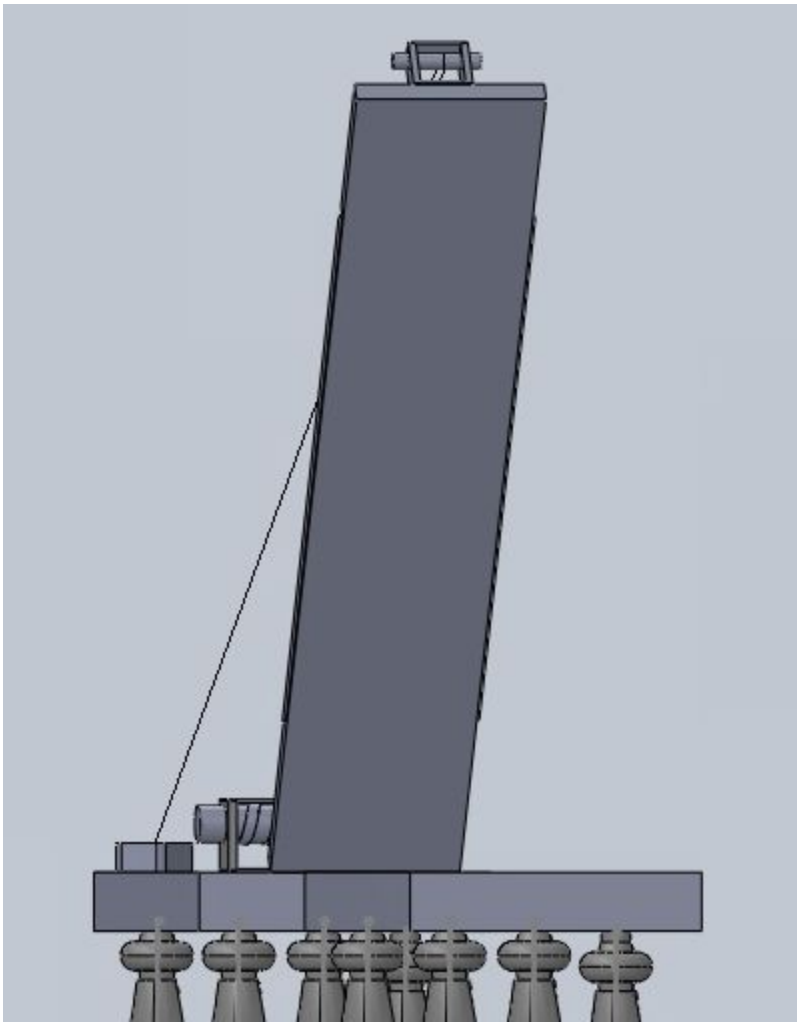

Conclusion

As a group, we were faced with the problem of getting the vaccine to the people of Batville across the river from Sneed that had an extremely large current requiring us to build a structure using only simple machines to transport the vaccine across the river. In order to resolve the problem we began to design a bridge system that would fall from Sneed to Batville and would use a pulley to pull the vaccine across the bridge. We decided to use the pulley system because we decided that it was the most effective way to pull the vaccine across the bridge. The falling of the bridge was triggered by a lever system that would use the force of the ball being dropped to lift the level and allow the string to unravel on our pulley. The sting was wound around a screw that kept it stationary until it was time for it to unwind. We attached wheels to the bottom of the cart to assist it in traveling across the bridge and to maximize the force of the pulley. Iso, we attached a wedge to the opposite side of the bridge to stop the cart once it reaches the other side. Once the bridge was dropped we used the force of the brick falling off the edge of a table to pull the cart, which scooped up the vaccine, across the bridge into Batville. Our attempt to solve this problem was unsuccessful but we believe that we provided a solid base to work off of and with some minor adjustments we could create a successful model. We were successful in dropping the bridge to the other side, setting up the pulley system, but after this we soon ran into trouble. The weight of the brick provided too much force which in turn pulled the bridge back towards Sneed, instead of pulling the string on the pulley. We believe that if we reinforced the pieces of our model, giving it more strength to withhold the force caused by the brick, it would have been an effective system. An improvement also to the pulley system that lands on the Batville side would have been to make the screw more smooth and thus allow the rope to more smoothly roll the screw and thus lowering the bridge on the Batville side. Some future research into more from here could be conducted in order to find some effective ways to support the pieces of our model while keeping the bridge light.