GE Project: No Grid Telecom Base Station Energy Storage System

State College Renewables Telecom Base

Sponsored by: GE Transportation

EDSGN 100, Section 004, Team 2. Submitted to: Prof. Liz Kisenwether

December 13, 2010

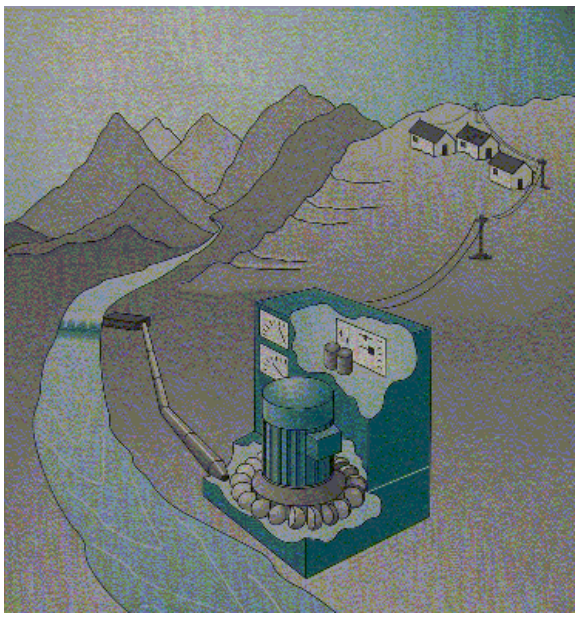

Abstract: The problem statement given to our team at the beginning of this project was to design a no grid telecom base station for a particular geographic region that would minimize use of a diesel powered generator, as well as run a cell tower to increase cell phone coverage. Our team designed a picohydro-solar base station which uses hydroelectric power from a major river in Costa Rica, combined with solar energy, to power the cell tower with zero dependence on any diesel generator. Waste energy was also minimized by installing a lighting system inside the station, as well as a temperature control unit to keep the equipment at a safe temperature. Our solution is relatively low cost and pays for itself versus diesel in approximately ## years.

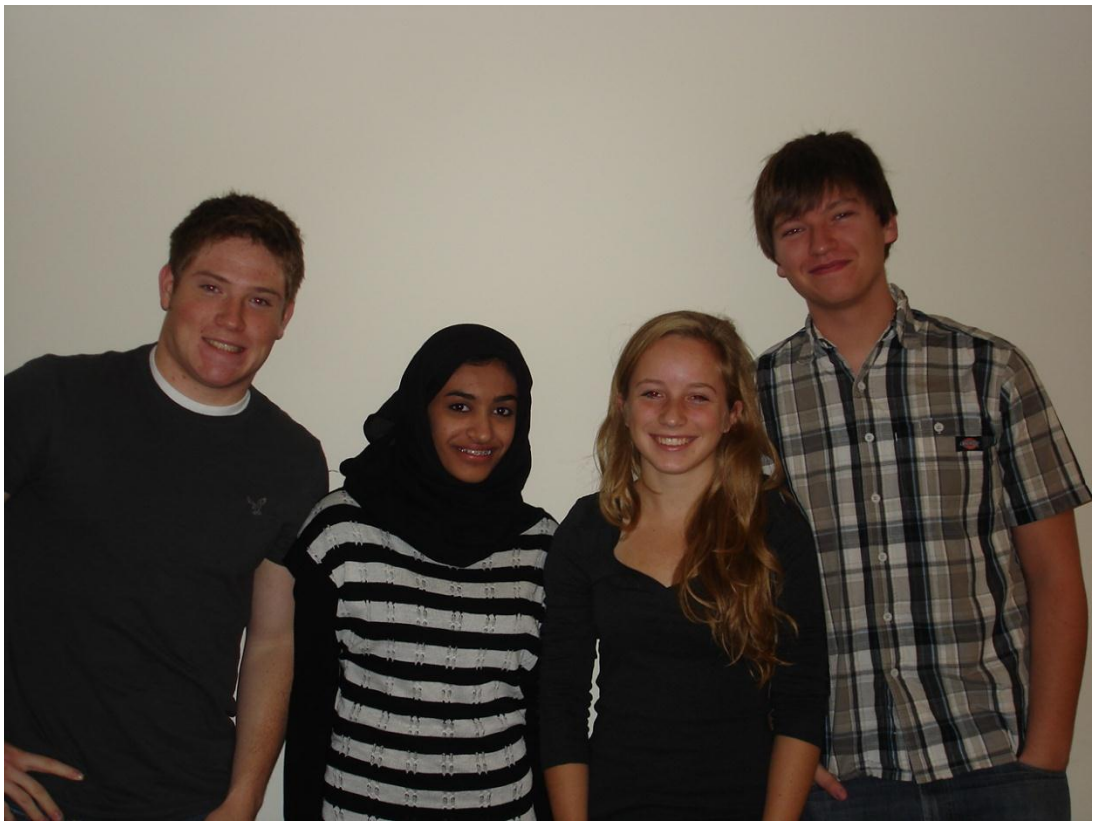

From left to right: Alex Smith (mailto:abs5216@psu.edu), Asmaa Alhaddabi (mailto:aka5101@psu.edu), Samantha Summers (mailto:srs5333@psu.edu), and Robert Hamill (mailto:rmh5137@psu.edu).

Note: GE provided a predominant portion of the materials for research and design of our system. These materials can be found at http://www.edp.psu.edu/design_projects/edsgn100/fa10/

Table of Contents

Project Description **3**
GE Project Locations, Decision-Making Process **4**
COTS Research, Cost Calculations **6**
CAD Drawings, Design Solutions **8**
Business Case, Money Savings of Design **9**
Lessons Learned **9**

Project Description:

GE Transportations gave our design team several objectives. The first was to design a telecom cell phone base station system that uses sustainable energy sources. These can include solar panels, geothermal energy, wind energy, etc. We were given the option to use a diesel generator system as well. Another objective was to incorporate the use of a GE sodium metal halide battery to optimize green power use within the station. Finally, the station needed to be able to optimize power in areas with little or no energy grid, and be feasible to construct within the country of use.

The general design of the power grid had to include several components. The first was renewable resources. This was the primary energy source of the system. A diesel generator and the battery also provided secondary power in case of a lack of renewable resources for an extended period of time. All of these energy sources had to be connected to a charge controller. The purpose of the charge controller was to control the level of energy being provided to the DC and other components of the station, as well as to direct excess power to charge the battery when necessary or to switch between energy sources if one ran low. From the charge controller, energy could run either to the DC components, which consisted of the cell tower, or to an AC/DC power converter, which, as its name implies, converts power from a direct current to an alternating current. From there, the AC loads would be powered, such as a temperature control unit and any lighting for the base station. The general guidelines are illustrated below:

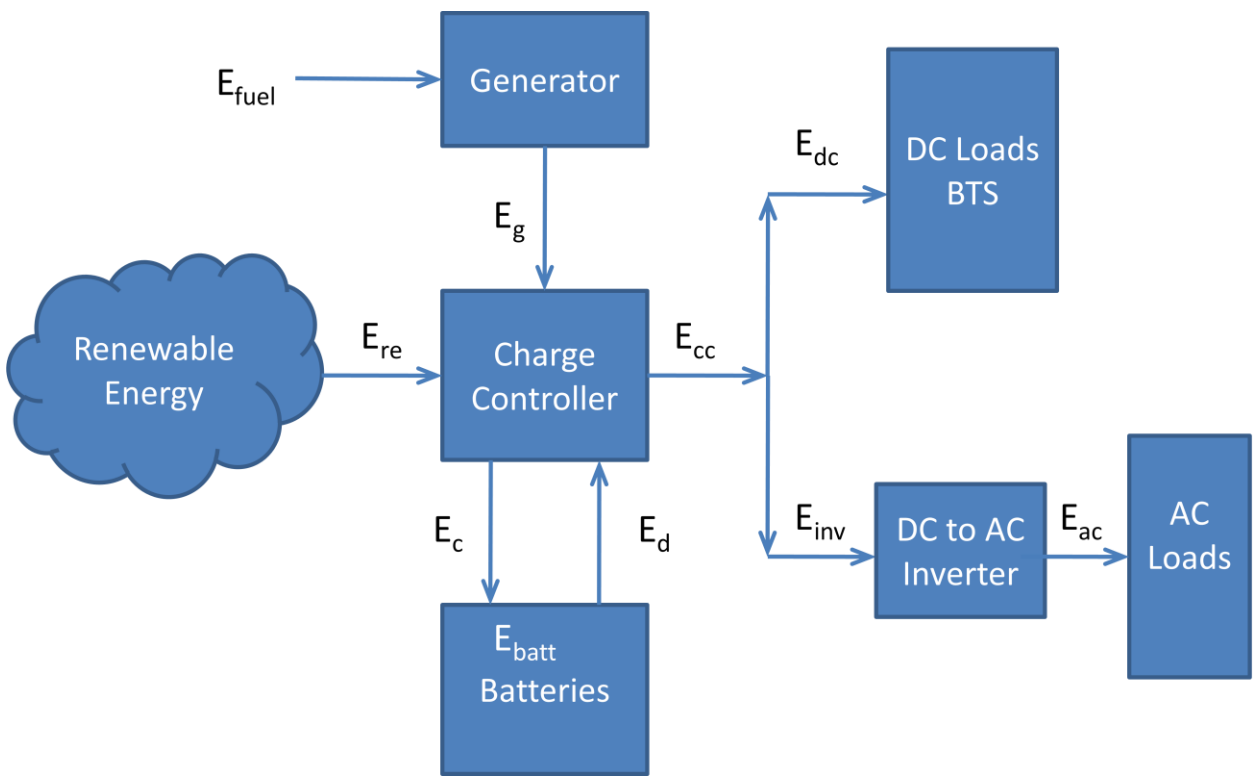

The system itself must also meet some electrical requirements. First, the cell tower alone requires a minimum of 1.2kW of power at all times to maintain operation, and therefore the energy sources chosen must provide a minimum of 1.2kW of constant power, not including any other components. The system must also run at -48V DC for the cell tower and other circuit components for maximum efficiency.

GE Project Locations, Decision Making Process:

Once given the objectives of the design, our team began researching areas of interest for our base station. Initial ideas surrounded around impoverished areas in Africa, India, and South America, where unreliable or completely absent power grids would be common. These broad regions were the first to be taken into consideration.

Of the three regions chosen, we then looked into the most reliable renewable resources which could be exploited in each area. Africa is known for having a large amount of sunlight, particularly close to the equator in regions such as Kenya and Tanzania. In India, the northern-most region of the country had the highest concentrations of sunlight for solar energy use. Finally, South America was most prominent for sunlight in the more Central American region, in countries such as Guatemala, Costa Rica, and Panama. Solar energy is a highly improved and relatively cheap renewable resource in today's economy, so our team felt it was best to use solar power as one of our major renewable energy sources.

For the second renewable energy source, our team wanted to use a source which was reliable for long periods of time, particularly a source which could function independently of the weather. Wind energy seemed like a good source, but it was unreliable, and areas with enough wind to generate a large amount of energy are scarce. The second idea was to use geothermal energy, however geothermal energy is expensive to tap into, and it is not available everywhere. In particular, geothermal energy was neither readily available nor economically feasible in the three regions chosen. Finally, our team considered hydroelectric energy. After doing some research, we found that hydroelectric energy is relatively inexpensive to install in smaller systems, and can be as high as 90% percent energy efficient. Also, rivers and tributaries which could be utilized for this particular form of energy are all over the world, and usually lie in scarcely populated areas of jungle or rainforest, where cell signals are most likely absent. Hydroelectric energy seemed an obvious choice.

The next task for our team was to find the best region for hydroelectric and solar power utilization. Africa is relatively void of rivers suitable for the base stations needs. A similar situation was seen in northern India. Rivers in these regions are much too large and slow-moving to be used for hydroelectric power, and many of these river sites are heavily relied on as economic subsistence for citizens, and the impact of the station may be more harm than

good. The team finally settled on Central America, which contained a plethora of river systems in areas which are not well developed. In particular, the Northern Highlands of Costa Rica contained several fast moving and isolated rivers. We also learned that Costa Rica runs on 99% renewable energy resources, the highest in the world, and plans to be 100% emission free within several years. Also, of the renewable energy sources used, 82% of the energy comes from hydroelectric power. The next highest energy source is solar energy. These facts implicated Costa Rica's Northern Highlands as the ideal spot for out base station. The river chosen was the San Carlos River due to its torrid and rapidly moving waters, along with its isolation from most power grids in Costa Rica, making cell phone signal in this area very unreliable.

Once the location was chosen, data from the SWERA website on Costa Rica for solar power was taken and plugged into a spreadsheet which calculated the energy output of various assemblies of wind and solar energy. This posed a problem, since the excel sheet did not encompass hydroelectric power. To compensate for this, our team found the flow rate and elevation of the San Carlos River and used this information to calculate how much energy could be produced with a 1 kW hydroelectric generator. A 1kW generator was used because all extra energy required (between 200W and 500W estimated) would be supplied by the solar panels. Any larger generator would create significant energy waste. The flow rate of the San Carlos River is approximately 1000g/min, which is significantly sufficient to supply a maximum energy output from a 1kW generator at all times. Once this was discovered, the wind information for the spread sheet was placed at a constant speed, enough to give a wind turbine of approximately 11.5 feet to produce a constant output of 1.0kWh. This represented the constant energy supply from out hydroelectric generator. The spreadsheet was then used to determine how many solar panels would be required to fill the energy gap from the hydro power. It was determined that three 1kW solar panels would be required to give sufficient energy for the system. Based on this data, our team was able to completely eliminate the need for a diesel generator. The hydroelectric power was so constant that we determined the diesel power could be removed from the system. Also, dump energy was minimized to only 931kWh per year, which was significantly lower than most other groups. The following figures give a graphical representation of our findings:

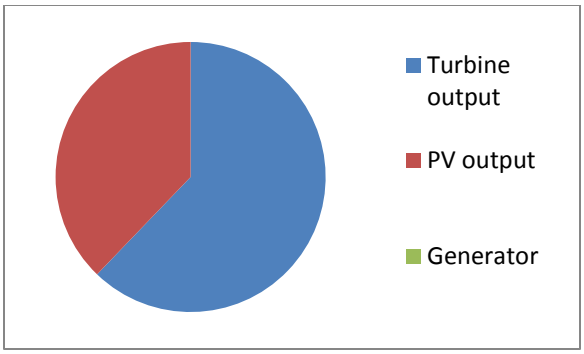

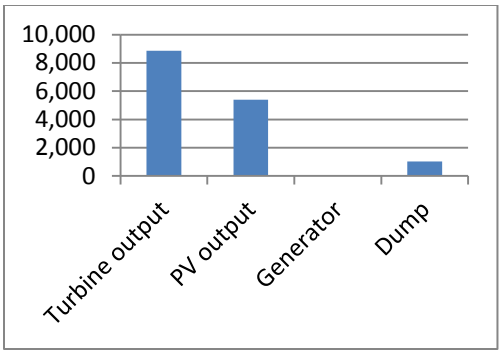

Turbine output	8,773	kwh
PV output	5,385	kwh
Generator output	0	kwh
Generator fuel	**0**	**gal**
Generator hours	**0**	**hr**
Dump energy	931	kwh

Table 1: This table shows the total yearly output from the hydroelectric generator (Turbine), the PV (photovoltaic) array, and the diesel generator, as well as the yearly dump energy. It can be seen that the diesel generator is never used at any point, and that dump energy is only 6.58% of the total annual energy output

These results determine that a 1kW hydroelectric generator and three 1kW solar panels will run our entire base station year round without any need for diesel energy sources.

The remaining energy dumped from the system will be used to light the hut, as well as to run a temperature control unit within the hut to make sure all of the electronic components of the system remain at safe temperatures.

COTS Research, Cost Calculations:

Now that the components needed to run the station have been determined, our team looked for cost-effective solutions to meet those requirements.

We researched various companies for the most cost-effective solutions to each component, and determined the following parts to be the most fiscally prudent:

COTS Components Research with Cost			
Product	Use	Quantity	Cost (Total)
Outback Power FLEXmax 80 MPPT Solar Charge Controller	Charge Controller	1	$636.00
Energy Systems and Design Hydroelectric Turbine Generator LH1000	Hydroelectric Generator	1	$3,295.00
Type 3 GE Durathon Battery	Battery	1	$4,100.00
Outback Power Systems FX-2524T DC to AC Inverter	Power Inverter	1	$1,798.00
Telecom Base Station Hut	Shelter and Contain Components	1	$1,000.00*
GEPV-200 solar panels (200W, 26.3 V max)	Solar Panels	15	$15,795.00^
Ecosmart 40 Watt Soft White Compact Fluorescent Spiral Bulb	Lighting	1	$10.77
Amcor APC2000E Air Conditioner	Temperature Control Unit	1	$500.00
Labor Costs	Construction of System	1	$7,200.00[+]
Total Cost			$34,334.77

*Base Station price used based on estimates from eight foot by five foot metal shed structure.

^1kW solar panels could not be found, so 15 200W solar panels arranged in series were used.

[+]Labor costs based on six workers earning $10 per hour for 120 hours of labor.

CAD Drawings, Design Solutions:

As seen previously in this report, our Solidworks hydroelectric generator design works by passing water over the turbines which generate a current. The schematics can be seen below:

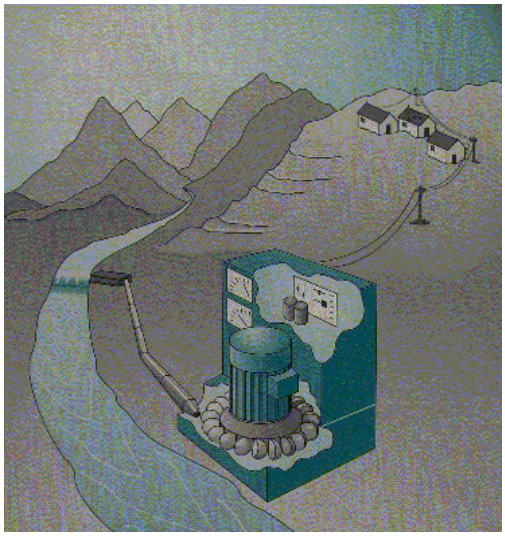

Table 2: This Solidworks representation of out generator demonstrates the turning of the turbines as water flows over them, powering the generator.

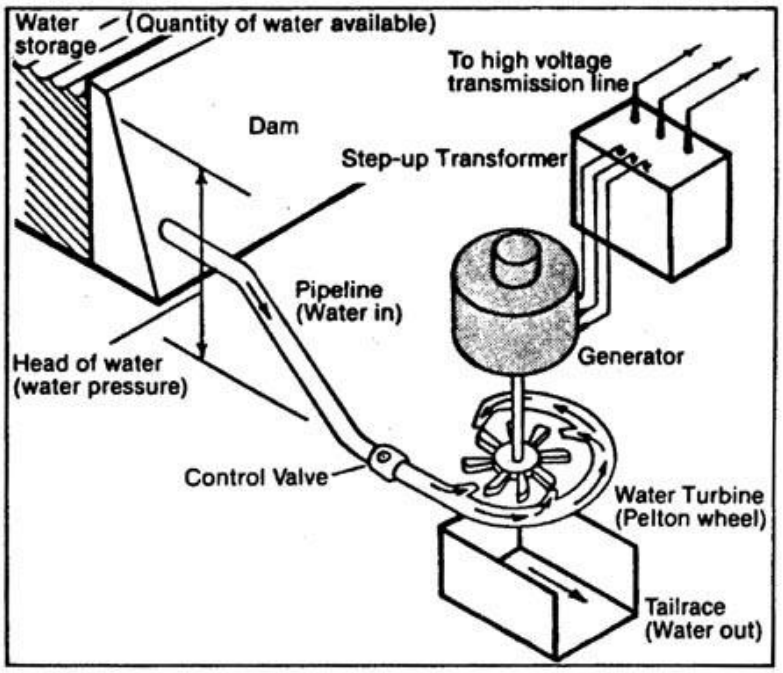

Table 3: This diagram shows how the hydroelectric generator functions. The generator our team is using will not require a damn, as this is a generalized design for all hydroelectric generators, however the basic concepts apply.

The basic design of our system is slightly modified from the general system provided because we have eliminated the need for a diesel generator (see below).

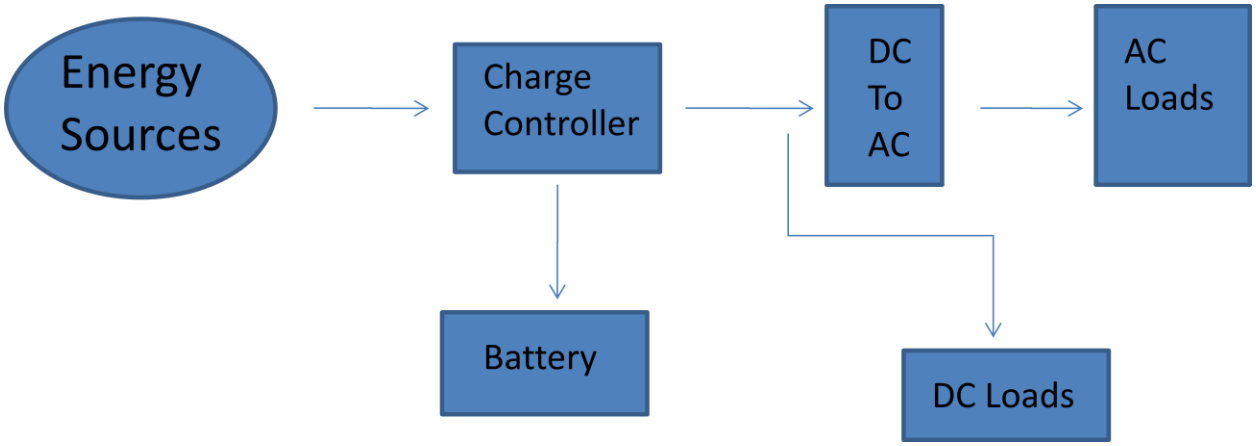

This design utilizes all resources to maximum efficiency, so as to eliminate any significant waste of energy.

Business Case, Money Savings of Design:

If the base station were to run solely on diesel fuel for an entire year, the estimated cost of the fuel would be 1138 gallons per year times 4.82 dollars per gallon. This gives a total of $5,485.16/year. This means that the current green energy base station would pay for itself in 34,334.77/5,485.16 = 6.26 years. This is a relatively short time for this base station to pay itself off in, and it releases zero carbon emissions or other pollutants, making it an ideal system for implementation.

Lessons Learned:

Overall, I think what we learned most out of this entire project is the importance of creativity in design. Almost all of the other teams in the class focused on solar and wind alternatives, and consequently had larger dump energies and a significantly larger cost due to the unreliability of the energy sources. Our team was able to utilize a source which is virtually constant throughout the year, ensuring quality cell tower operation at all times with minimal waste.

I also think teamwork became a lesson in this project. With such a complicated design model, it was essential for our team to separate into smaller groups to work on the different parts of the project and make sure all of the deadlines were met.

Conclusively, I feel that this project taught us all about the essential components of the engineering process and helped us gain experience through hands on work with a real problem, developing real solutions.