Siemens Sustainable Project

12 April 2013

Client: PSU and Siemens AG Corporation

EDSGN 100 Section 011

Group 8, Inc.
Sam Rocktashel
Mario Palarino
Kevin Hennessy
Amber Papenfuss

Summary

Penn State students' bathroom habits have lead to overuse of potable water on campus. More specifically, we plan on focusing our project in all East Hall bathrooms. We have identified the main source of such waste and that it is in the shower area. We have determined that the best method for reducing water consumption is through a device that will reduce shower times by restricting the flow rate of the water. Our goal is to cut costs for Penn State by making the water systems more sustainable – economically, socially, and environmentally. We recommend the implementation of these devices in all dormitory bathrooms.

Table of Contents:

Introduction 3
Concept of Operations 3
Design Principles 4
Schedule of Project 5
Concept Development 5
Detailed Concept Development 6
Conclusion 9
Lessons Learned 10
References 11
Appendix 1.....12
Survey Results Talley
Appendix 2.....13
Pairwise Comparison 1
Appendix 3.....15
Pairwise Comparison 2
Appendix 4.....16
Screening Matrix
Appendix 5.....18
Weighted Matrix
Appendix 6.....20
Gantt Chart

Introduction:

Siemens Corporation is a U.S. subsidiary of Siemens AG, a global powerhouse in electronics and electrical engineering, operating in the industry, energy, healthcare, and infrastructure & cities sectors. For more than 165 years, Siemens has built a reputation for leading-edge innovation and the quality of its products, services and solutions. Just recently, Siemens agreed to work with Penn State to develop a more sustainable campus.

Penn State's campus, being a small city, uses elements and systems that an ordinary city uses. Using technology, our goal is to research and develop a system that will ultimately help lead to a more sustainable campus. This system can be a new design or a previous element but ideally will be implemented with a low financial cost, environmental change, and improve the quality of life.

To combat the issues regarding the sustainability of the Penn State campus we decided to focus on water management. In order to increase the sustainability of the Penn State campus our product must have a low economical cost, have a small environmental impact, and must improve the quality of life while utilizing new technologies. We were able to identify that the dormitories are the main source of potable water consumption at Penn State. We plan to tackle this issue by improving the efficiency of the bathrooms in the dormitories.

Concept of Operations:

Our next step in our design process was to develop a concept of operations. We decided to focus our design around the students living in the East Hall dormitories. After experimentally determining the flow rates of the showers in East, West, North, South, and Pollock Halls, we found that East was the most wasteful with an average flow rate of 5 gallons per minute. We also determined that the average duration of a shower was roughly 15 minutes. This is a little on the long side, so we figured that it would make our system more sustainable if we could shorten the shower time in some way.

After examining the dorm bathrooms we could determine multiple methods that can improve the efficiency of the potable water usage in the dorms. Several methods our team developed involve the addition of high-efficiency automatic toilets and sinks. We also determined other methods to conserve water by using timers to restrict the amount of warm water used that would correlate to short shower times. After further research we were able to determine that a more effective means to reduce water consumption is through a device that restricts the water flow through showerheads. This device would attach directly to the showerhead and would utilize Siemens' solenoid valves along with flow rate sensors. After a predetermined time interval the flow rate of the shower would begin to decrease to a point where the flow rate is at a minimum, signifying that it is time to complete your shower. Through surveys we were able to determine that student's bathroom habits are wasteful (see appendix 1). By implementing the upgrades we stated above we would be able to curve student's bathroom habits and promote a more sustainable lifestyle.

Design Principles:

After examining the dorm bathrooms we could determine multiple methods that can improve the efficiency of the potable water usage in the dorms. To begin we conducted a field survey of the East Residence Halls where we utilized SurveyMonkey.com we asked the following questions 10 questions:

1. How long do you take to shower?
2. Do you turn the water off when you brush your teeth?
3. How many showers/toilets does your bathroom have?
4. Are your sinks/toilets automatic?
5. Do you use hot water washing your hands?
6. Do you use hot water when you take a shower?
7. Do you use cold water when you brush your teeth?
8. How many times a day do you use the sink?
9. How many showers do you take a week?
10. How many times do you use the bathroom a day?

We surveyed 250 individuals and found that all East Halls did not have automatic sinks/toilets. We also found that the average shower length was approximately 15 minutes long. And students typically take seven showers a week.

After consulting other sources provided by Siemens and through the Penn State Sustainability Initiative we were able to determine six major requirements for our design. Most importantly, the design must improve the sustainability of the the Penn State campus. Whether it be through environmental, social, or economical means. This means that Penn State's need for outside amenities must be reduced by at least 25% of its current consumption rate. Besides being sustainable the design needed to make money for Siemens, while utilizing technology that Siemens already possesses. The design should utilize at least one of Siemens products or technologies in its construction. Another crucial requirement for the design was the design's cost effectiveness. The design needed to pay for itself after five to ten years after its installation on campus. Penn State's future alliance with Siemens is another important principle that needed consideration. The design needed to be feasible enough that Siemens could consider the design for future applications and to continue to seek future design ideas from Penn State. Finally the design needed to appeal to different markets. The design needed to be adaptable and be easily installed in other college campuses across the world and other large housing complexes. These six requirements were determined by Group 8 Inc. to be the most important for its design.

Schedule of Project:

The design project took place over the course of six weeks. Once the design project was presented by Siemens the first goal was to determine a definition of sustainability and develop a problem statement. After the development of the problem statement approximately three weeks were dedicated to research, development of specifications, and brainstorming. Once several brainstorming ideas were generated, we spent one week narrowing down the brainstorming ideas until we developed a final design solution. There we spent the final two weeks conducting calculations and additional research to prepare for the final design presentation. From more details please see our Gantt Chart in appendix 6.

Concept Development:

In order to come up with the best possible solution to increase the sustainability of the Penn State campus, our team decided to continue on with the design process. Now that we had all our specifications in mind, we started our brainstorming phase. This step consisted of generating as many ideas as we could. These ideas ranged from automatic sinks, low flow toilets, servomotor controlled shower heads, solenoid valves controlled by flow rate sensors, etc. To help narrow these ideas down, we did extensive amounts of research on all those parts. Most of our information came directly from Siemens because we really tried hard to use as much of their technology as possible.

Through brainstorming we were able to identify six different ideas to improve the sustainability of Penn State. We derived the following ideas:

Maximum set water temperature: There would be a set water temperature for the bathroom and would not be able to be adjusted. This concept would be relatively easy to incorporate. However, this idea is not the most cost effective because the savings would be very small since all the bathroom appliances are already regulated in a similar manner.

Low flow rate toilets/sinks: The replacement of all toilets and sinks in the dormitories with high efficiency, low flow rate toilets and sinks. This concept is very sustainable and cost effective. However, we were worried about the longevity of a product like this. For example, the reason why the flow rates are above average in the toilets is to avoid blockages/back-ups. If they are too low, it may cause more costs/labor for the custodians and staff. Another reason why this isn't the best possible idea is because it doesn't really utilize any Siemens' cutting edge technology.

Automated sink: The sink faucets would be activated via a motion sensor to avoid sinks being left on. While this idea is probably the easiest and most logical way to save money and increase sustainability, it doesn't introduce any new technology. We would basically just be re-inventing something that doesn't need to be fixed and we don't feel that this is what Siemens is truly looking for.

Timer that gradually changes water temperature: A timer would be installed to

gradually decrease the water temperature to decrease shower lengths. This was our second best concept. It fulfilled all of our technical specifications; however, we were concerned about how sustainable this would be socially. We figured that people would be very upset over the fact that the hot water would just shut off over a period of time.

Raise the surrounding air temperature: Higher air temperatures would reduce the need for warmer showers and therefore use less energy. We found that this concept was ideal in theory, but we weren't sure if this plan would actually work. Our team found it very hard to find the connection between the air temperature and saving time in the shower. We tried to research the effects in similar systems like saunas, but we were not able to find any correlation that it actually reduced shower time.

Flow rate controller for shower: A device would gradually decrease the flow rate of the shower to shorten shower times. This is the best idea that we went with. It satisfied all of our specs in a very thorough manner. The details of this concept will be more thoroughly discussed in the detailed concept development section.

* To see the selection matrices please refer to appendices 1-5.

Detailed Concept Development:

The flow rate controlling device is composed of three major working components: an electronically fired solenoid valve, a flow rate sensor, and a programmable timing circuit. The flow rate controlling device will operate at 120V AC. This voltage was determined because the readily available access to wiring already available in the bathrooms. This eliminates the need for batteries, which would require frequent replacement by housing staff. We decided to have the flow rate controlling device mounted behind the shower and attach directly to the main line running to the showerhead. We made this decision to avoid the risk of electrocution while showering. As seen in figure 1 when the water is turned on the flow rate sensor will be activated and send signal to the programmable timer circuit. Here a "countdown will begin" for a predetermined time, in our circumstances we chose to have the time interval set to the average American shower length of eight minutes. After eight minutes have passed a signal will be sent to the electronically fired solenoid valve, which will close just enough to lower the water pressure indicating that eight minutes have passed. Once the shower is turned off the valve and timer circuit will reset and the water pressure will return to its original pressure.

Figure 1:

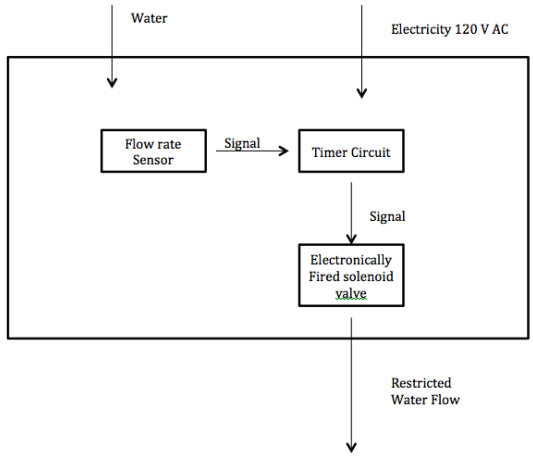

Figure 1: Above shows a systems diagram of the flow rate controller device.

In order for the flow rate controller to be a feasible design we chose a flow rate sensor manufactured by the company Ultisolar, model number USC-HS21TA. We chose this model because of its ability to detect a wide range of flow rates, ranging from 1-30 Liters per minute. This range fits well within the current flow rate of the showers in East Residence Halls of 5 gallons per minute. The flow rate sensor is also composed of copper allowing it to be both strong and flexible while also having a low environmental impact. Its operating working voltage of the flow rate sensor is 3 - 18V DC. This is a minor setback since the power supply will be 120V AC, however this problem will be easily fixed with the addition of a transformer and an inverter. Below figure 2 shows an image of the flow rate sensor.

Figure 2:

Figure 2: Above is an image of the Ultisolar USC-HS21TA flow rate sensor.

The solenoid vale we chose is the Yuyao No. 4 Instrument Factory's 2W-160-15N. We chose this valve because it is very comparable to solenoid valves manufactured by Siemens. The solenoid valve is powered by 110V AC and is easily installed with piping ranging from 1/8" to 2". The valve operates utilizing a 2/2 direct acting lift mechanism, which operates effectively under consistent water pressure. In figure 3 the lift mechanism can be easily seen in the section view. This allows for consistent decreases in water pressure when the solenoid valve is triggered. Below in figure 4 a image of the solenoid valve can be seen.

Figure 3:

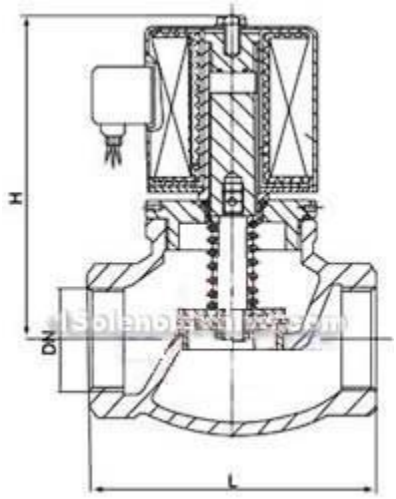

Figure 3: Above is a section view of the solenoid valve model number 2W-160-15N.

Figure 4

Figure 4: Above is an image of the solenoid valve model number 2W-160-15N used in our design.

For the timer circuit we were unable to identify a particular circuit to meet our required specifications due to our lack of knowledge of circuitry. We will discuss the requirements for this circuit and leave the design of the circuit for the electrical engineers of Siemens. The specifications are as follows:

- The circuit needs to handle 120V AC
- The circuit needs to be programmable and be able to able to be adjusted to specific time intervals and have the ability to reset

These specifications for the design of the timer circuit are fairly simple; however we lack the knowledge to design such a circuit.

Conclusion:

The main goal in this project was to find the most sustainable and efficient device for Siemens and Penn State. After running the brainstorming ideas with our specifications in our weighted matrix it was determined that the flow rate controller was the most efficient and sustainable.

The flow rate controller will use parts from Siemens, the overall cost of the flow rate controller will cost within the $100 - $200 range. This estimate was calculated through online prices. We found the solenoid valve to cost $32.50 - $22.75 depending on the size of order. The flow rate sensor cost approximately $13.75 per unit when purchased in orders exceeding 100 units. We then estimated a cost of the timer circuit to cost approximately $50 and an additional cost of $50 with other miscellaneous parts and installation.

We then calculated the savings making the following assumptions. Typically, the average shower is around 15 minutes and uses 75 gallons. With the flow rate controller, ideally, showers should run around eight minutes. This reduces the amount of water to only 40 gallons, saving 15

gallons for every shower. Currently, the estimated cost of water consumption in East Halls was calculated to be $811,051.92. Using the device, the cost of water consumption would be $432,561.02 and the overall savings would be $378,490.90.

Lesson Learned:

Over the course of this project the team learned many important lessons about engineering design and the design process including time management and how to sift through the internet in order to find important and pertinent information. The team needed to be efficient in working through the specifications and brainstorming in order to get to the research portion in a timely manner. the most important experience that the group gained is to not admonish unique ideas because outside the box thinking is integral when striving for innovation. The group also learned how to get along with people from all walks of life and how to effectively and efficiently communicate and organize a project.

References:

Alibaba. "2/2 Way 2W-160-15N Water Air Solenoid Valve 12v." *Www.alibaba.com*. Alibaba, n.d. Web. 26 Apr. 2013. <http://www.alibaba.com/product-gs/51672232/2_2_way_2W_160_15N.html>.

Duda Diesel LLC. "Two-Way Zero Pressure Solenoid Valves." *2-Way Zero Pressure Solenoid Valve [2W16015N]*. Duda Diesel LLC, n.d. Web. 26 Apr. 2013. <http://www.dudadiesel.com/choose_item.php?id=2W16015N>.

OMEGA Engineering. "OMEGA Engineering : Customer Service Center." *OMEGA Engineering : Customer Service Center*. OMEGA Engineering, n.d. Web. 26 Apr. 2013. <http://www.omega.com/techref/pdf/Solenoid_Valve_Select.pdf%20>.

The Pennsylvania State University. "THE PENN STATE SUSTAINABILITY STRATEGIC PLAN." *Green.psu.edu: Sustainability Plan- Please View the Plan!* The Pennsylvania State University, n.d. Web. 26 Apr. 2013. <http://www.green.psu.edu/SustPlan/plan.asp>.

The Pennsylvania State University. "Water System Planning--Estimating Water Use." *Water Resources (Penn State Extension)*. The Pennsylvania State University, n.d. Web. 26 Apr. 2013. <http://extension.psu.edu/natural-resources/water/converted-publications/water-system-planning-estimating-water-use>.

"Orifice, Nozzle and Venturi Flow Rate Meters." *Orifice, Nozzle and Venturi Flow Rate Meters*. Engineering Toolbox, 2000. Web. 26 Apr. 2013 <http://www.engineeringtoolbox.com/orifice-nozzle-venturi-d_590.html>

"Https://www.siemens.be/cmc/upload/cms/docs/sbt/hvac/Brochures_Datasheets_manuals/NL/09_Gaslek_CO_detectie/Datasheets/N7684.1_E5.._NL.pdf." *Www.Siemens.be*. INTELLIGAS, 17 Mar. 2003. Web. 26 Apr. 2013

Siemens. "Powermite 599 Series Glove Valve Actuators - Electronic & Pneumatic." *Flowrite 599 Series Globe Valve Bodies and Actuators*. Siemens, n.d. Web. 26 Apr. 2013. <http://w3.usa.siemens.com/buildingtechnologies/us/en/building-automation-and-energy-management/valves/zone-valve-and-valve-actuators/globe-valves-and-valve-actuators/electronic-and-pneumatic/Pages/electronic-and-pneumatic.aspx>.

Siemens. "Siemens Global Website." *Siemens Global Website*. Siemens, n.d. Web. 26 Apr. 2013. <http://www.siemens.com/entry/cc/en/>.

Appendices:

Appendix 1

Survey Results Tally

File Edit View Insert Format Data Tools Help All changes saved in Drive

	A	B	C	D	E	F	G	H	I
1	How long do you take a shower?	Do you turn the water off when you brush your teeth?	How many showers/sinks/toilets does your bathroom have?	Are your sinks/toilets automatic?	Do you use hot water washing hands?	Do you use hot water when you take a shower?	Do you use cold water when you brush your teeth?	How many times a day do you use the sink?	How many showers do you take a week?
2	22 min	yes	2,4,2	no	sometimes	yes	yes	4	14
3	10	yes	5,8,4	no	yes	yes	yes	4	7
4	15	yes	4,4,4	no	yes	yes	yes	3 to 4	7 to 8
5	15	yes	4,2,5	no	no	yes	yes	4 to 6	7 to 8
6	15	yes	4,8,4	no	yes		yes	8+	10
7	15	Yes	total of 8	no	sometimes	yes	yes	10	7
8	15	yes	allot (they live in a dorm)	no	yes	yes	yes	5	8
9	15-20	yes	6,6,6	no	sometimes	yes	yes	7	8 to 9
10	15	yes	6,6,6	no	yes	yes	yes	7	7
11	15	yes	6,6,6	no	yes	yes	yes	7	7
12	15	yes	5,6,6	no	yes	yes	yes	5	7
13	15	yes	2,2,1	no	yes	yes	yes	5	7
14	15	yes	10,8,14	no	yes	yes	yes	5	7
15	15	yes	1,1,1	no	yes	yes	yes	5	7
16	15-20	yes	4,8,6	no	yes	yes	yes	6	7
17	10 to 15	yes	3,6,3	no	yes	yes	yes	6	7
18	15	yes	4,8,5	no	yes	yes	yes	6	6
19	15 to 20	yes	4	no	no	yes	yes	12	6
20	10 to 15	yes	4	no	no	yes	yes	2	6
21	15	yes	3	no	no	yes	yes	7 to 8	2
22	15	yes	8	no	no	yes	yes	4 to 5	5 to 7
23	15	yes	2,2,1	no	no	yes	sometimes	3	7 to 14
24	15-20	no		no	sometimes	yes	sometimes	3	4 to 5
25	15	sometimes		no	sometimes	yes	sometimes	5 to 10	5 to 6
26									
27	Average: 15	Yes		No	Yes (majority) Sometimes average	Yes	Yes		

Appendix 1 displays the results of a survey conducted to determine the different bathroom preferences and habit of Penn State Students. *Shows only 10% of data due to size

Appendix 2

Pairwise Comparison

File Edit View Insert Format Data Tools Help Last edit was 6 hours ago

	A	B	C	D	E	F	G	H	I	J	K	L	M	N	O	P
1																
2		A	B	C	D	E	F	G	H	I	J	K	L	M	Row Total	Row Total/ Total
3	A	1.00	3.00	3.00	0.14	0.33	0.13	6.00	0.11	0.13	0.14	0.14	6.00	6.00	26.12	0.06
4	B	0.33	1.00	0.20	0.11	0.17	0.11	0.20	0.11	0.13	0.14	0.14	7.00	7.00	16.64	0.04
5	C	0.33	5.00	1.00	2.00	5.00	5.00	6.00	0.14	0.13	0.13	0.14	0.20	0.20	25.27	0.06
6	D	7.00	9.00	0.50	1.00	3.00	3.00	5.00	0.17	0.17	0.50	0.20	6.00	0.25	35.78	0.08
7	E	3.00	6.00	0.20	0.33	1.00	0.17	5.00	0.14	0.14	8.00	3.00	4.00	5.00	35.99	0.08
8	F	8.00	9.00	0.20	0.33	6.00	1.00	3.00	0.50	0.50	4.00	5.00	6.00	6.00	49.53	0.11
9	G	0.17	5.00	0.17	0.20	0.20	0.33	1.00	0.13	0.13	0.50	0.17	0.33	0.33	8.65	0.02
10	H	9.00	9.00	7.00	6.00	7.00	2.00	8.00	1.00	3.00	4.00	4.00	5.00	5.00	70.00	0.16
11	I	8.00	8.00	8.00	6.00	7.00	2.00	8.00	0.33	1.00	3.00	1.00	4.00	4.00	60.33	0.14
12	J	7.00	7.00	8.00	2.00	0.13	0.25	2.00	0.25	0.33	1.00	0.50	1.00	0.50	29.96	0.07
13	K	7.00	7.00	7.00	5.00	0.33	0.20	6.00	0.25	1.00	2.00	1.00	3.00	3.00	42.78	0.10
14	L	0.17	0.14	5.00	0.17	0.25	0.17	3.00	0.20	0.25	1.00	0.33	1.00	1.00	12.68	0.03
15	M	0.17	0.14	5.00	4.00	0.20	0.17	3.00	0.20	0.25	2.00	0.33	1.00	1.00	17.46	0.04
16														Total:	431.20	

The above pairwise comparison depicts the comparisons between the different specs created by Siemens, Penn State, and Penn State students. It was determined that the following specs were the most relevant to the project: J, K, H, F, G, E, and B. Below is a key identifying the specs above.

Key for Pairwise Comparison	
A	Hot showers
B	Want long showers
C	Use bathroom often
D	Automatic sinks
E	Engaging (behavioral change to promote sustainability)
F	Cost Effective/Saves Money
G	Educating
H	The design must improve the sustainability of the campus.
I	The design must make money for Siemens. Must be Cutting edge using new technologies that Siemens utilizes.
J	Design should appeal to the stated markets.
K	Design should make Siemens want to continue a strategic alliance with PSU.

L	Incorporate the developments that Siemens has used in their “Sustainable Cities” initiative.
M	The design should be applicable to cities to be able to be used in other projects. Have a long shelf life.

Appendix 3

Pairwise comparison 2

File Edit View Insert Format Data Tools Help Last edit was 5 hours ago

	A	B	C	D	E	F	G	H	I
1		A	B	C	D	E	F	Rowtotal	Rowtotal/total
2	A	1.00	7.00	3.00	4.00	3.00	9.00	27.00	0.40
3	B	0.14	1.00	2.00	1.00	4.00	3.00	11.14	0.17
4	C	0.33	0.50	1.00	0.25	2.00	3.00	7.08	0.11
5	D	0.25	1.00	4.00	1.00	5.00	0.33	11.58	0.17
6	E	0.33	0.25	0.50	0.20	1.00	0.33	2.62	0.04
7	F	0.11	0.33	0.33	3.00	3.00	1.00	7.78	0.12
8							TOTAL	67.20	

Appendix 3 shows the weights calculated using the narrowed down list of specs. The weights calculated here are then used in the weighted matrix (see appendix 5) to determine the best possible brainstorming idea. Below is a key identifying the specifications.

Key for Pairwise Comparison 2	
A	Design should appeal to the stated markets.
B	The design must make money for Siemens. Must be Cutting edge/ using new technologies that Siemens utilizes.
C	Cost Effective/Saves Money.
D	Design should make Siemens want to continue a strategic alliance with PSU.
E	Engaging (behavioral changes to promote sustainability).
F	Design should appeal to the stated markets.

Appendix 4

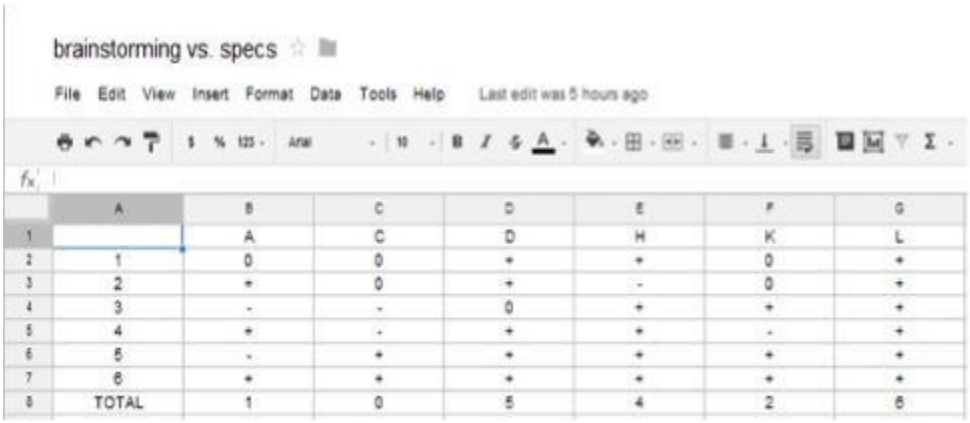

brainstorming vs. specs

File Edit View Insert Format Data Tools Help Last edit was 5 hours ago

	A	B	C	D	E	F	G
1		A	C	D	H	K	L
2	1	0	0	+	+	0	+
3	2	+	0	+	-	0	+
4	3	-	-	0	+	+	+
5	4	+	-	+	+	-	+
6	5	-	+	+	+	+	+
7	6	+	+	+	+	+	+
8	TOTAL	1	0	5	4	2	6

Appendix 4 is the screening matrix used to determine the better of the brain storming ideas by comparing them to the most important specs. Below is a key for the screening matrix.

Screening Matrix Key			
1	The design must improve the sustainability of the campus.	A	Maximum set water temperature
2	The design must make money for Siemens. Must be Cutting edge/ using new technologies that Siemens utilizes.	C	Low-flow rate toilets/sinks
3	Cost Effective/Saves Money.	D	Automatic sinks
4	Design should make Siemens want to continue a strategic alliance with PSU.	H	Timer that gradually decreases water temperature
5	Engaging (behavioral changes to promote sustainability).	K	Increase surrounding air temperature
6	Design should appeal to the stated markets.	L	Flow rate controller for shower

Appendix 5

Weighted Matrix

File Edit View Insert Format Data Tools Help All changes saved in Drive

	A	B	C	D	E	F	G	H
1		Weight						
2		(.40) A	(.17) B	(.11) C	(.17) D	(.04) E	(.12) F	
3	D	5	2	4	1	3	3	
4	H	4	2	3	2	3	3	
5	L	5	4	4	5	3	4	
6		Weight * Value						Rowtotal
7	D	2	0.34	0.44	0.17	0.12	0.36	3.43
8	H	1.6	0.34	0.33	0.34	0.12	0.36	3.09
9	L	2	0.68	0.44	0.85	0.12	0.48	4.57

Appendix 5 displays the weighted matrix that is used to determine the best idea to increase the sustainability of Penn State's campus. The compared specs for the weighted matrix was calculated Pairwise Comparison 2 (see appendix 3). The weights were also calculated through Pairwise Comparison 2.Through the weighted matrix it was determined that Idea 'L' was the best possible idea based on the given specs. As seen below the key is given for the weighted matrix.

Weighted Matrix Key			
D	Automatic sinks	A	Design should appeal to the stated markets.
H	Timer that gradually decreases water temperature	B	The design must make money for Siemens. Must be Cutting edge/ using new technologies that Siemens utilizes.
L	Flow rate controller for shower	C	Cost Effective/Saves Money.
		D	Design should make Siemens want to continue a strategic alliance with PSU.
		E	Engaging (behavioral changes to promote sustainability).
		F	Design should appeal to the stated markets.

Appendix 6

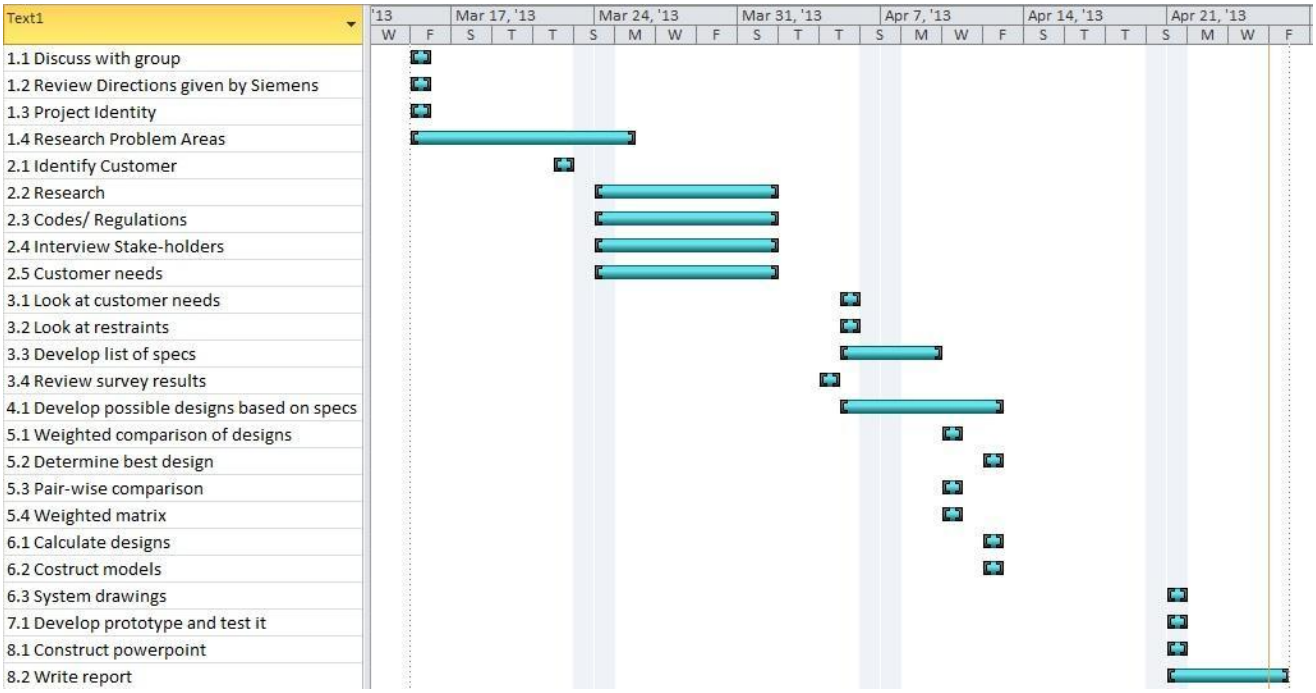

Appendix 6 displays the updated Gantt Chart showing the relative time frame for the sustainable campus project.