Designing a Foldable Shopping Cart

Engineering Design Principles 100

Section 009 Team 1

Submitted by: Seokwon Jung, Mark Richardella, Abdulla AlBalooshi, Anthony Ciavatta

Submitted to: Xinli Wu

Spring 2015

Abstract :

Personal folding carts has become a really popular item used to move items from one place to another with ease. What makes these carts appealing to customers is the ease of use, they are easy to store, and they can hold items weighing to about 100lbs. However, most of the carts in the market are not very efficient and reliable at carrying out what they are designed to do. Our mission was to design a cart that makes the process of transporting stuff much easier for its user by being light weight, durable, and easy to store. Our cart can be folded to more than half of its width, which makes it easy to store almost anywhere. Also, with the Aluminum piping and Tyvek fabric, are very durable and light in weight at the same time. We have also used swivel wheels and comfortable grip handles to make it easy to handle even when carrying 100lbs. We believe that our product is the future of folding carts as it is both innovative and high in quality.

Contact_Abdulla_AlBalooshi

Table of Contents:

1. Introduction (pg.4)
2. Description of the design task (pg.5)
   - Problem statement
   - Mission statement
   - Design specifications
3. Design approach (pg.6)
   - Project management (Gantt chart)
   - Customer needs assessment
   - Concept generation
   - Design selection matrices
4. The final design and its prototype (pg.9)
   - Working drawings
   - Prototype scale and a digital images of the prototype
   - Design features
   - Operation instructions
5. Engineering Analysis (pg.15)
   - Working mechanism
   - Cost analysis
6. Conclusion (pg.17)
7. References (pg.18)

Introduction.

The purpose of this project is to design and build a prototype of a foldable shopping cart for people who do not have cars or for those who need to carry their groceries for longer distance.

The design must serve its original purpose of a shopping cart and at the same time, it must be easy to use, easy to fold, and fold compactly for easy storage. The shopping cart must have a weight capacity of least 100 lbs, and its material cost should not exceed $50 unless it is justified.

The group worked on the project for about 8 to 9 weeks. Each members worked on the project by making problem, mission statement, Gantt chart, working drawing, prototype etc. The group focused storage, capacity, and its durability.

Contact_Seokwon_Jung

Description of the design task.

Problem Statement:

Design and build a prototype of a folding shopping cart for people without cars, or people that need to carry groceries longer than from garage.

Mission Statement:

Our mission is to design a cart that is better than the rest of the carts on the market, we plan on bringing a new design to the table that maximizes cost efficiency, ease of use, storage, capacity, and its durability.

Design Specifications:

The folding shopping cart should be easy to use (and assemble, if required).

The folding shopping cart should be ideal for transporting groceries and some other materials.

The folding shopping cart should fold compactly for easy storage.

The material cost for the folding shopping cart should not exceed $50 unless it can be justified.

The folding shopping cart should have a weight capacity of 100 lbs.

Design Approach.

Gantt chart:

Gantt Chart	W1:1/26	W2:2/2	W3:2/9	W4:2/16	W5:2/23	BREAK	W6:3/2	W7:3/16
Information gathering								
Brainstorming/ concept generation								
Concept selection								
Working drawing								
Prototyping and testing								

Customer Needs Assessment:

The design needed for this shopping cart must meet many qualifications to be an improved design that can make shopping easier. Some of the attributes a customer would look for is storage, weight, durability, handling, use, capacity, and cost. With all of these things in mind we had to come up with a design that from the start had to be able to hold at least 100 pounds and be under 50 dollars. Within these restrictions we then had to make the design lightweight, durable for bumpy streets and sidewalks, easily stored into small areas in a car or closet, however it must also have a good capacity for storing groceries. On top of all of these things it must have good handling and must be easy to collapse. To create the best possible design we had to take all of these factors into account when we created our designs. To do this we had to create a design

matrix which takes all of these attributes into account for each design and then compares each one.

Contact_Anthony_Ciavatta

Concept Generation:

We developed three designs to propose for an improved shopping cart that we would compare to the versacart, which would be the reference. Our first design was the cylinder spring which would have a cylindrical basket that collapses onto itself, our next design was the Flat Folding design which folds horizontally, the third design was the Collapsible pole design which would have the legs contract and would fold into a more condensed structure. The first design matrix(Fig. 1) showed us each designs ranking which goes as follows: 1. Flat Folding 2. Collapsible Pole (Tie) 2. Versacart (Tie) 4. Cylindrical spring. Each design was judged upon the attributes that we deemed most important to the customer in a genuine product. We also made a second design matrix(Fig. 2) which gives each attribute a weight of importance. We decided that the most important attribute was the shopping carts collapsibility followed by its cost. So these were major factors in why we ended up choosing the Flat Folding design as our prototype.

Contact_Anthony_Ciavatta

Design Selection Matrices:

(Fig. 1)

Design matrix		**(ref)Versacart**	**cylinder spring**	**flat folding**	**collapsible pole**
Storage		**0**	**1**	**1**	**-1**
handling		**0**	**0**	**0**	**0**
use		**0**	**-1**	**0**	**-1**
weight		**0**	**-1**	**-1**	**0**

capacity		**0**	**0**	**1**	**1**
cost		**0**	**-1**	**0**	**0**
durability		**0**	**0**	**1**	**1**
total		**0**	**-2**	**2**	**0**
rank		**2(tie)**	**4**	**1**	**2(tie)**

(Fig. 2)

Design matrix	**Rank**	**Weighting**	**(ref)Versacart**		**flat folding**		**collapsible pole**	
			rating	**weight**	**rating**	**weight**	**rating**	**weight**
Storage	**1**	**24%**	**1**	**0.24**	**2**	**0.48**	**0**	**0**
handling	**4**	**10%**	**1**	**0.1**	**1**	**0.1**	**1**	**0.1**
use	**3**	**14%**	**1**	**0.14**	**1**	**0.14**	**0**	**0**
weight	**3**	**14%**	**1**	**0.14**	**0**	**0**	**1**	**0.14**
capacity	**2**	**19%**	**1**	**0.19**	**2**	**0.38**	**2**	**0.38**
cost	**3**	**14%**	**1**	**0.14**	**1**	**0.14**	**1**	**0.14**
durability	**5**	**5%**	**1**	**0.05**	**2**	**0.1**	**2**	**0.1**
		100%						
total			**0**	**1**	**2**	**1.34**	**0**	**0.86**
rank				**2**		**1**		**3**
Continue?				**-**		**Develop**		**No**

The Final Design and its Prototype.

Working drawings:

Handle (all units are in centimeter)

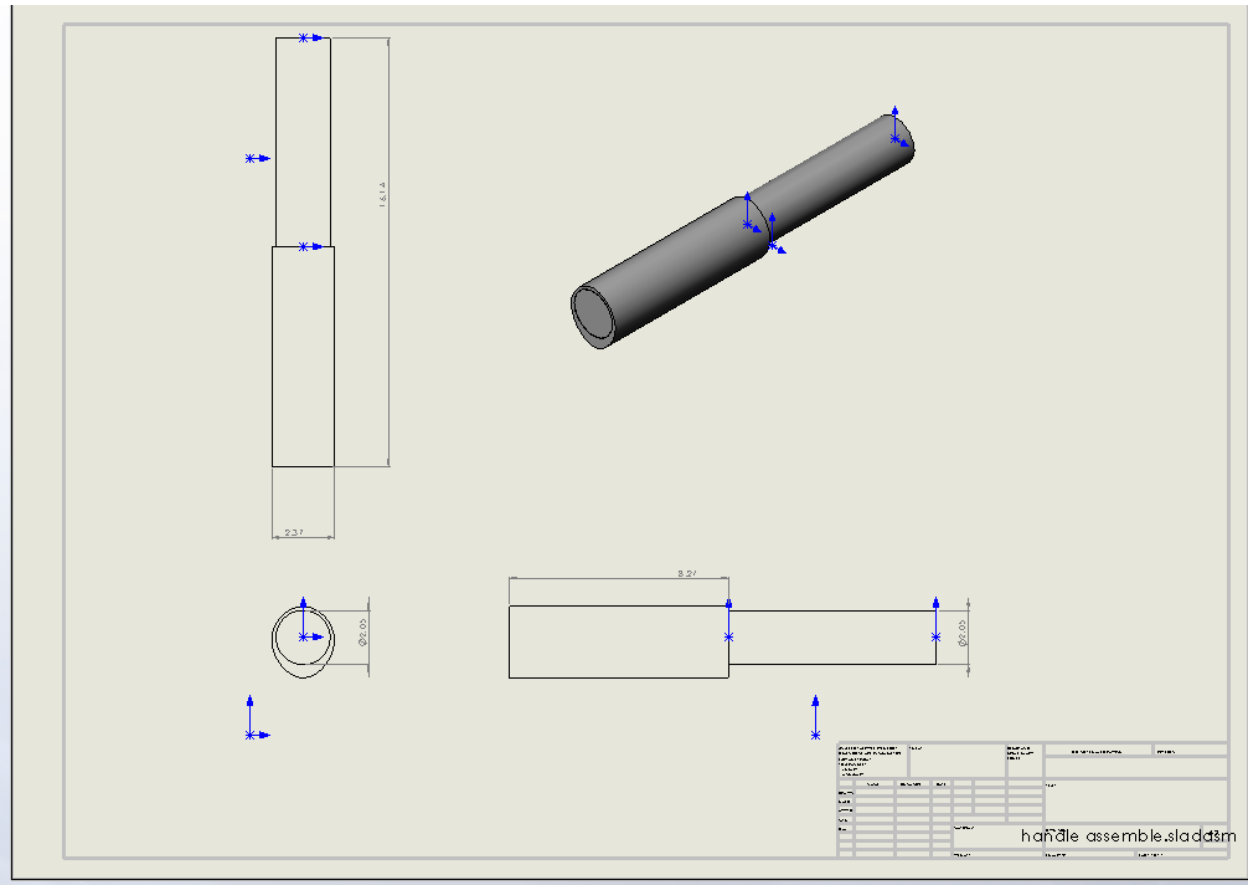

Contact_Seokwon_Jung

Wheel

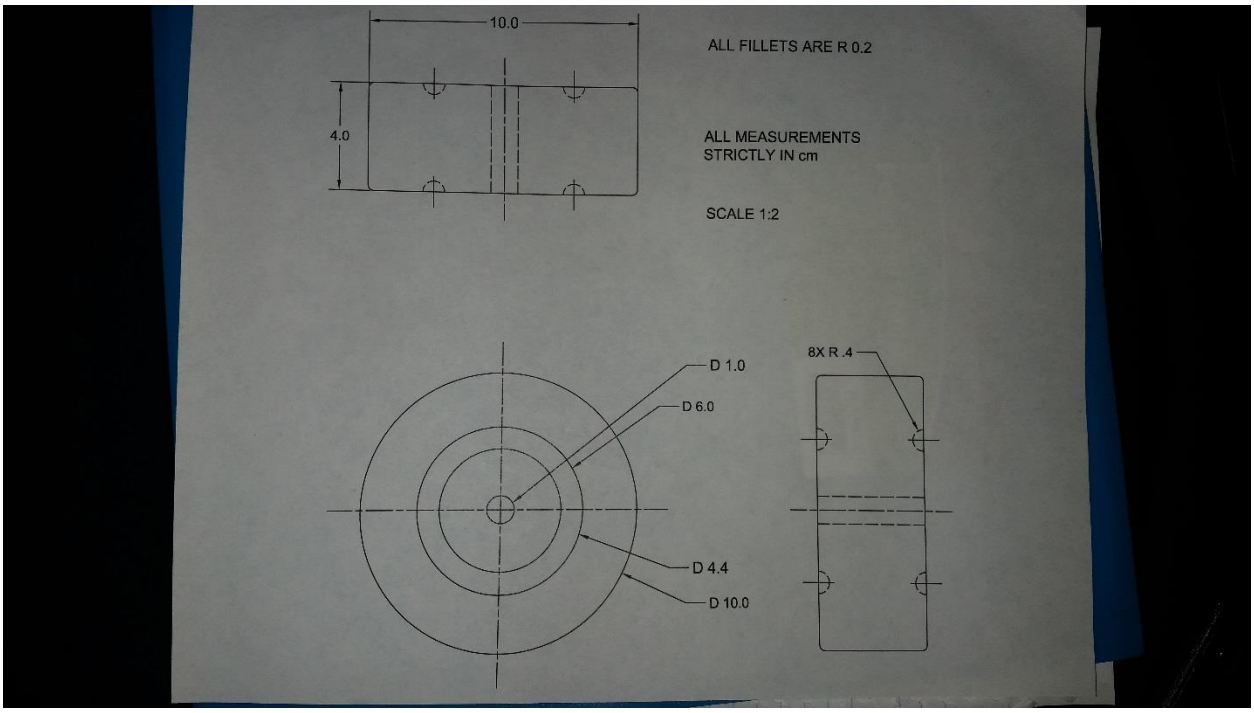

Contact_Mark_Richardella

L-shaped binding

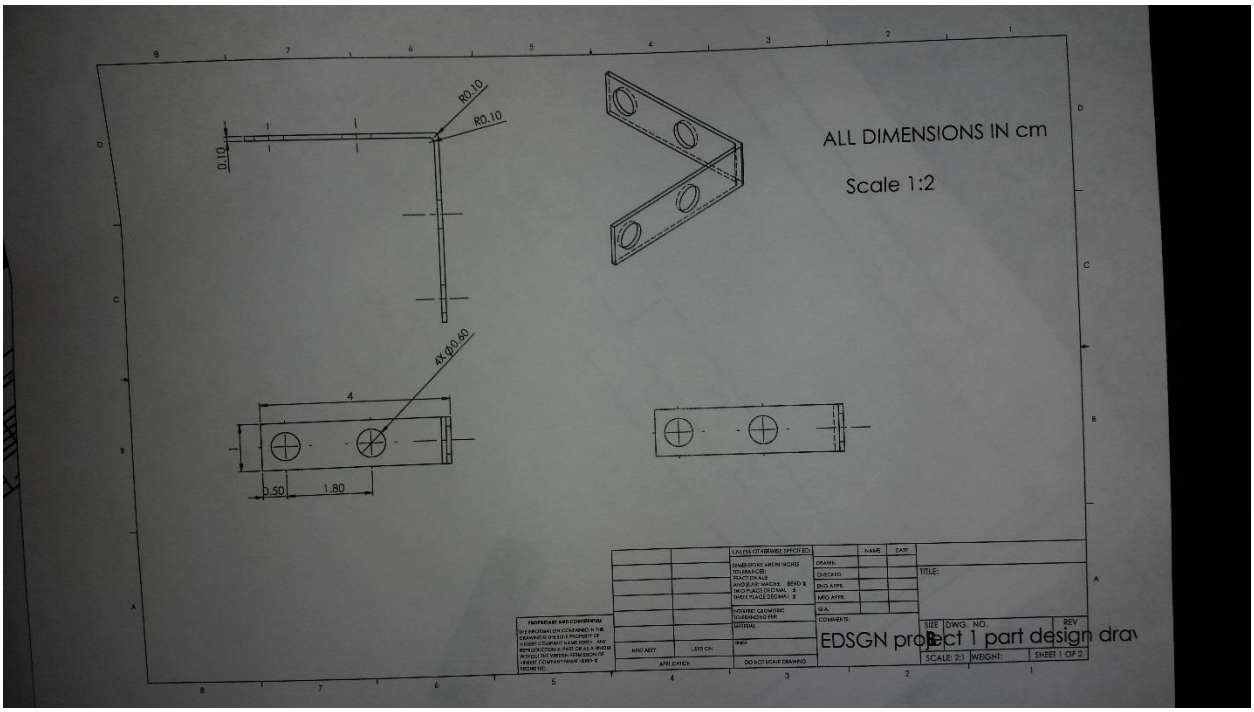

Contact_Anthony_Ciavatta

http://www.personal.psu.edu/sfj5042/edsgn100_sp15_section9_team1_dpl.pdf

Lock (all units are in inches)

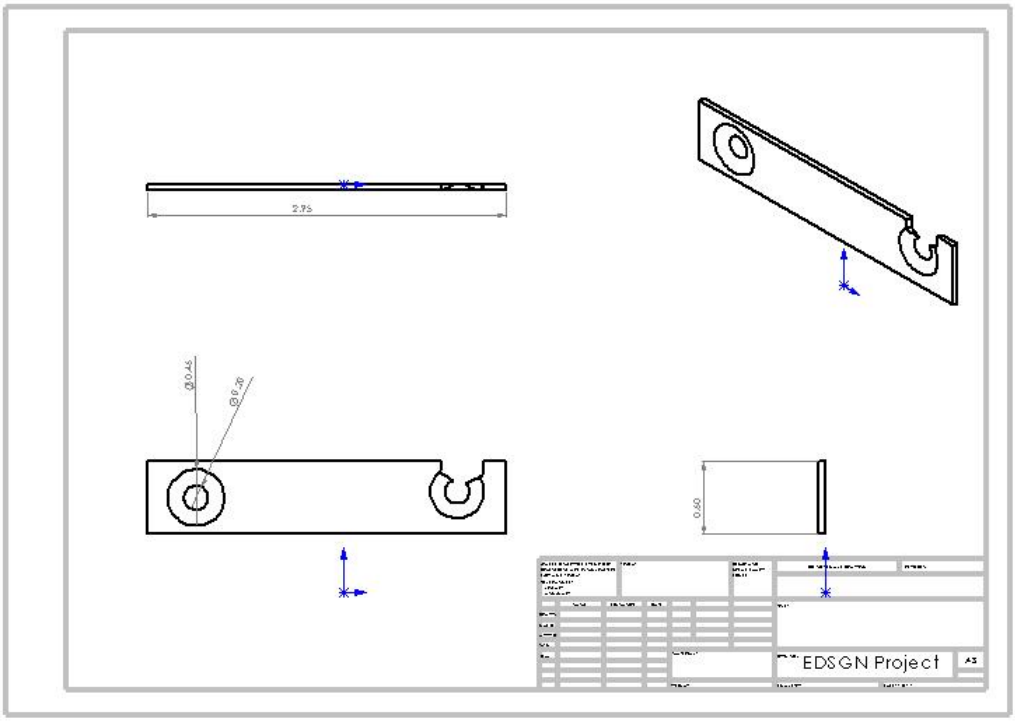

Contact_Abdulla_AlBalooshi

Prototype Scale:

1:2

Digital Pictures:

Design features:

Our design utilizes hinge technology to fold flat. With the use of fifteen hinges and 4 locks on the width of our design, the frame is able to fold flat, while keeping a very sturdy frame. We saw an obvious problem with other concepts, no bottom support for the groceries besides a bag. Our design features a fifth hinged support in the middle of the base of the structure allowing the bags to be supported alone, however we didn't stop there. For maximum support we added two horizontal

strips of composite wood to cover the entire base of the structure. Our design also features 4 wheels that all swivel to ensure maximum mobility. Our handles are placed at an angle that both allow comfort and for the cart to be easily lifted if need be. Our bag, although due to limited resources was not represented correctly, is made of Tyvek and will fit snugly into the frame. We chose Tyvek because it is light but very strong.

Contact_Mark_Richardella

Operation Instructions:

The design is fairly simple and almost is self-explanatory, but here are some instructions to operate it. Open up the cart. When opened completely lock the four hinges on the inside of the middle of each width of the frame. To collapse, unlock each hinge and make sure each foldable piece is slightly bent inward. Then simply fold it up for storage.

Contact_Mark_Richardella

Engineering Analysis.

Working mechanism:

Our design's functioning mechanism relies on the use of hinges. Hinges placed at the middle of each width allow the cart to collapse inward, while the hinges placed on the outsides of each width allow the middle pieces to collapse without the wood biting. These hinges work together to ensure that the cart folds properly and smoothly. The lock mechanism inhibits the hinges to flex to maximize stability during use. The locks are just latches that swing over and onto a screw stopping the hinges. The piece on the bottom frame folds upward similarly to the widths, allowing the support on the bottom to also fold.

Contact_Mark_Richardella

Cost Analysis:

Item	Quantity	Cost per piece	Cost per Cart
40-in Pipe	4	$0.50	$2.00
24-in Pipe	4	$0.26	$1.04
12-in Pipe	10	$0.15	$1.50
2-in Hinges	15	$0.15	$2.25
Handles	2	$1.50	$3.00

Wheels	4	$2.00	$8.00
24-in x 48-in Bottom Sheet	1	$2.30	$2.30
Tyvek Cloth 1-m^2	1	$1.00	$0.30
Manufacturing per cart	1	$5.00	$5.00
Other (nails, equipment, shipment, etc...)		$10.00	$10.00
			$35.39

The table above shows all the estimated prices of the items needed to manufacture one cart. The total price to manufacture one cart is $35.39; our selling price will be around $65 to produce a profit margin of 75%. Thus, our profit will be around $27/cart.

Contact_Abdulla_AlBalooshi

Conclusions:

We came up with several designs in the process to design the most durable, and easiest to store and use folding cart. We decided to go with a simple folding design to make it really easy for anyone to fold with ease. The material we used were Aluminum pipes and Tyvek fabric, which are both light weight and durable. We also used swivel wheels to make handling easy for the user. And one of our main goals was to make it easy to store, and we believe that we have achieved that goal as our cart can be folded to more than half its width. The design could have been progressed if there were side support in the design.

Contact_Seokwon_Jung

Reference:

Pipes: http://www.alibaba.com/product-detail/aluminum-tubes-pipes-ally-poles_60192300755.html

Hinges: http://www.alibaba.com/product-detail/window-hinge-stainless-steel-hinge-door_331856128.html

Handles: http://www.alibaba.com/product-detail/Rubber-hand-grip-or-rubber-handle_914125973.html

Wheels: http://www.alibaba.com/product-detail/black-or-grey-rubber-wheel-industrial_674587686.html

Bottom Sheet:http://www.alibaba.com/product-detail/furniture-grade-composite-plywood-fancy-plywood_986741724.html

Tyvek Fabric: http://www.alibaba.com/product-detail/Tyvek-PU-coating-fabric_273928151.html