Engineering Design 497K: CATIA

Sponsor: Boeing

Course Portfolio

Shane Andrew Szemanek

Abstract

The Engineering Design 497k Course focuses on CATIA and it Finite Element Package. Through the semester students are required to complete two course books. The first containing tutorials and exercises from simple sketching to advanced assemblies. The second book focuses on Finite Element Analysis, however one must be proficient enough in their advanced CAD skills as the parts being analyzed are complex in their assembly.

Additionally, each student is required to complete two design projects:

The Mini Design Project for Rapid Prototyping: Perfume Bottle

Task:

- **Design and Produce a prototype via rapid prototyping of an innovation perfume bottle**

Specifications:

- **The bottle is used for a volume of 100 mL (or ~ 3.4 FL OZ).**
- **The maximum size of the bottle should not be greater than 80 x 80 x 80 mm3;**
- **The minimum thickness of the perfume bottle should not be less than 2 mm to ensure a successful rapid prototyping.**

Final Design Project: Innovative Chair

Task:

- **Design a chair capable of holding a person of 300 lbs and then conduct a dinite element analysis to verify/prove the chair is safe under such a load.**

Design Specifications:

- **The chair should be able to withhold up to 300 lbs;**
- **The chair should be ergonomically sound;**
- **The chair should be durable;**
- **The chair should be comfortable;**
- **The chair should cost no more than $100 (Note: Use mcmaster.com for estimation);**
- **The chair should be safe.**

Table of Contents

CATIA V5 Workbook 4

Lesson 3 4

Lesson 4 4

Lesson 5 5

Lesson 6 7

Lesson 7 8

Lesson 8 9

Lesson 9 10

Lesson 10 11

Lesson 12 12

Lesson 13 13

Surface Modeling Tutorial 14

CATIA V5 Finite Element Tutorials 15

Lesson 2 15

Lesson 3 16

Lesson 5 17

Lesson 6 18

Lesson 7 19

Lesson 9 20

Lesson 11 21

Lesson 14 23

Lesson 16 24

Lesson 17 25

Mini Design Project 26

Final Design Project 28

FEA Report 43

CATIA V5 Workbook

Lesson 3

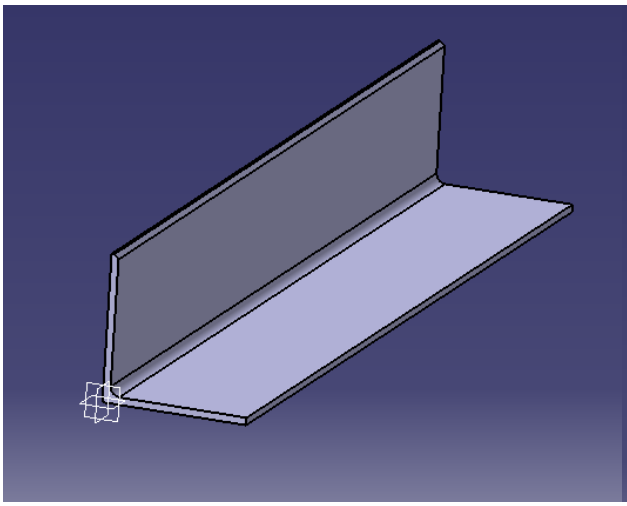

Tutorial: L-Shaped Extrusion

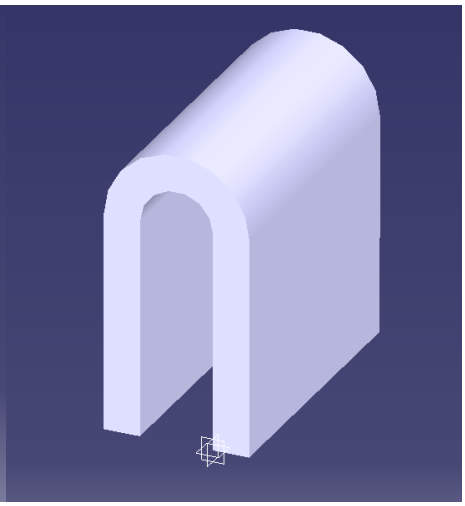

Exercise 3: U-Shaped Extrusion

Lesson 4

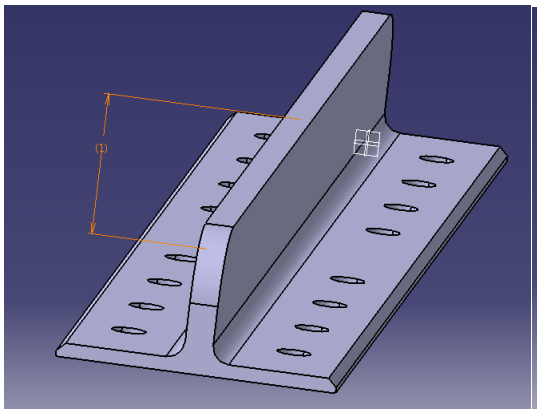

Lesson: T Shaped Extrusion

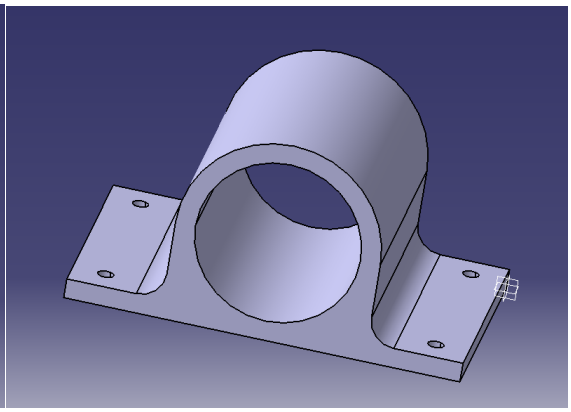

Exercise 3

Lesson 5

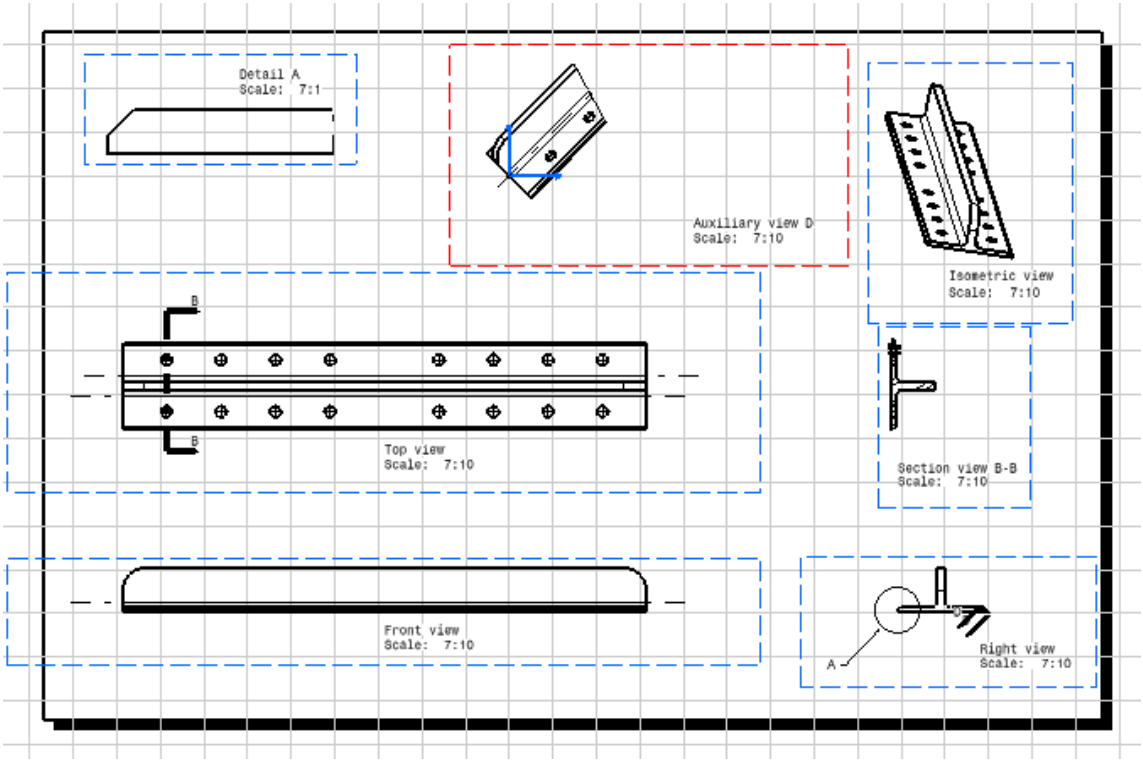

Lesson: T-Shaped Extrusion CAT Drawing

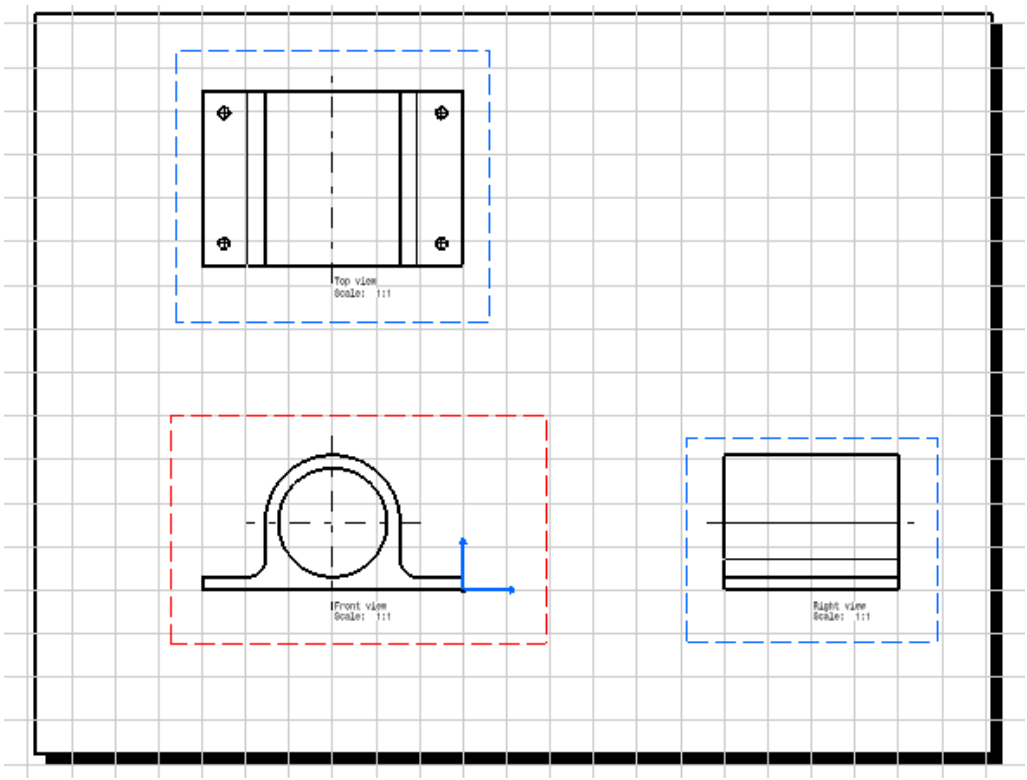

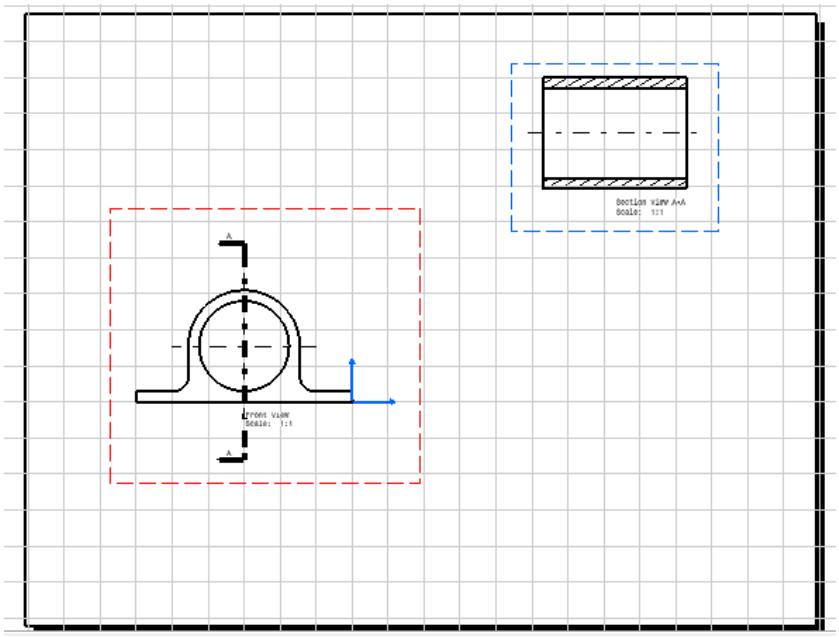

Exercise: 3

Lesson 6

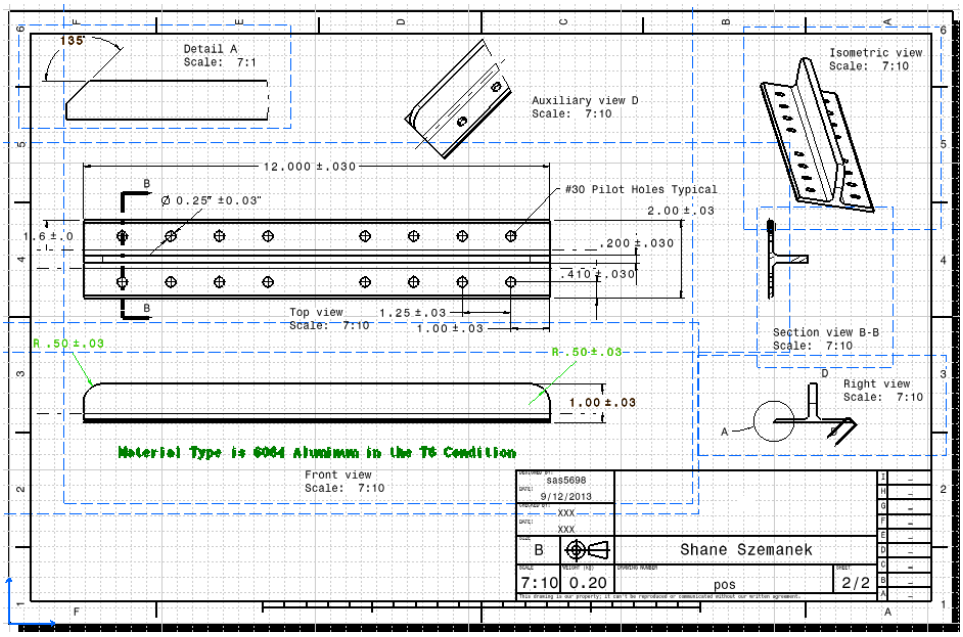

Lesson: T-Shaped Extrusion CAT Drawing

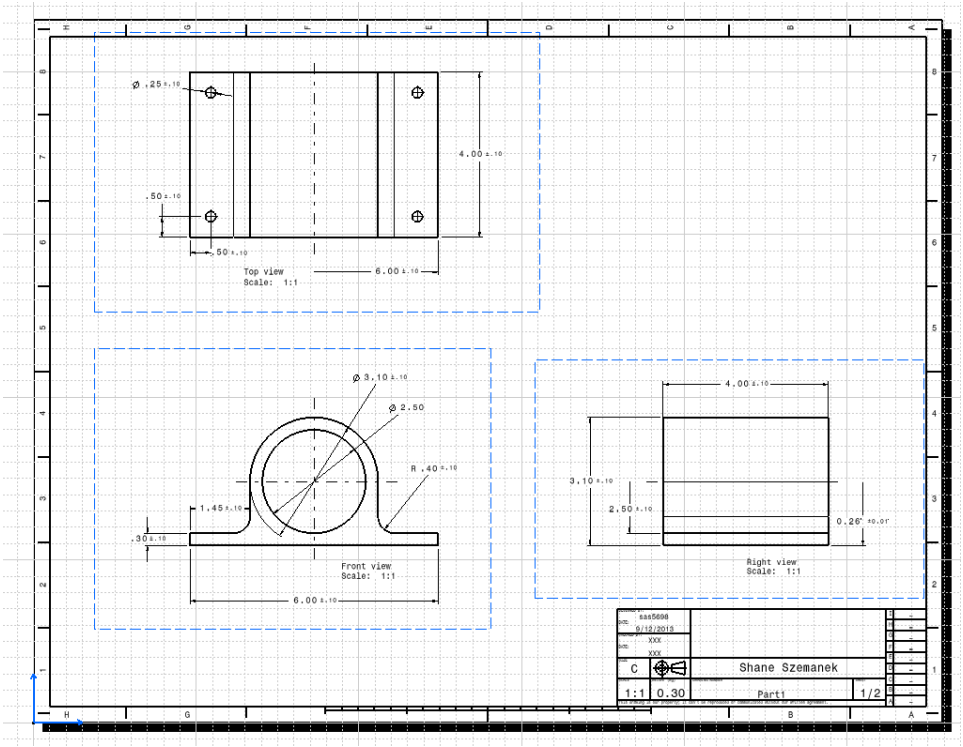

Exercise: 3

Lesson 7

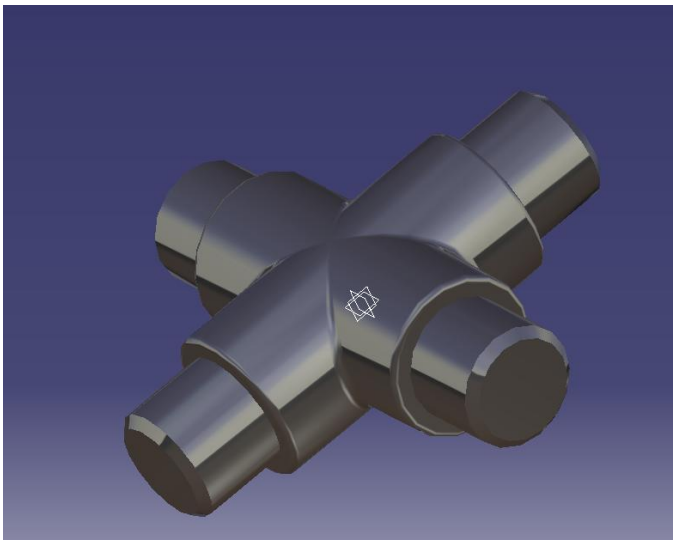

Lesson: Swivel

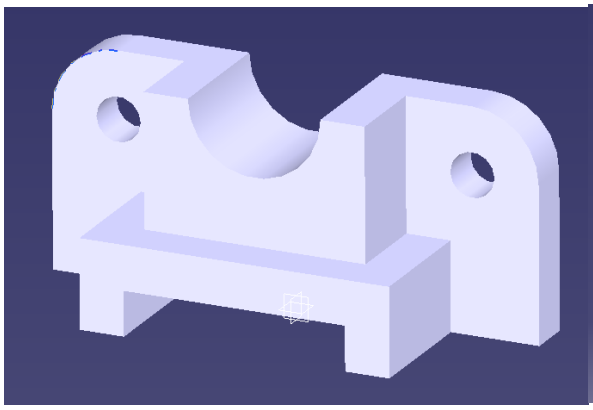

Exercise: 3

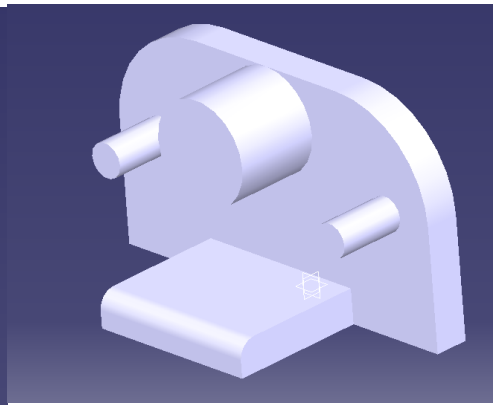

Exercise: 5

Lesson 8

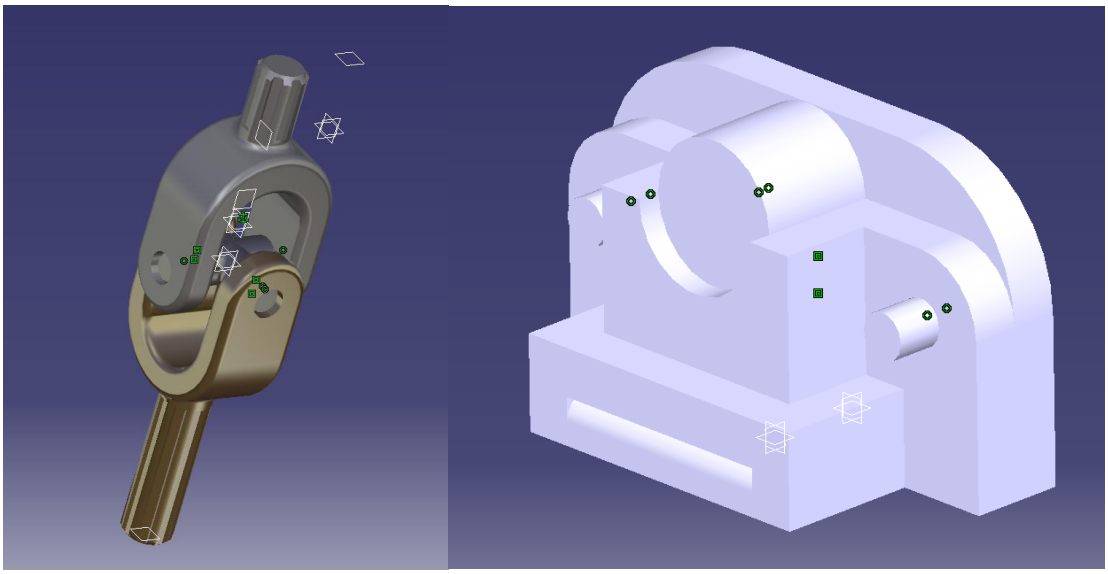

Lesson: U Joint Assembly **Exercise**: 4

Lesson 9

Lesson: Slinky

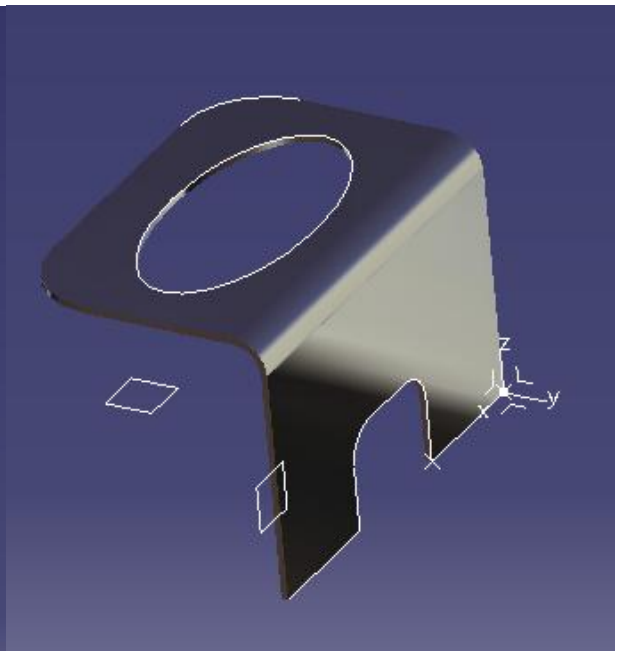

Lesson: Sheet Metal Bracket

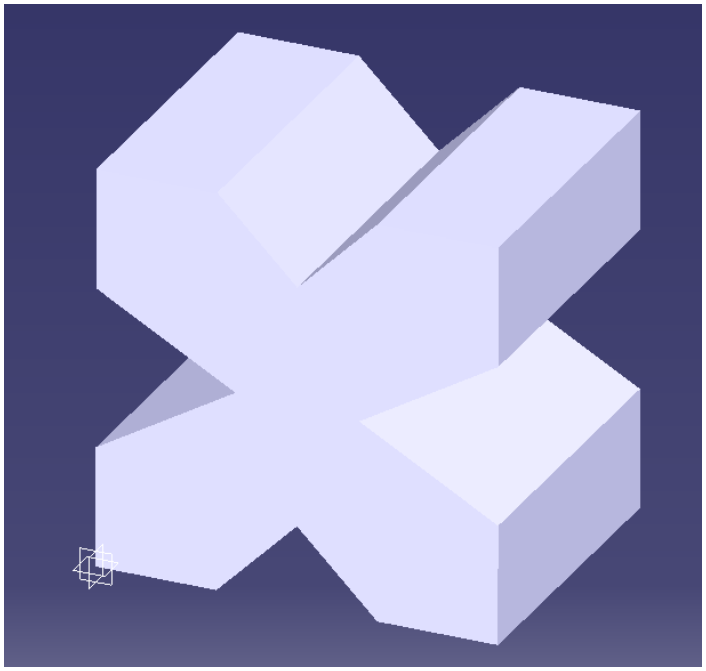

Exercise: 2

Lesson 10

Lesson: Joggled Extrusion

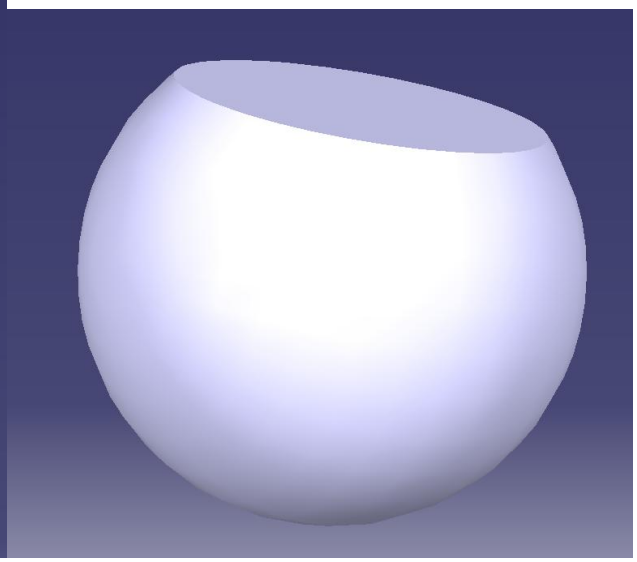

Lesson: Joined Surface to Solid

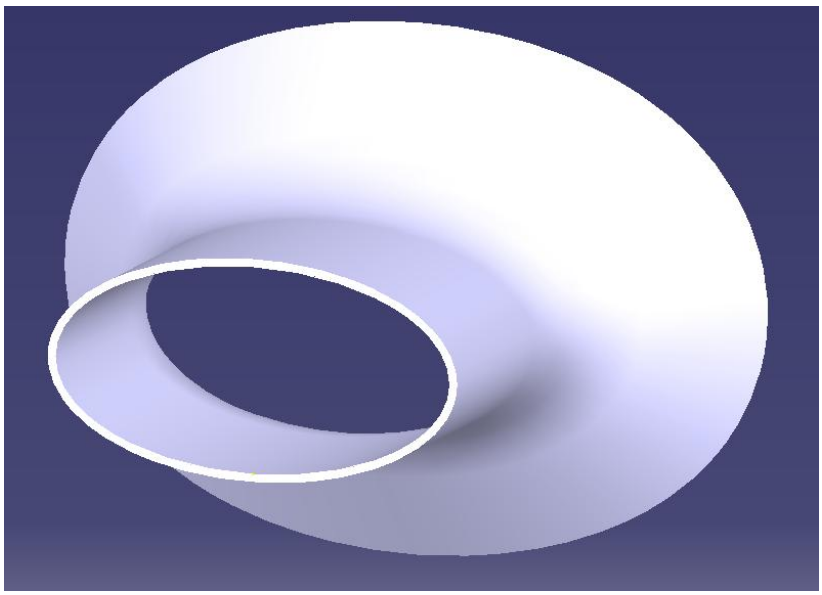

Exercise: 1

Lesson 12

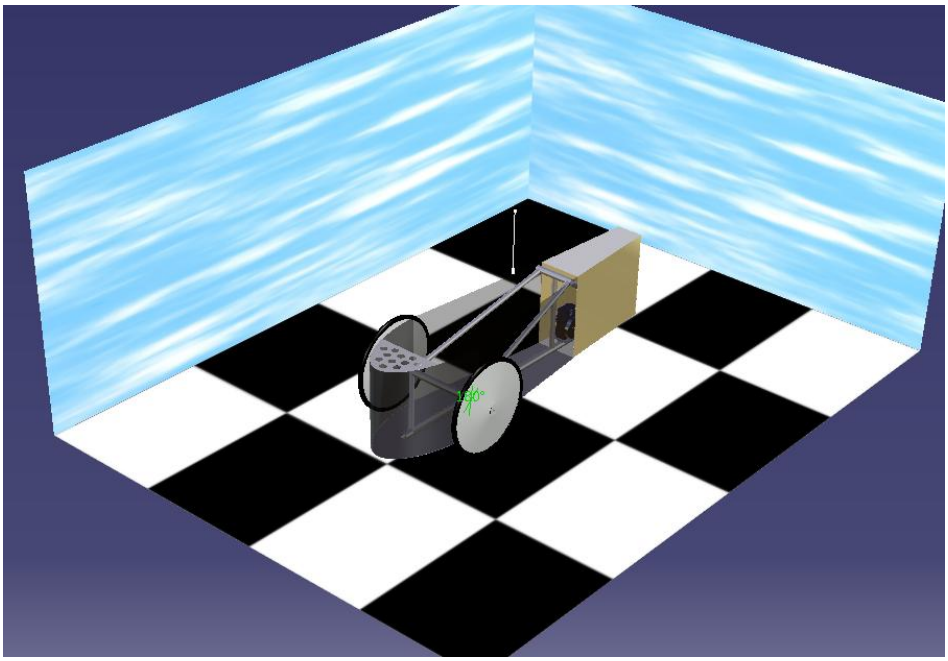

Lesson: Renderings

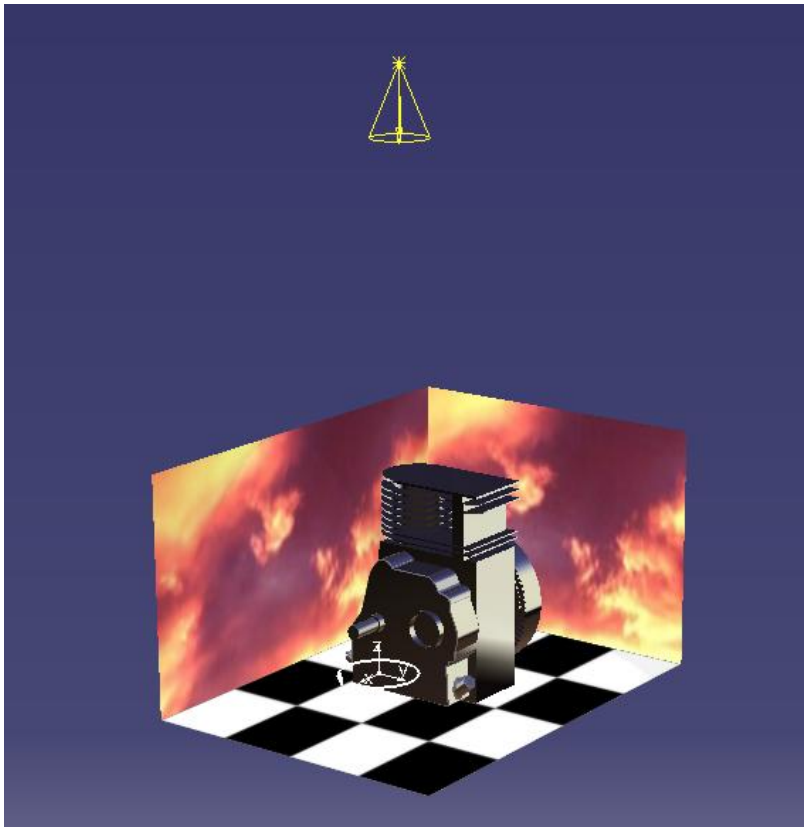

Exercise: Turntable

Lesson 13

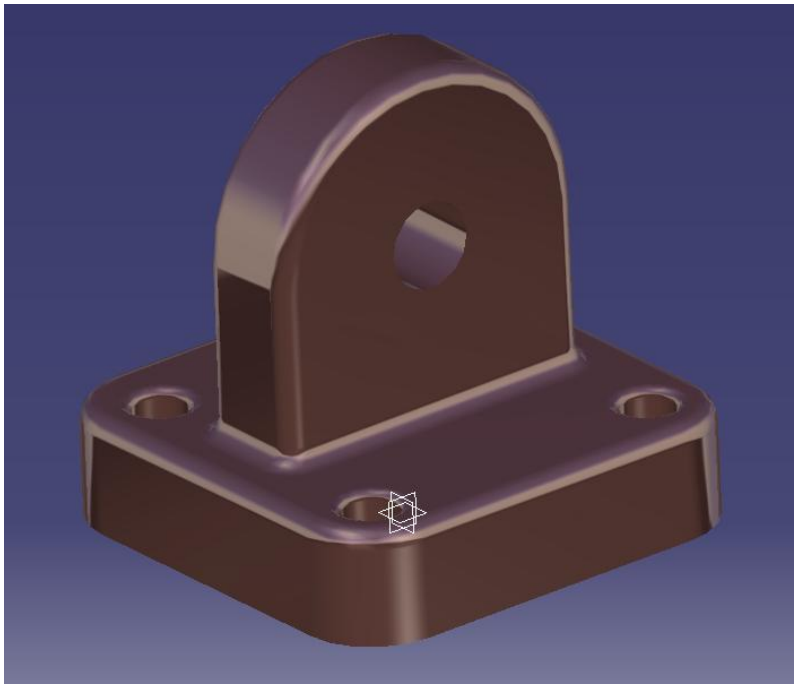

Lesson: Constraints

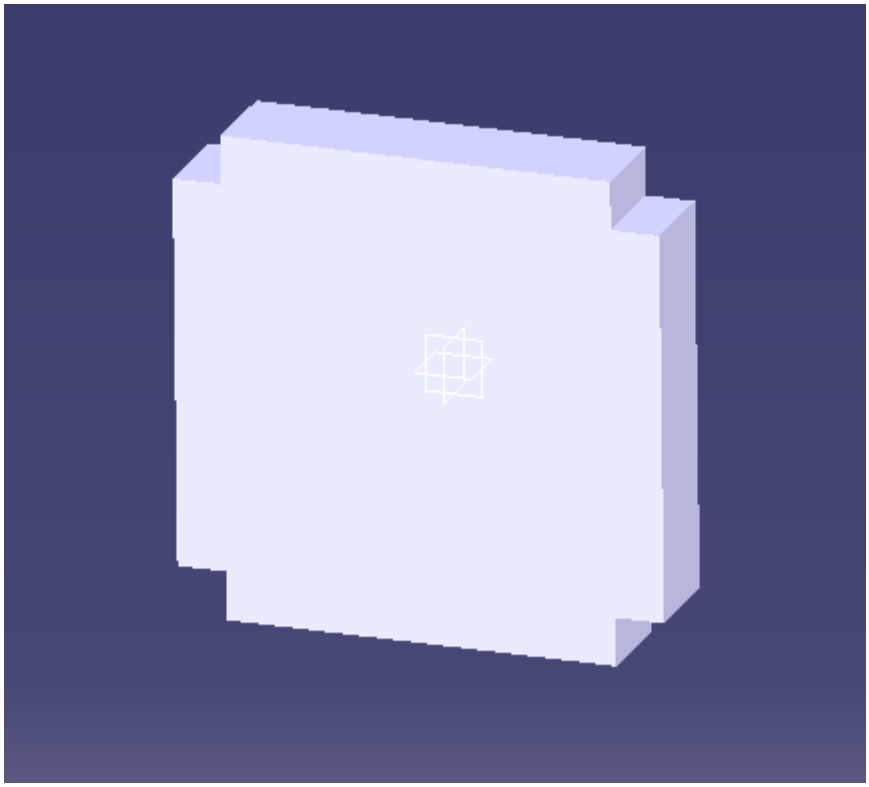

Exercise: 3

Surface Modeling Tutorial

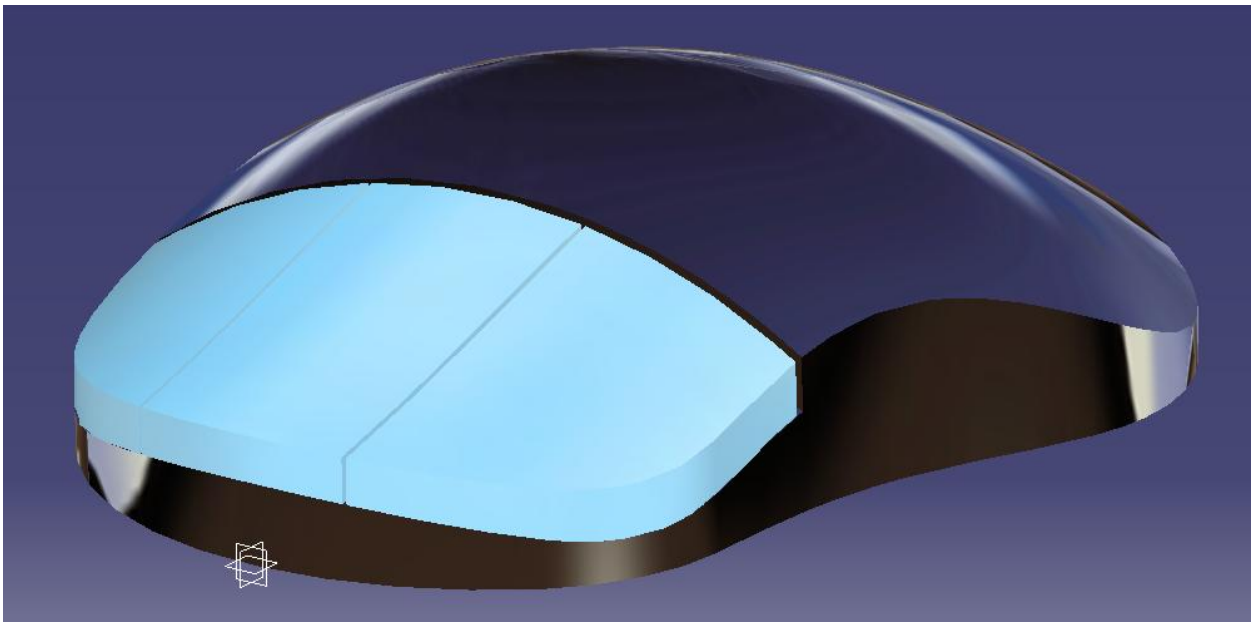

Mouse using Surfacing Techniques

CATIA V5 Finite Element Analysis Tutorials

Lesson 2

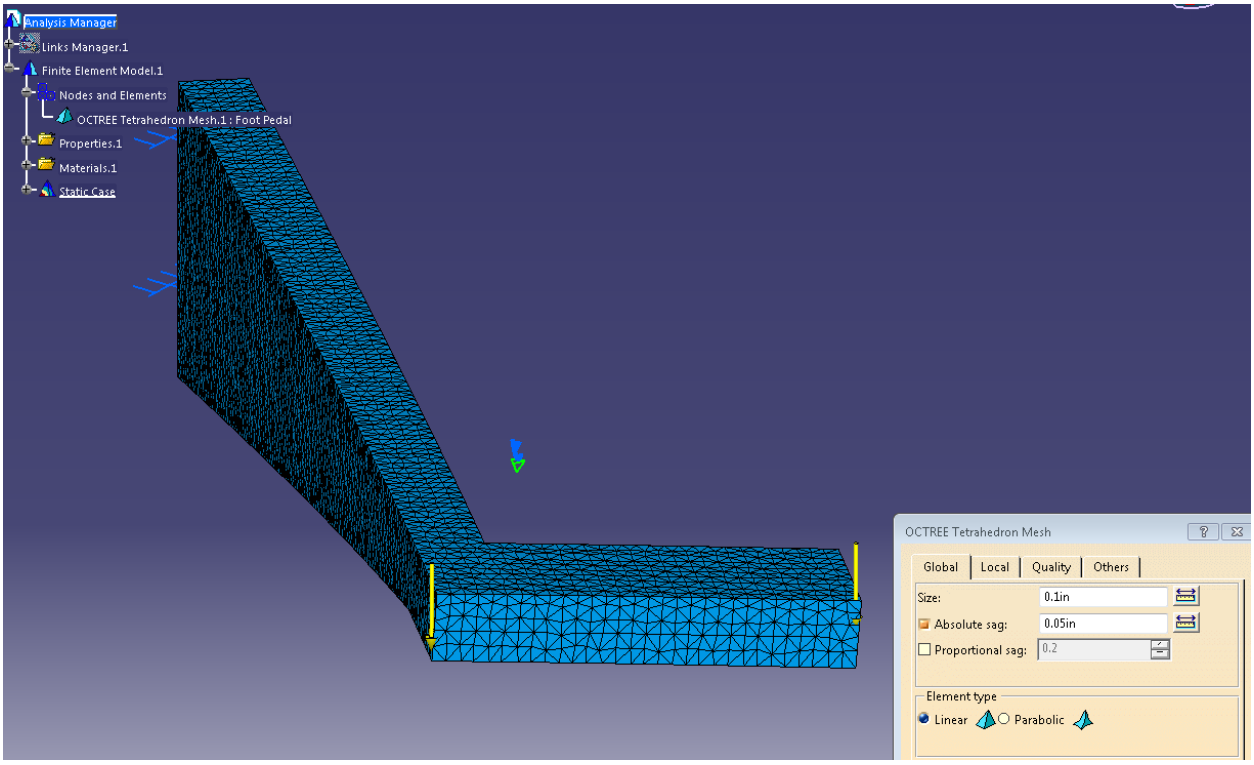

Exercise: 1a

Lesson 3

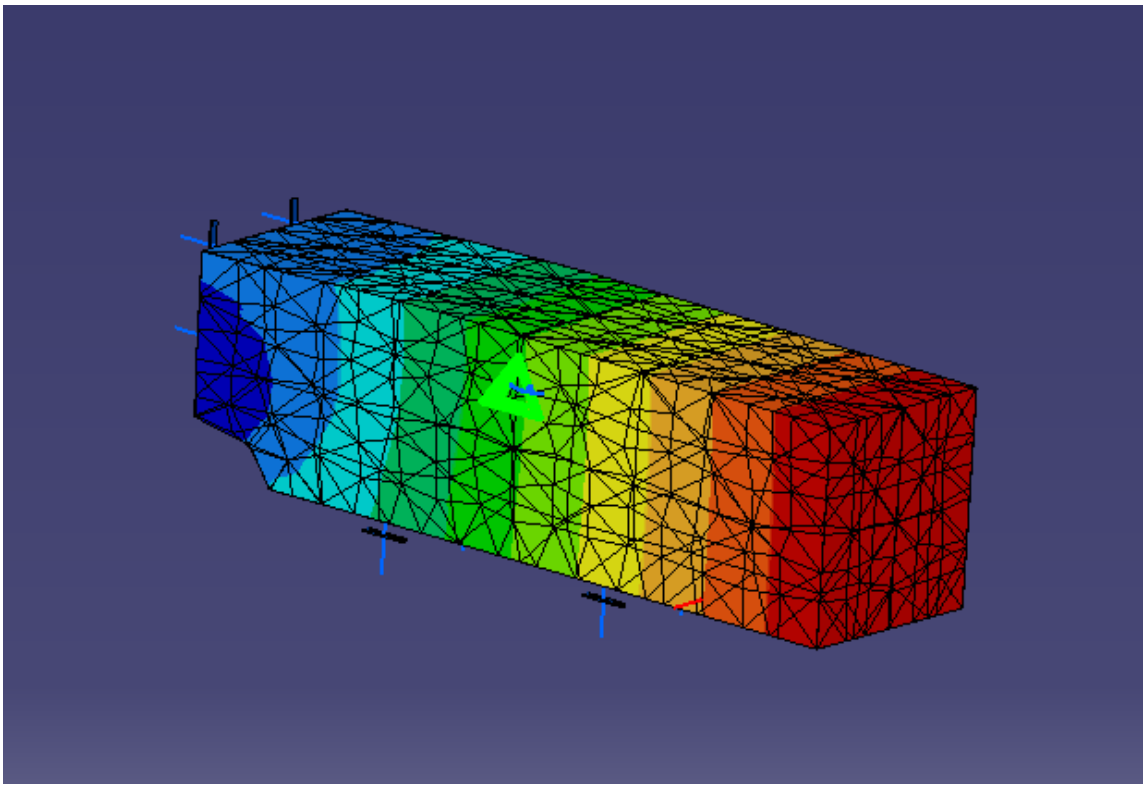

Lesson: Tutorial

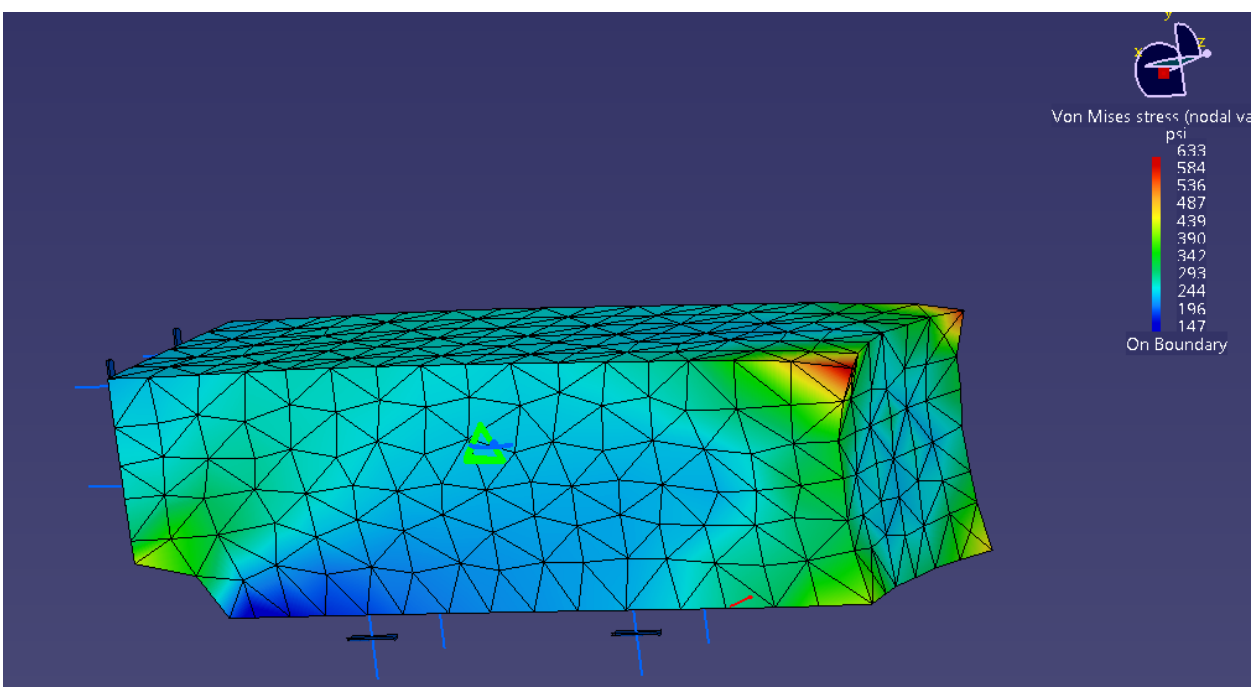

Exercise: 2

Lesson 5

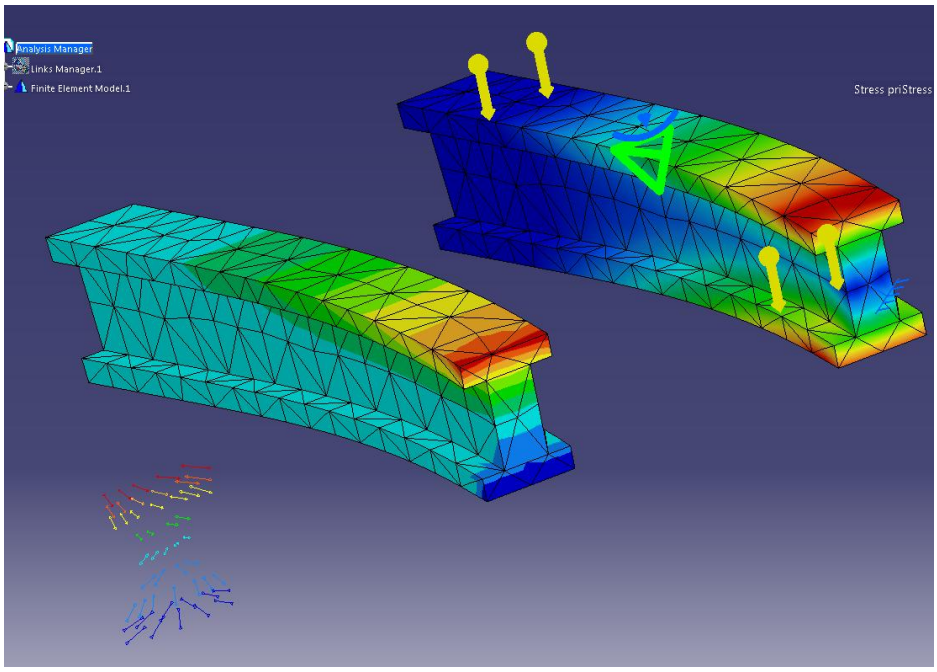

Lesson: I-Beam Deformation

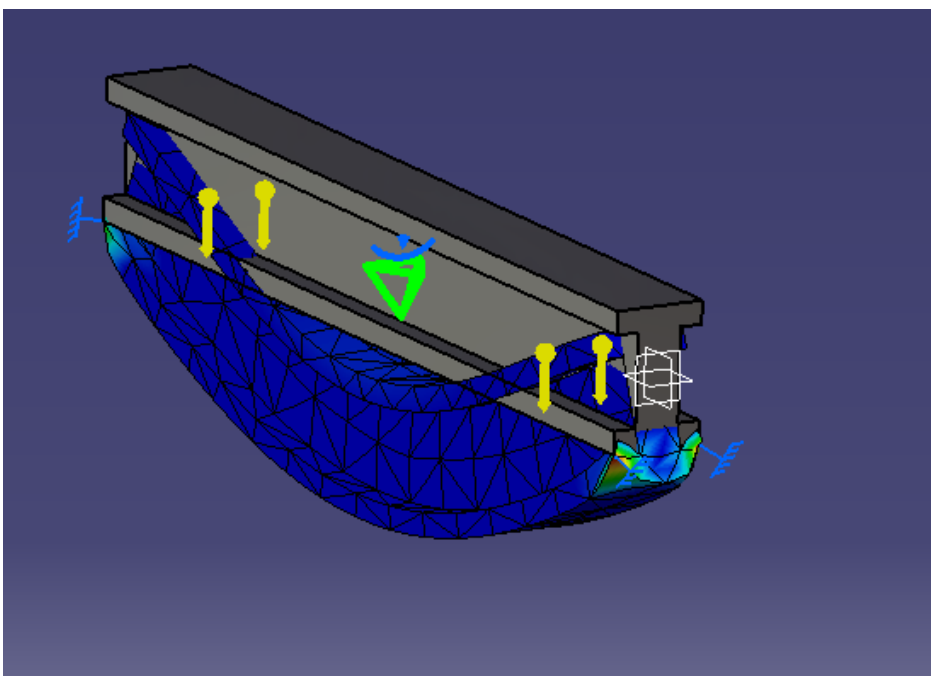

Exercise: Beam Deflection

Lesson 6

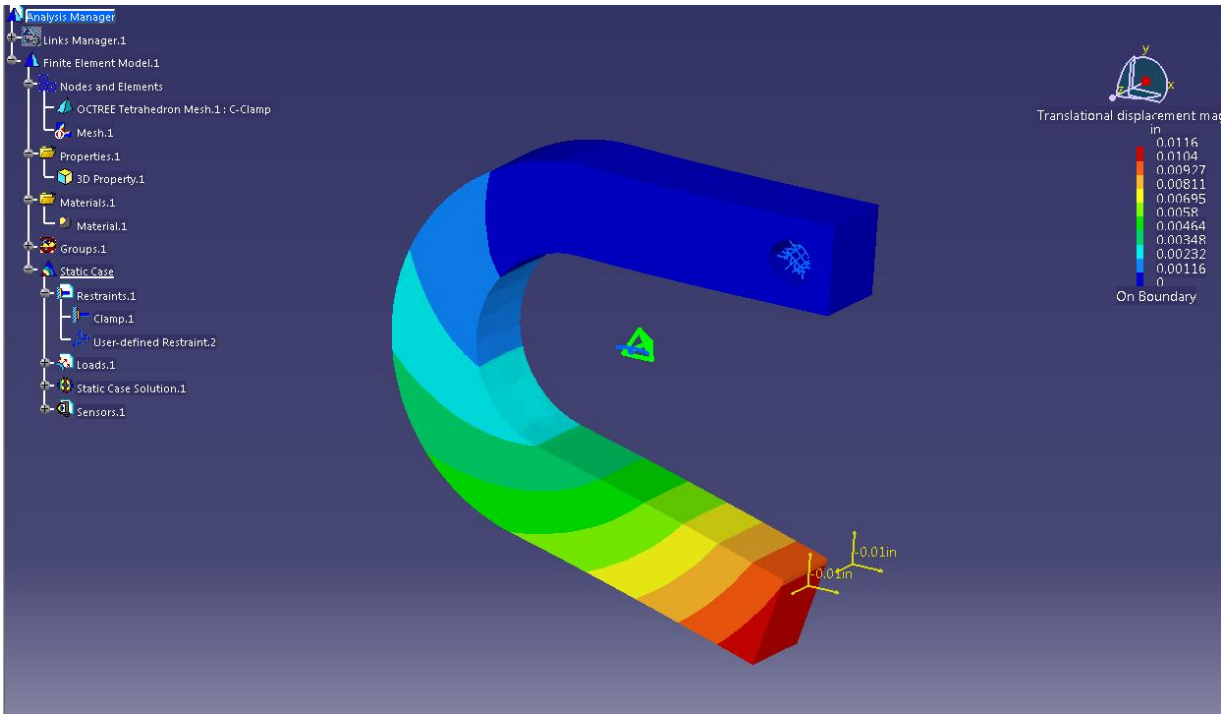

Lesson: C-Clamp

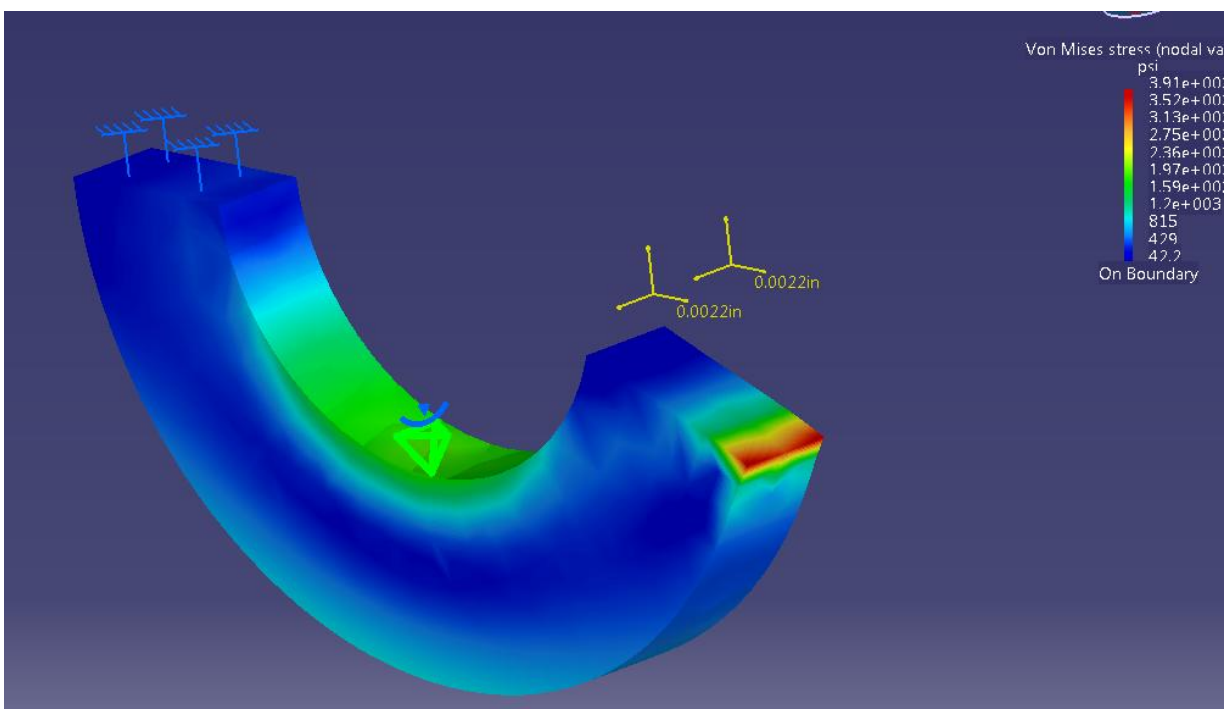

Exercise: Enforced Displacement

Lesson 7

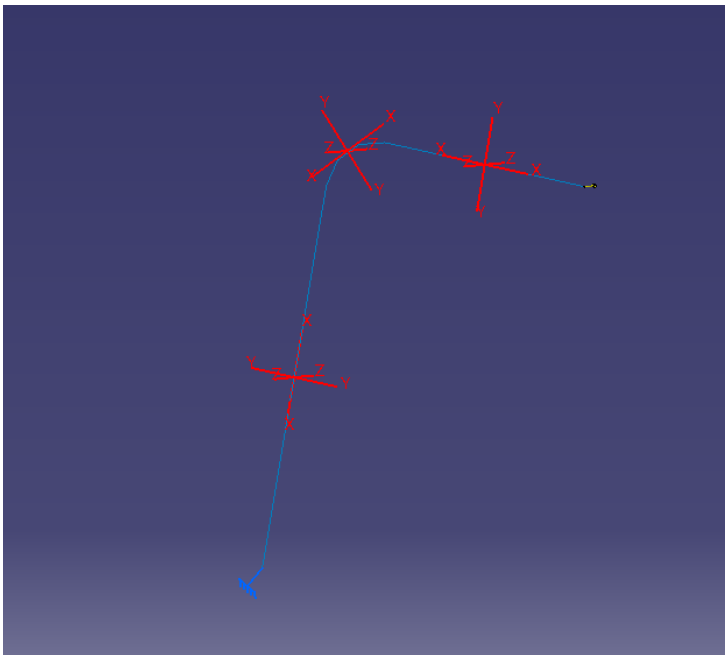

Lesson: Curved Beam

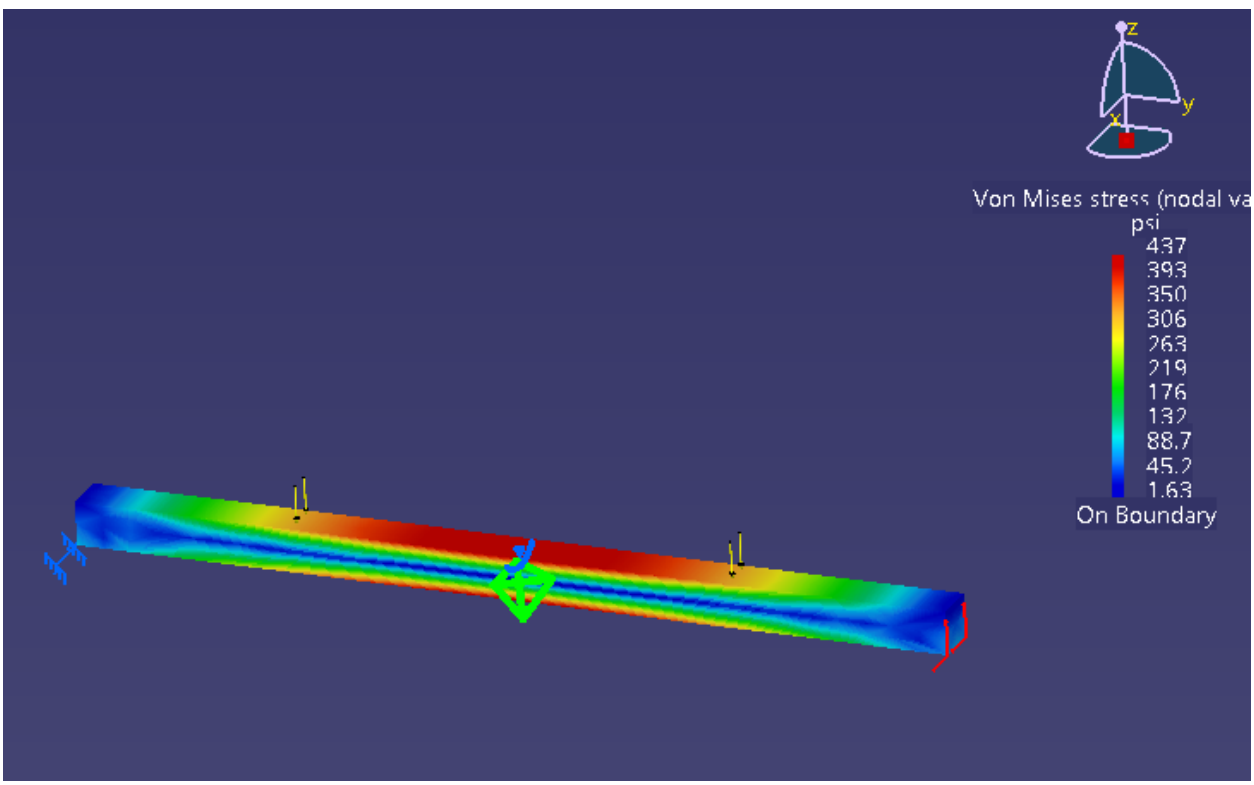

Exercise: Simple Beam

Lesson 9

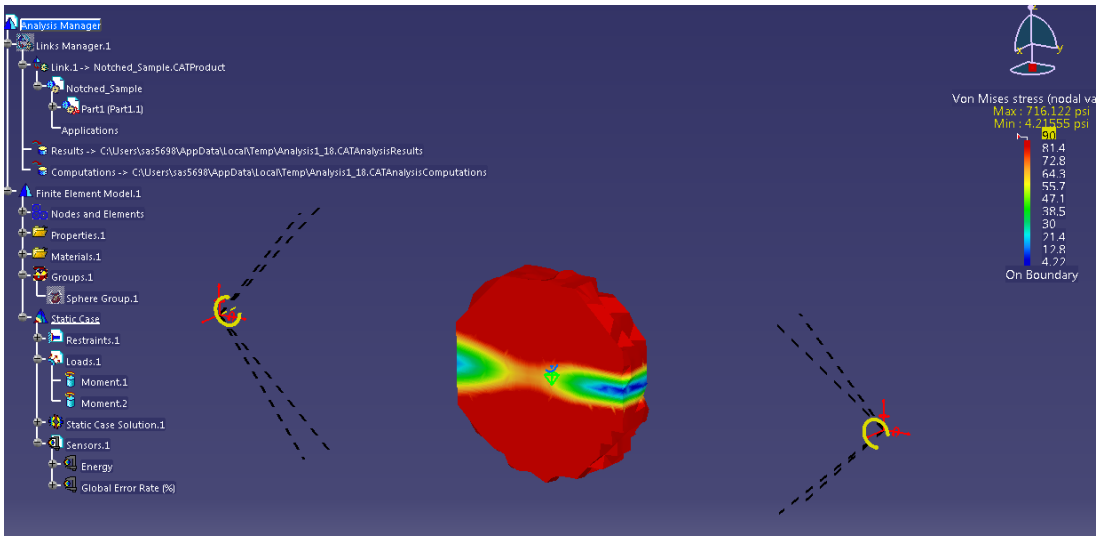

Lesson: Sphere Grouping

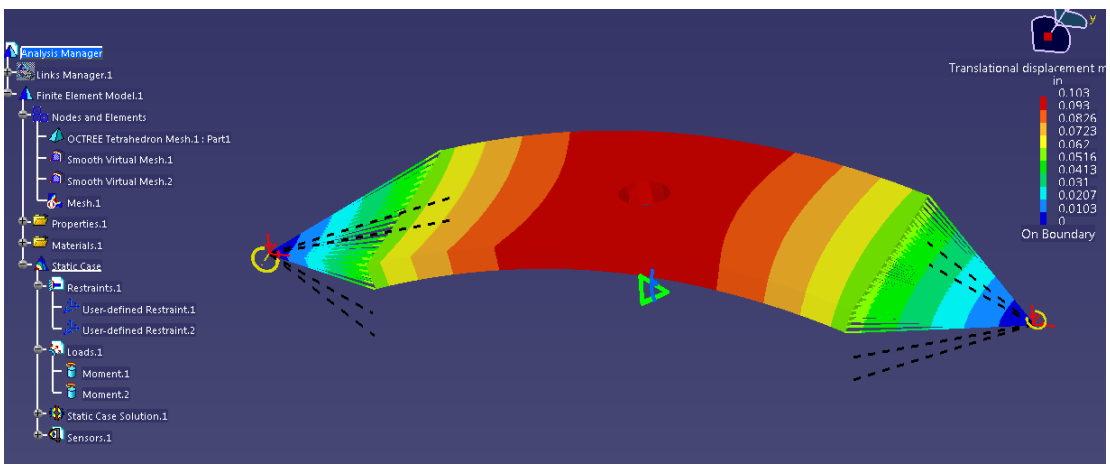

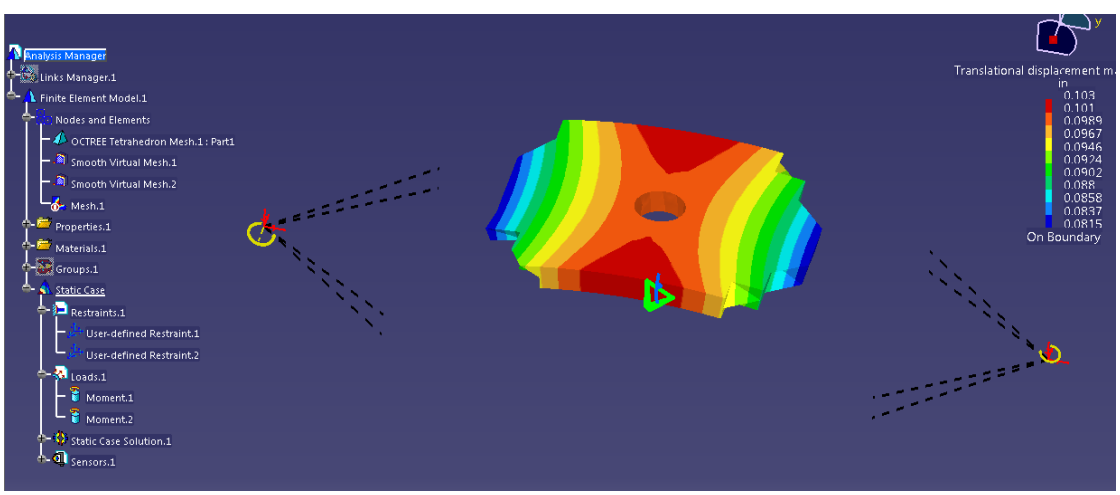

Exercise: Bending Moment Simulation

Lesson 11

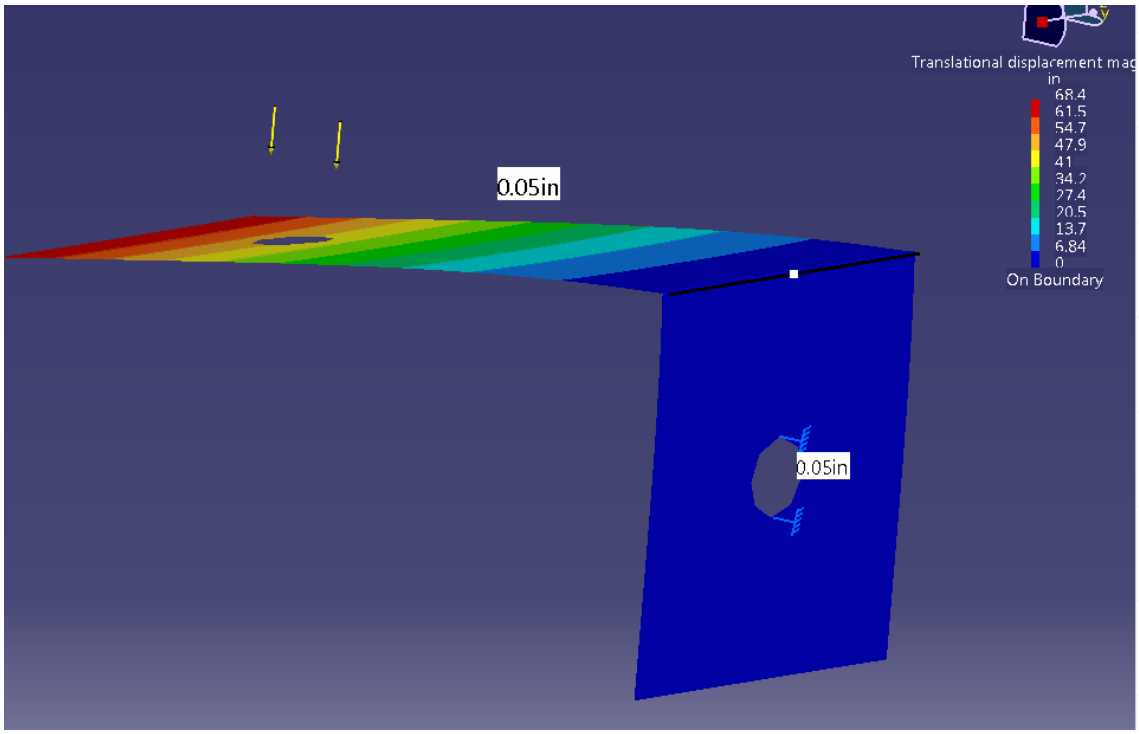

Lesson: L-Beam

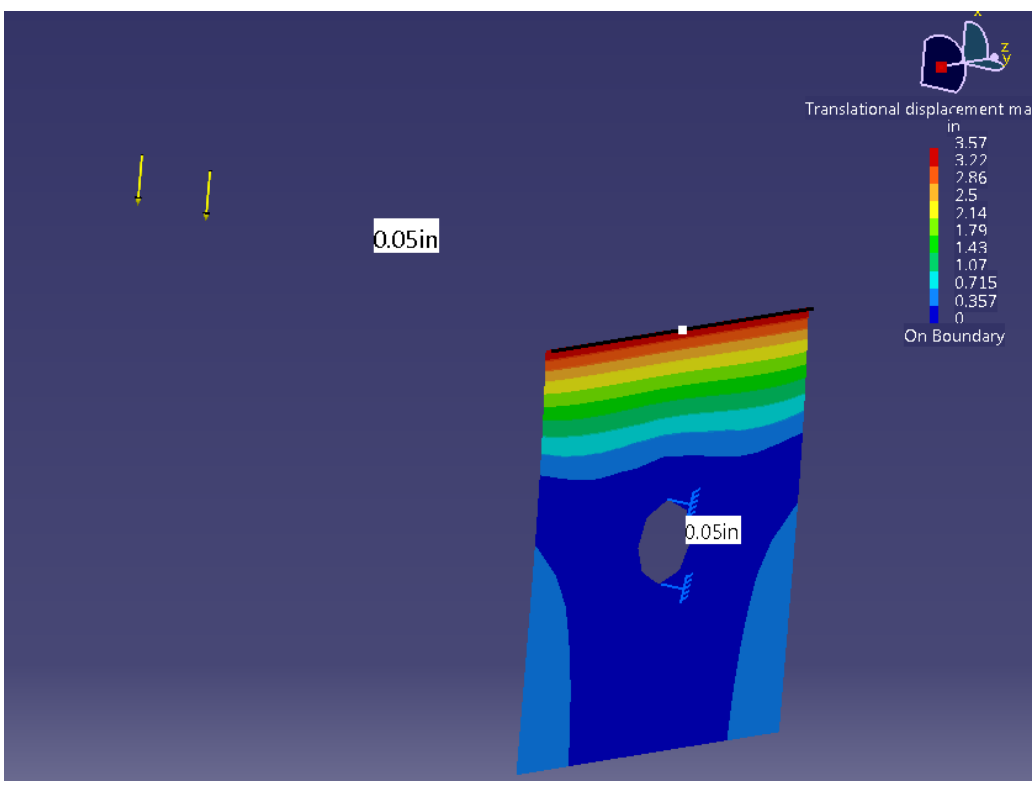

Exercise: Mismatch

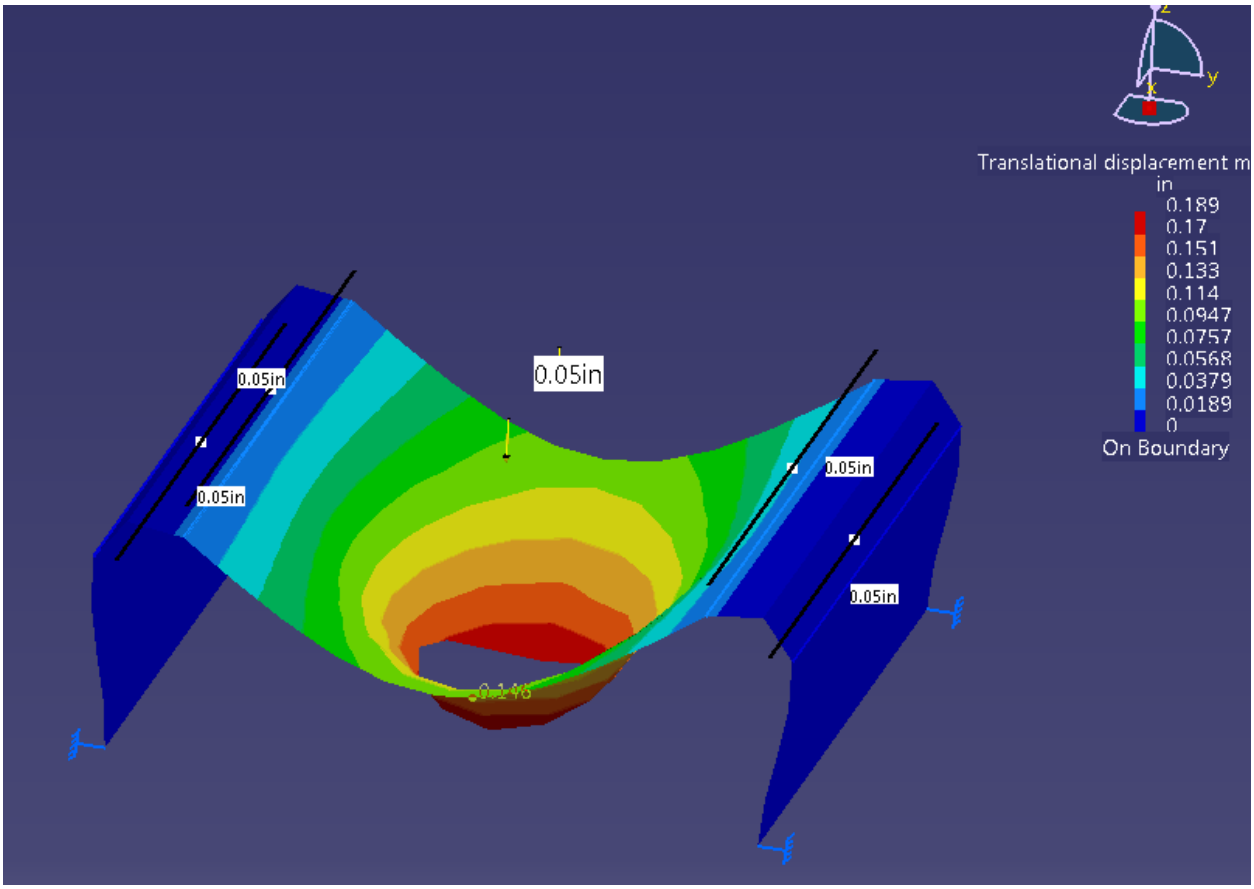

Exercise: Bracket

Lesson 14

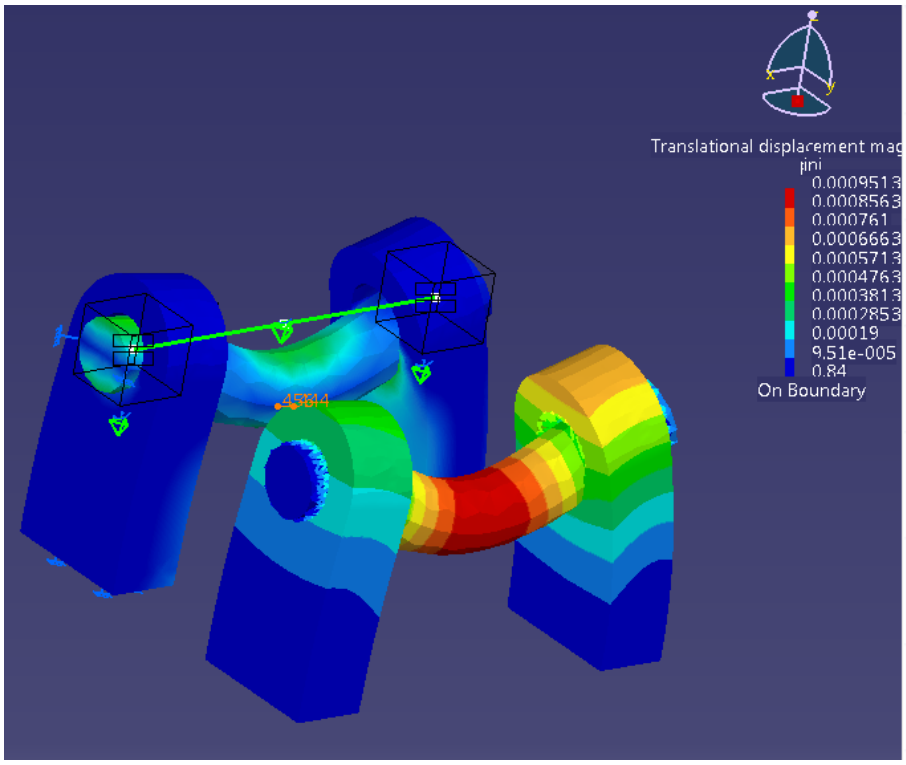

Lesson: Beam

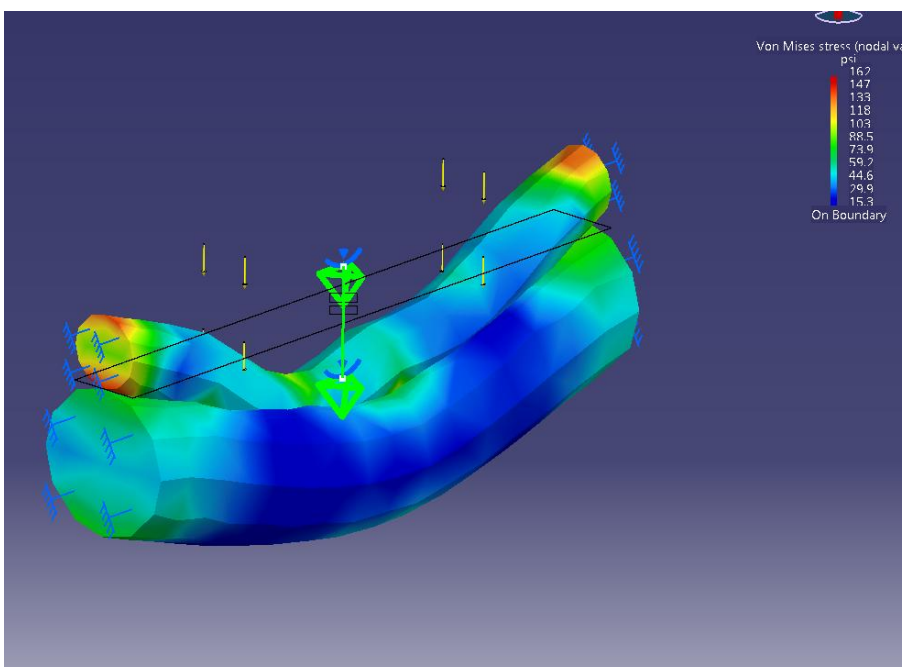

Exercise: Pressed Cylinders

Lesson 16

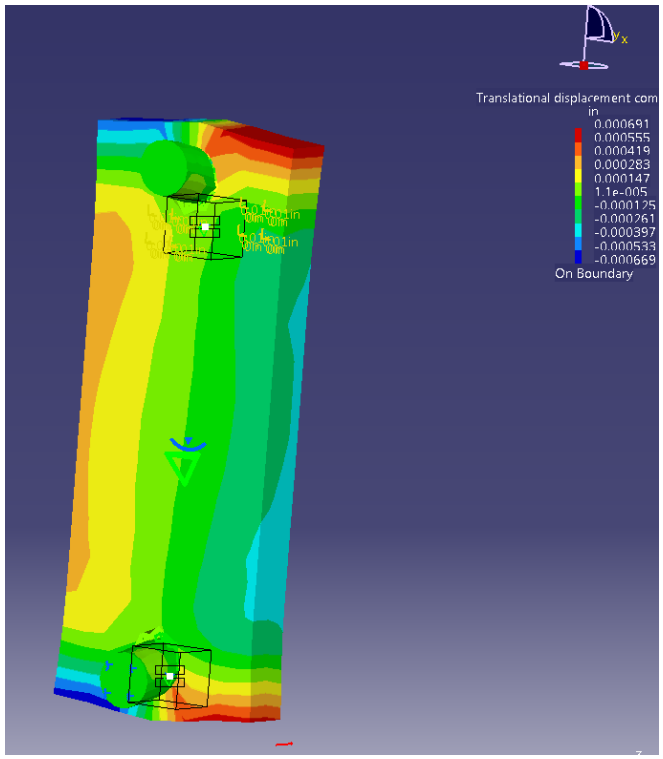

Lesson: Tensile Specimen

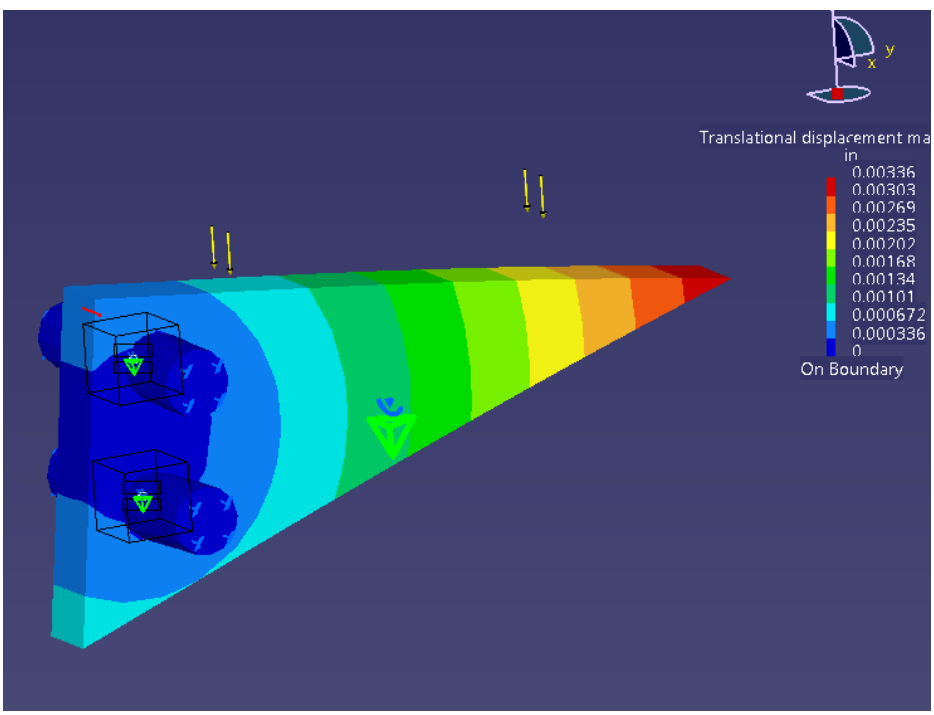

Exercise: Pressure Loading

Lesson 17

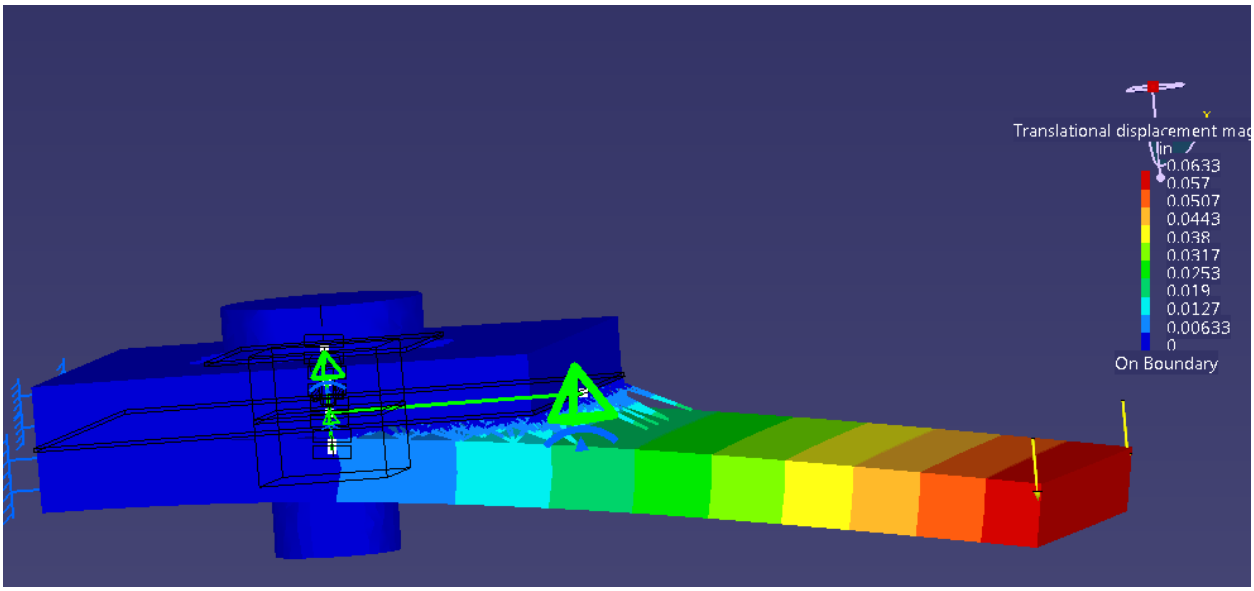

Tutorial: Fastened Assembly

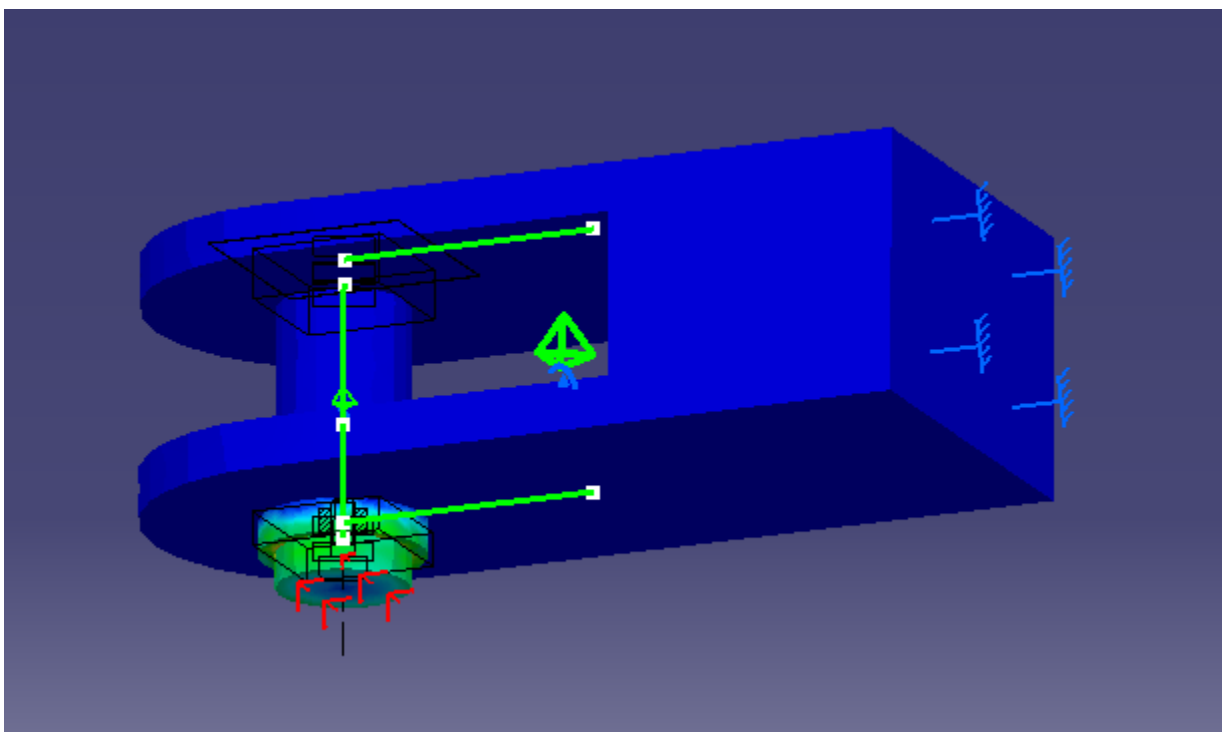

Exercise: Torqued Assembly

Mini Design Project: Perfume Bottle

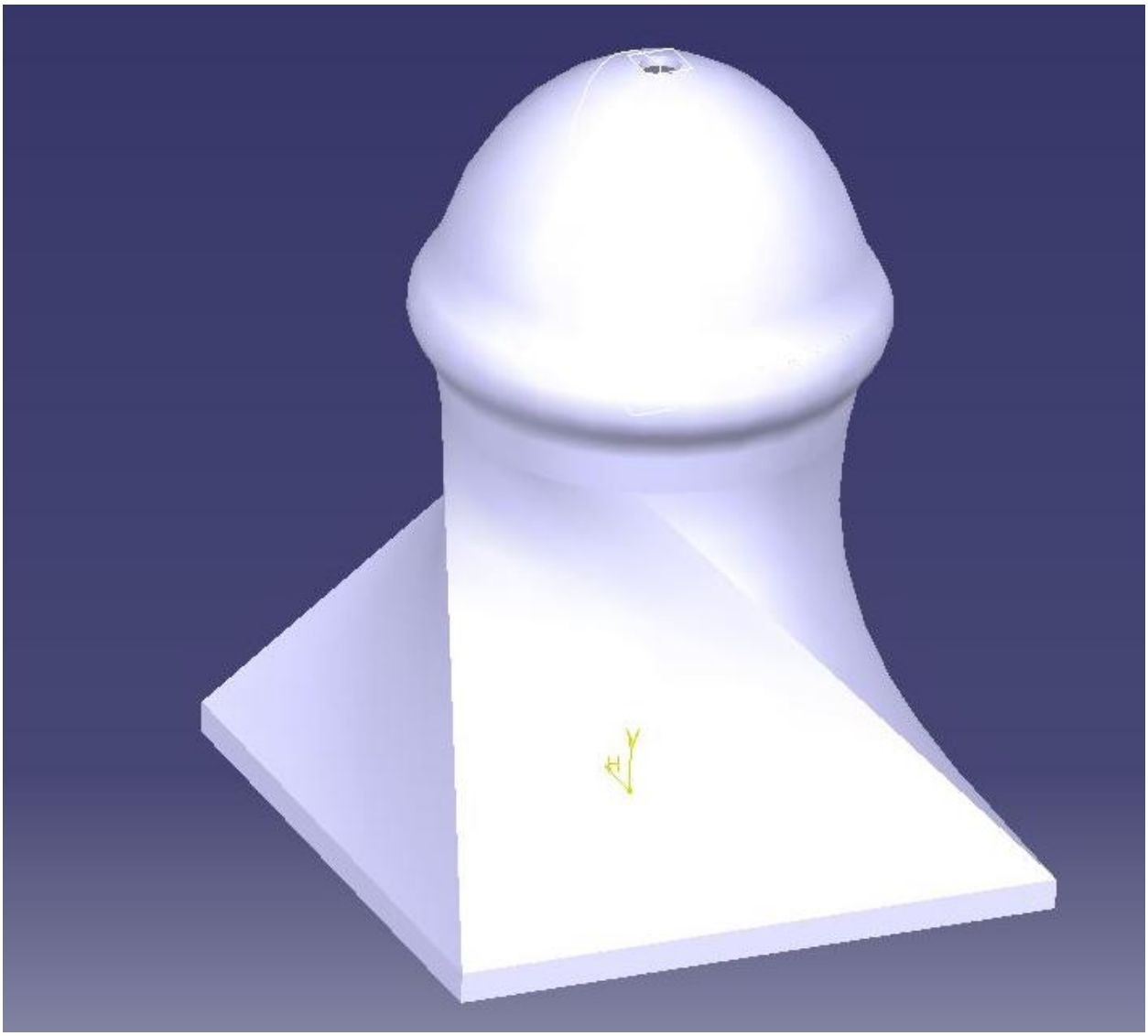

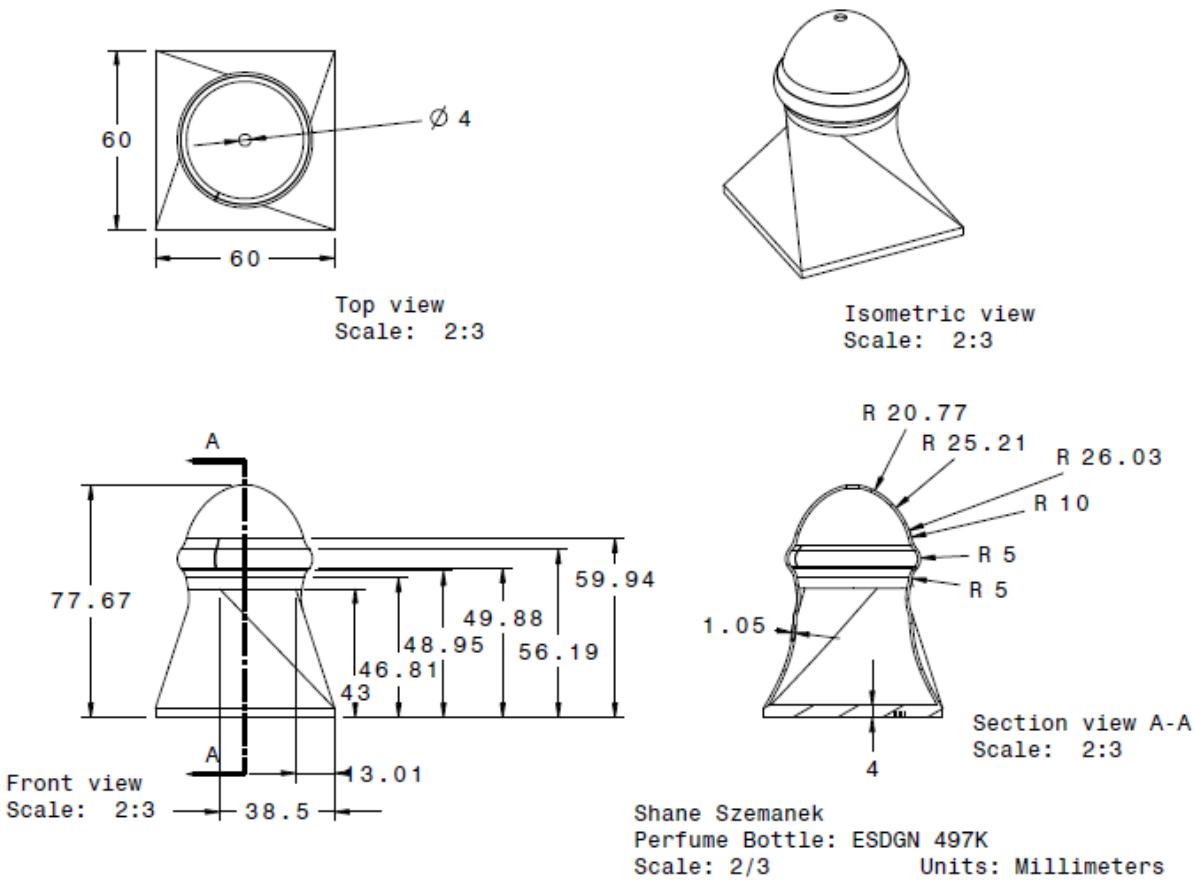

Perfume Bottle Drawings

Final Project: Innovative Chair

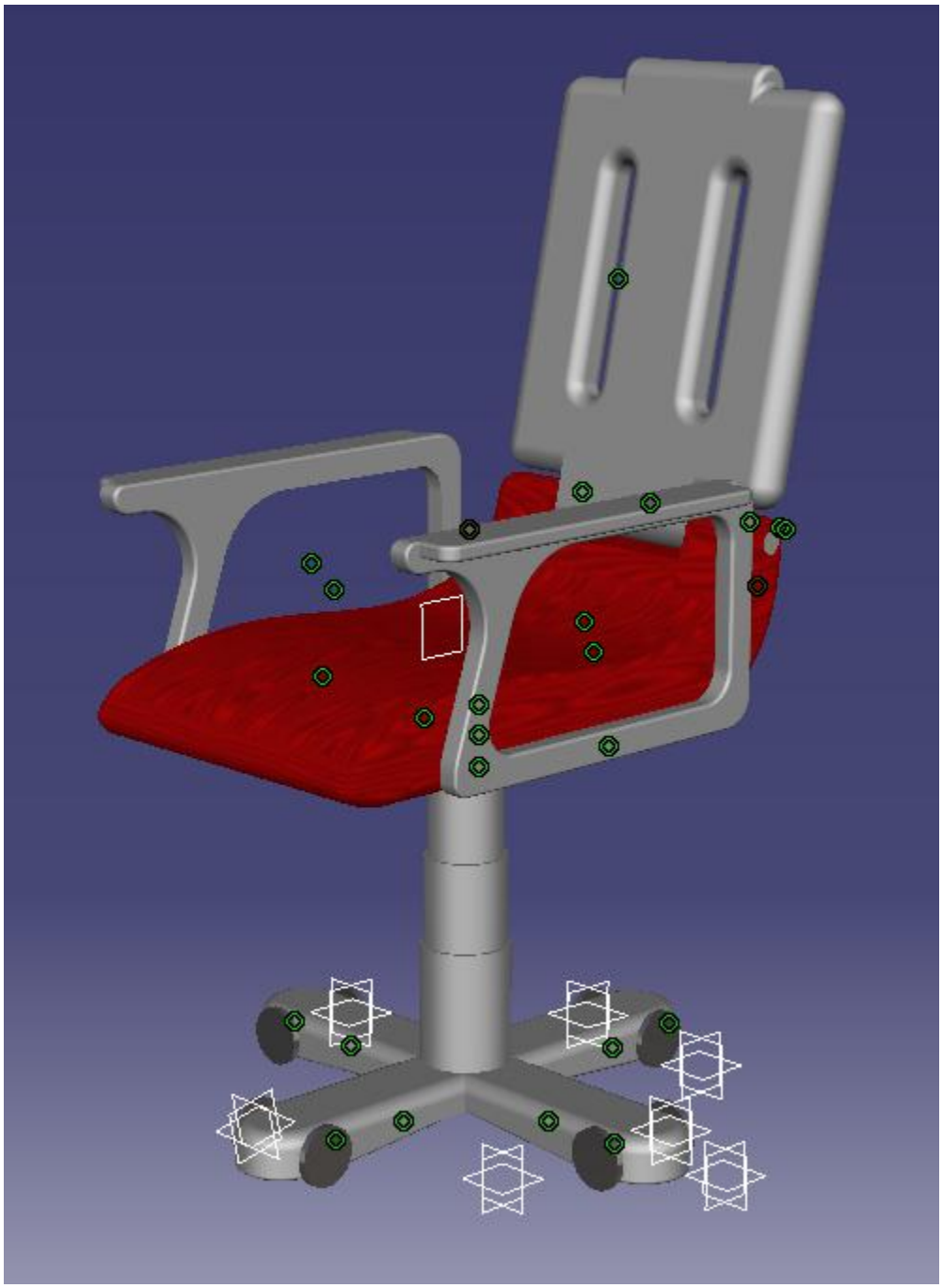

Isometric Assembly View

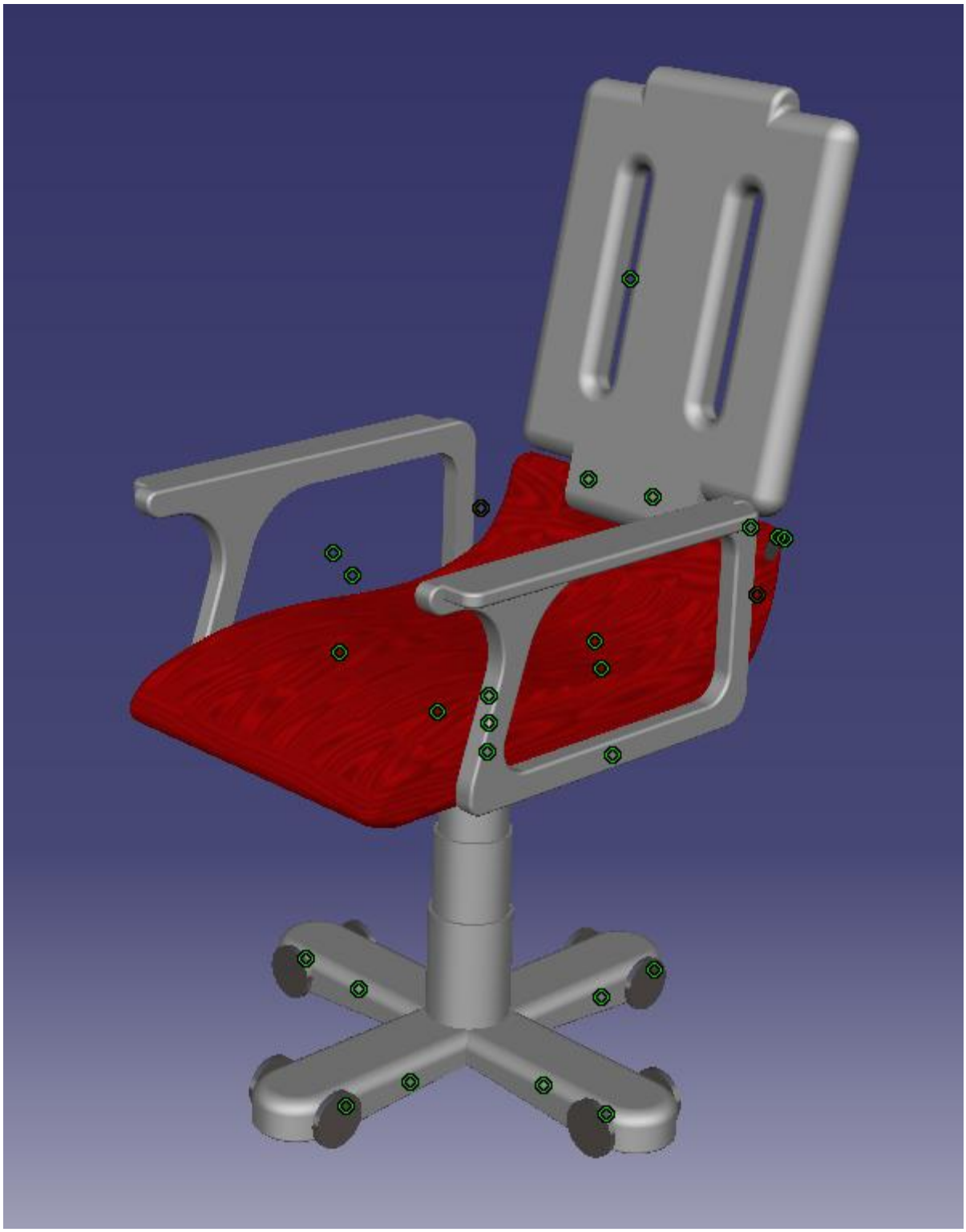

Isometric & Overhead Assembly View

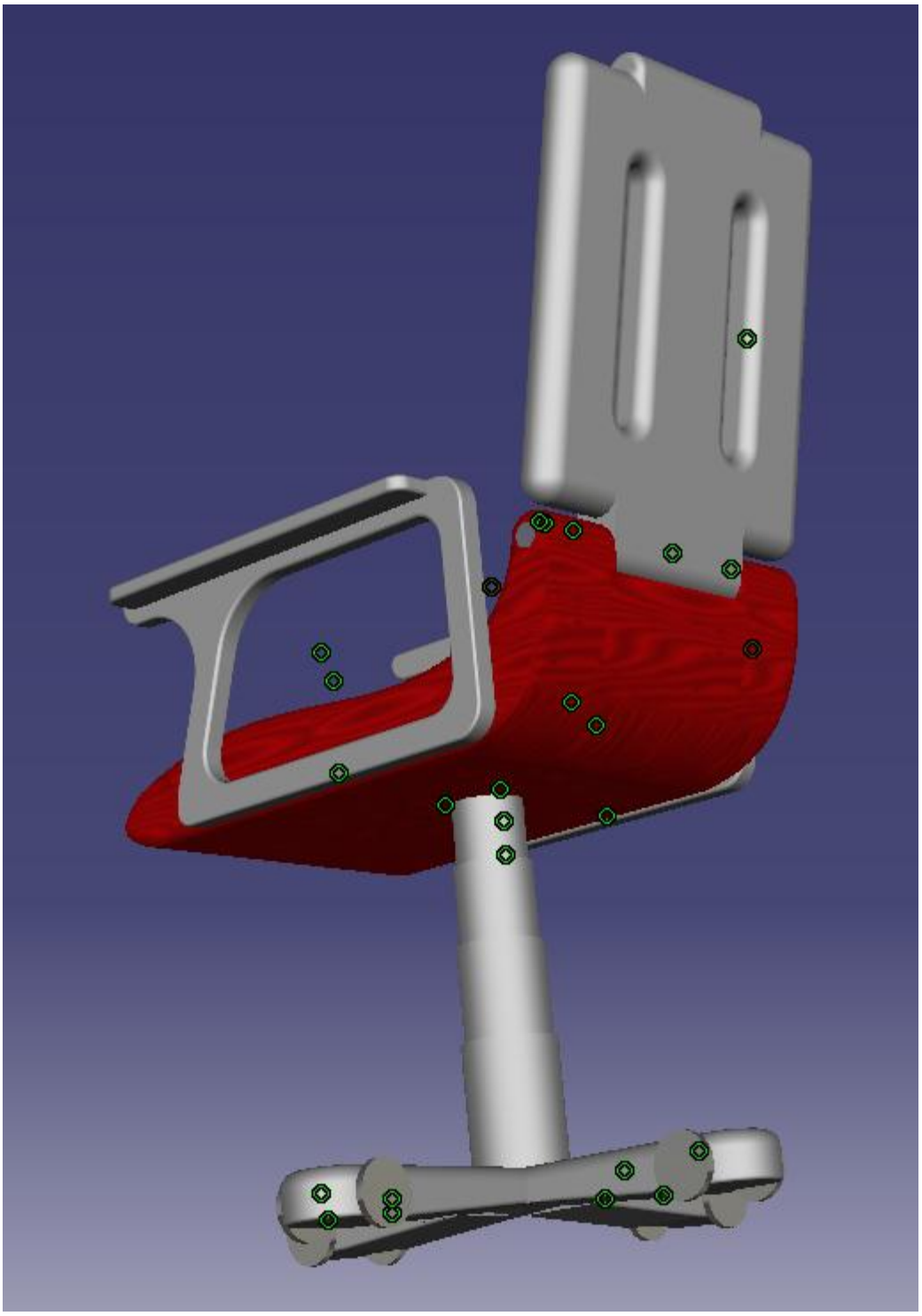

Rear & Bottom Assembly View

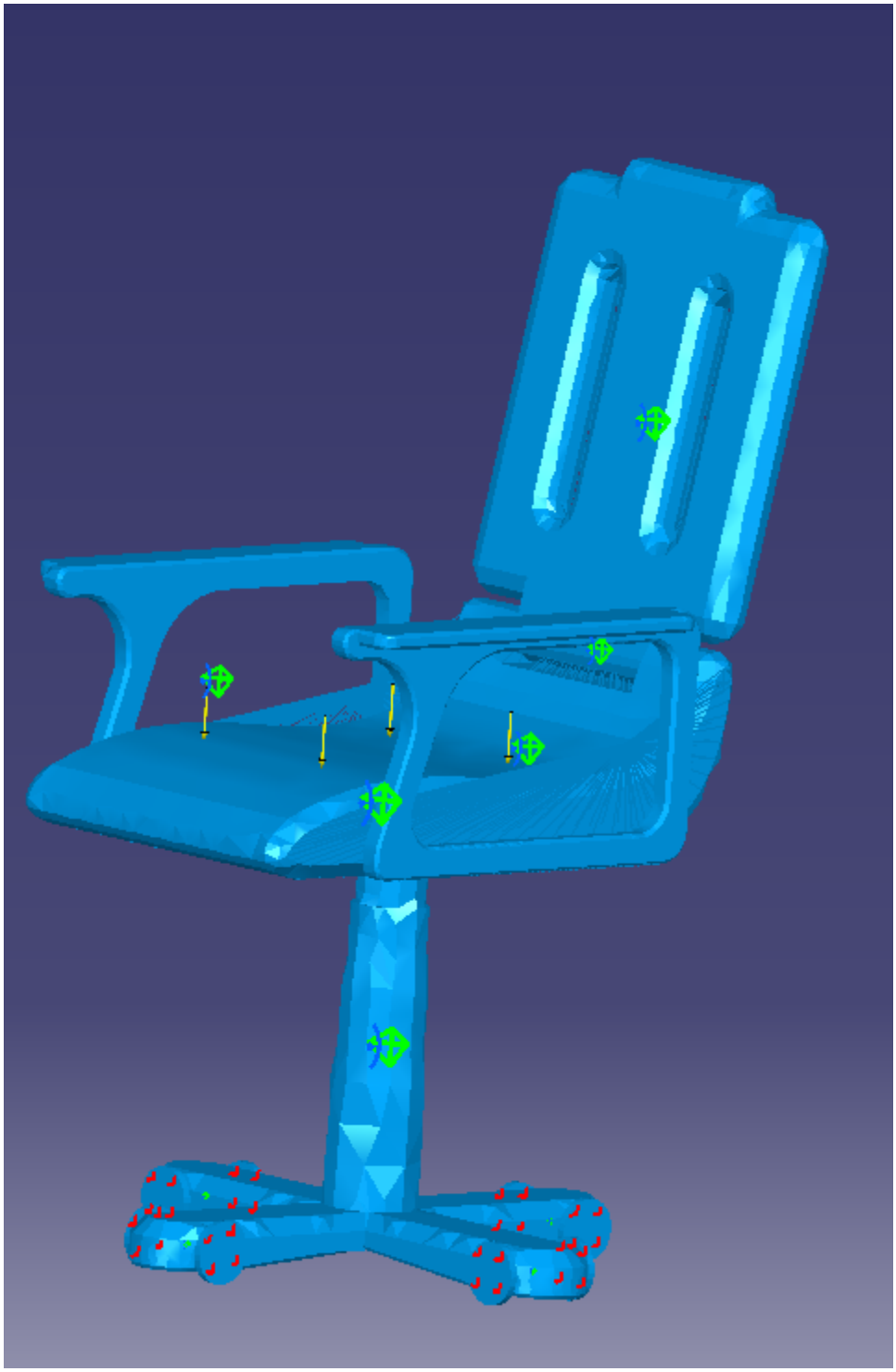

FEA Mesh

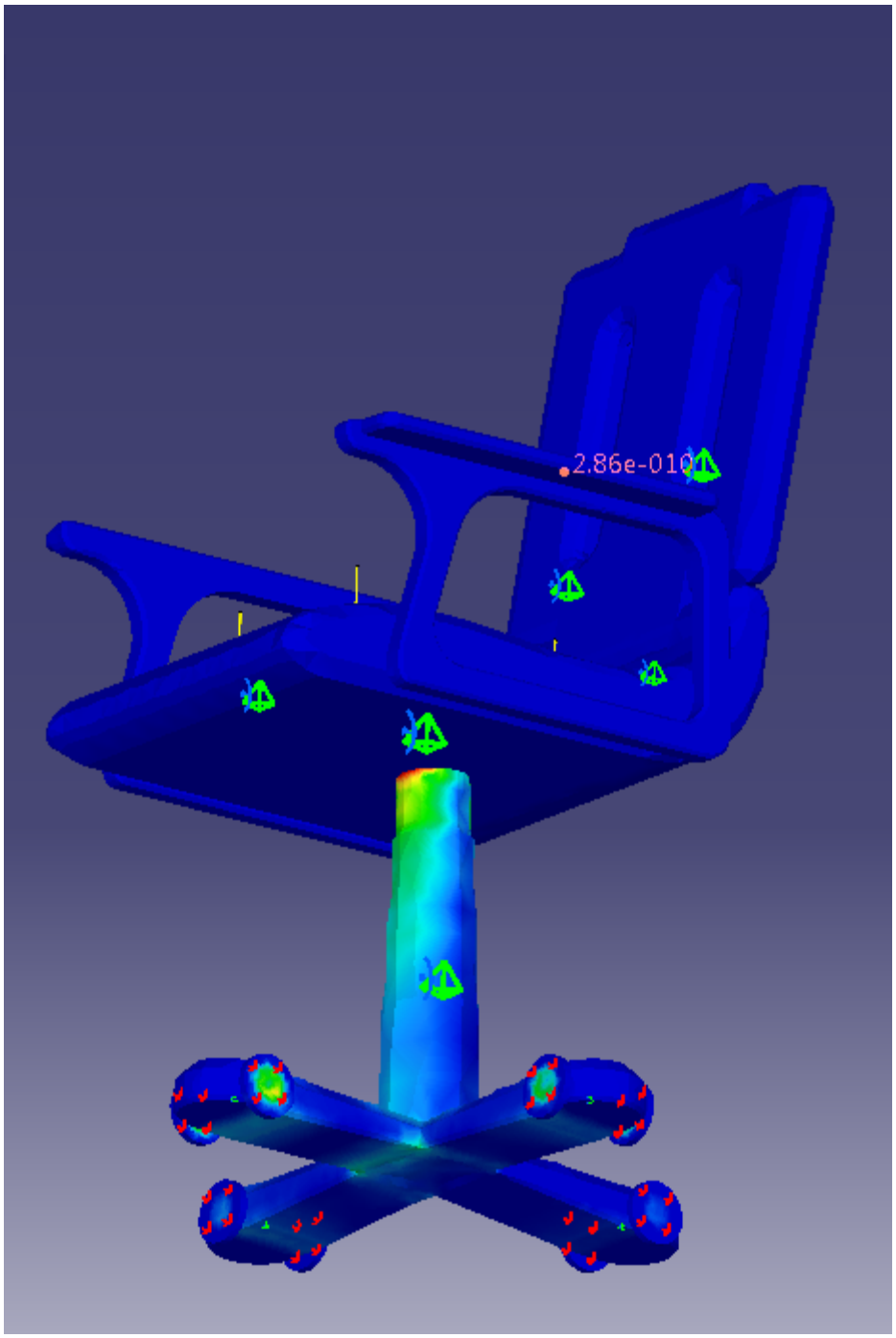

VonMises Stress

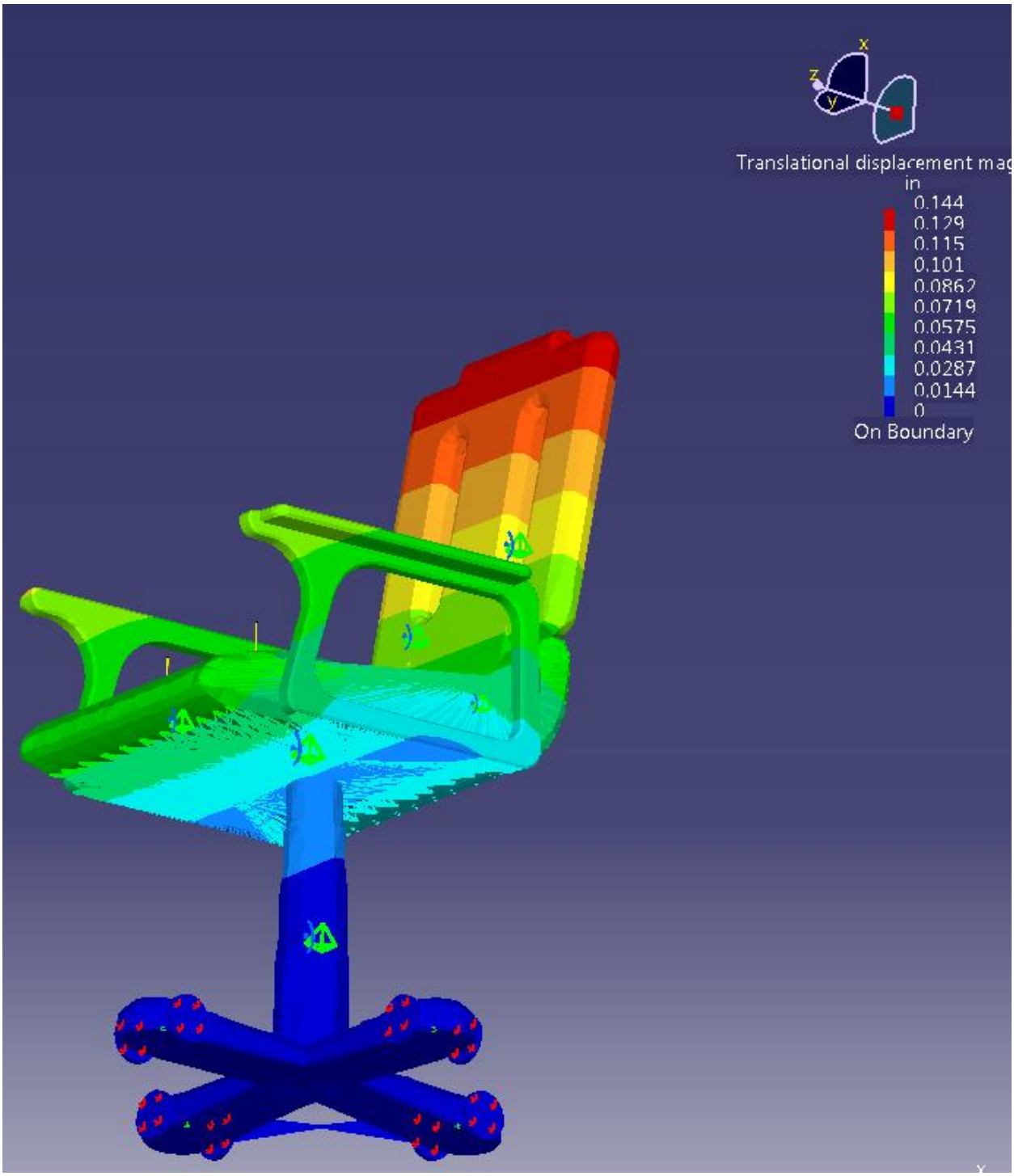

Displacement

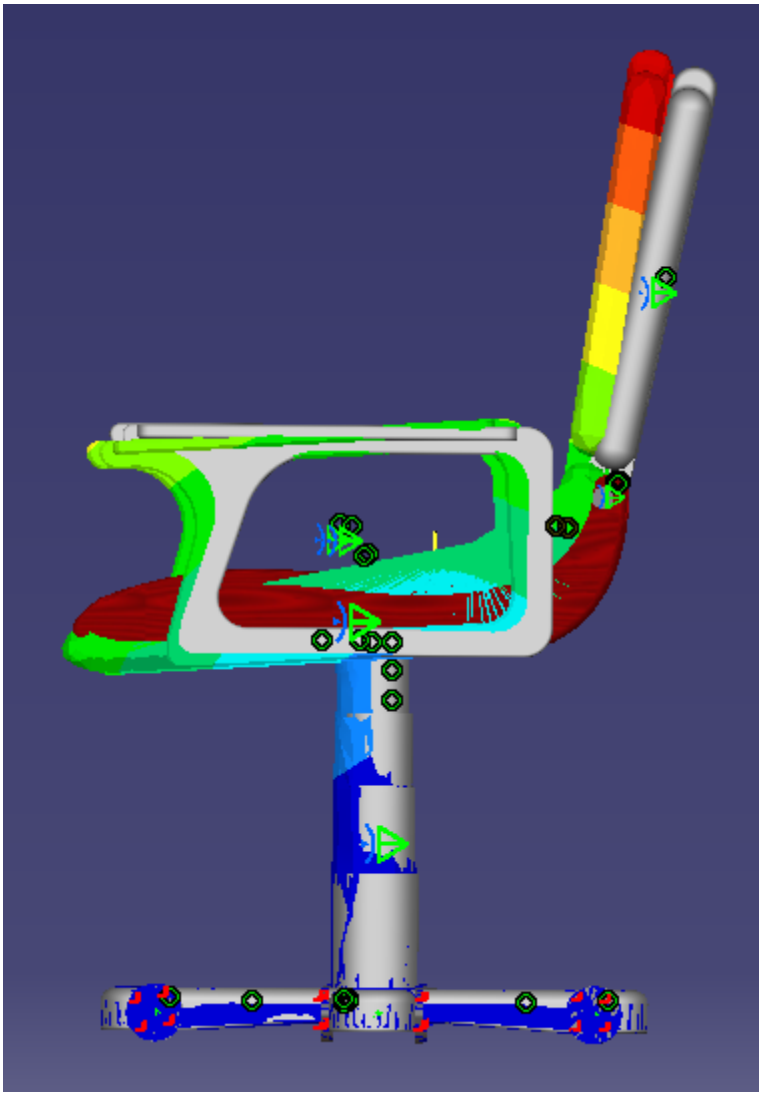

Displacement vs. Un-Displaced Side View

Innovative Chair Drawings

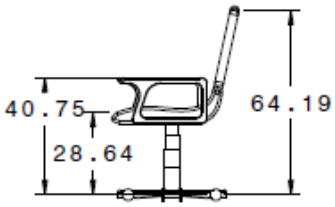

Side View
Scale: 1:40

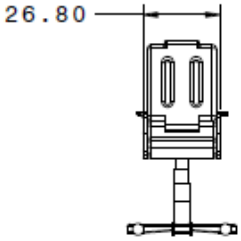

Front view
Scale: 1:40

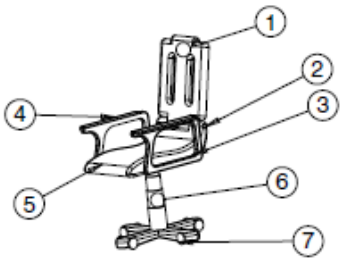

Isometric view
Scale: 1:40

Bill of Materials			
Number	Count	Part Name	Material
7	4	Wheel	Steel
6	1	Structure Base	Plastic
5	1	Chair Bottom	Teak
4	1	Arm Rest (R)	Plastic
3	1	Arm Rest (L)	Steel
2	1	Structure Base	Plastic
1	1	Chair Back	Plastic

EDSGN 497K	Ergo Chair
Penn State	Shane Szemanek
Scale 1:40	Units: Inches

Chair Assembly Drawing

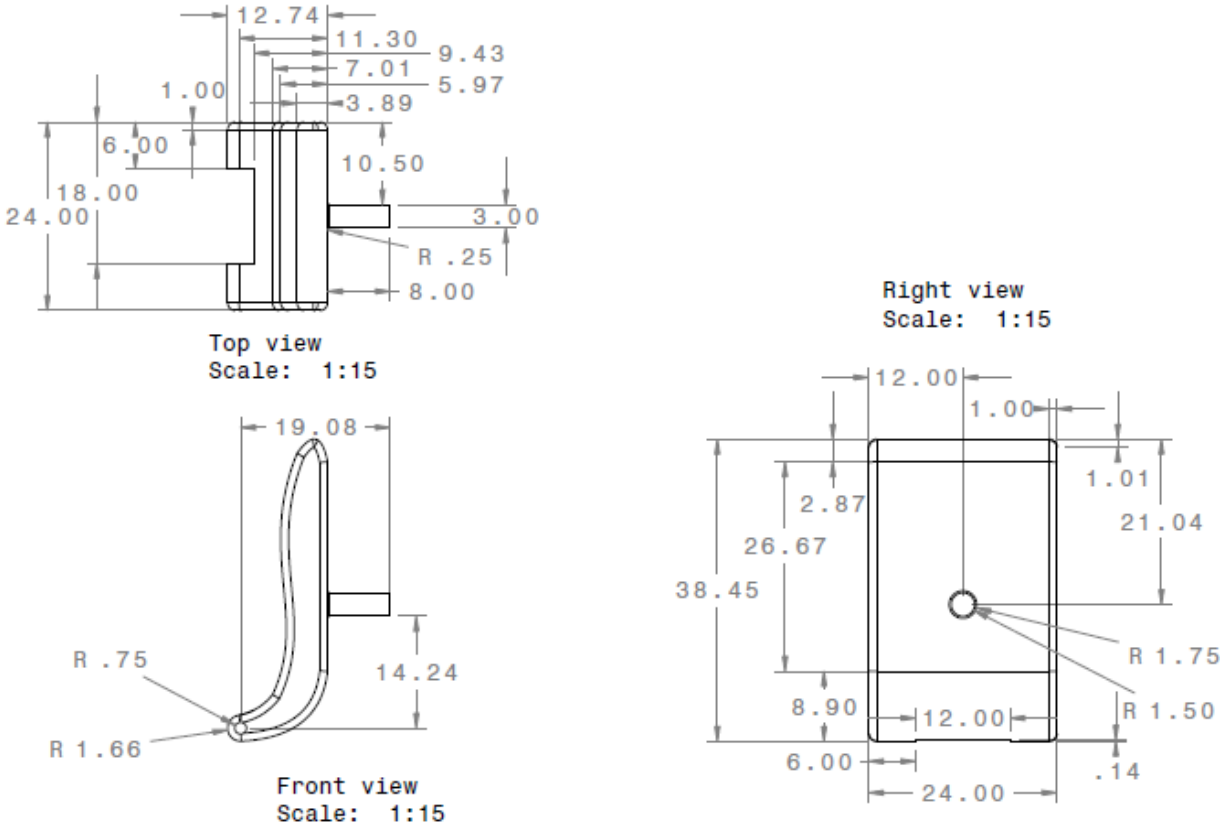

Chair Seat Bottom Drawing

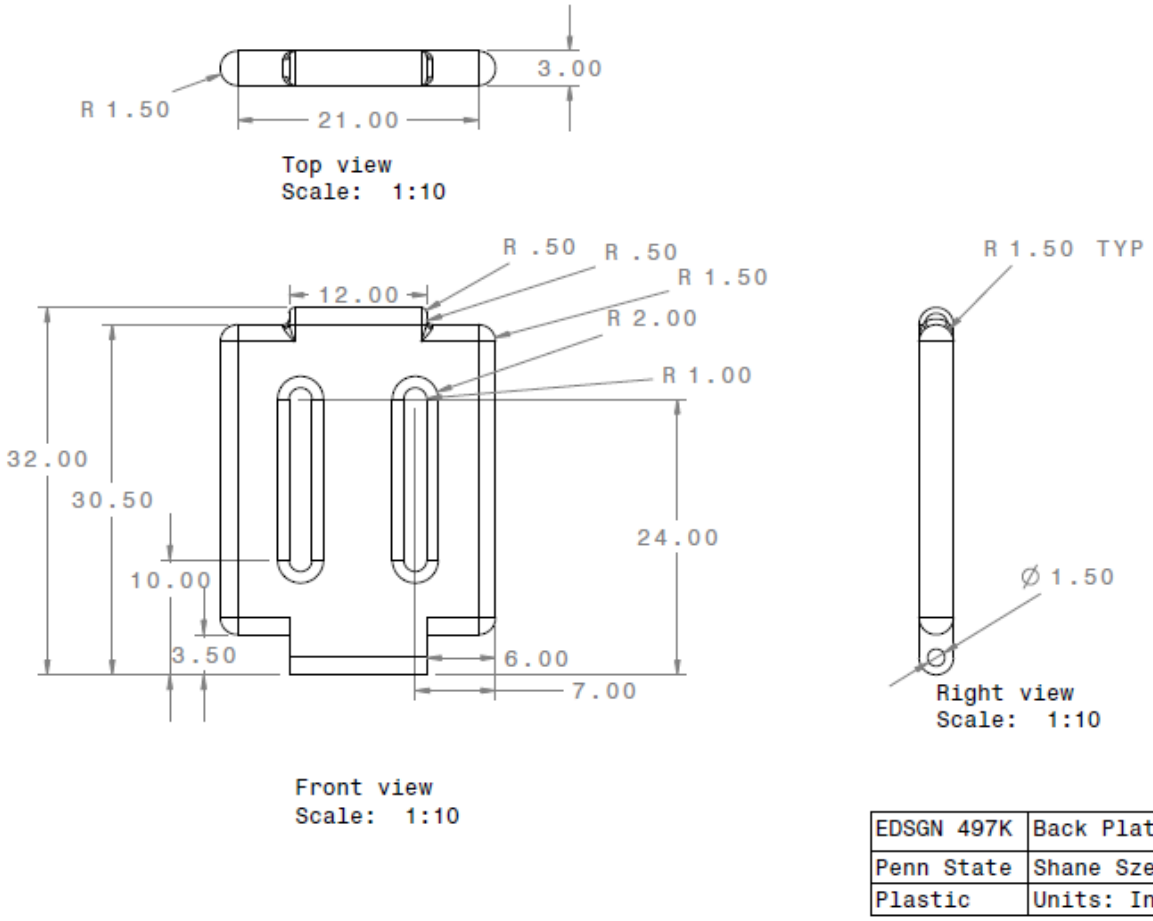

Chair Seat Back Drawing

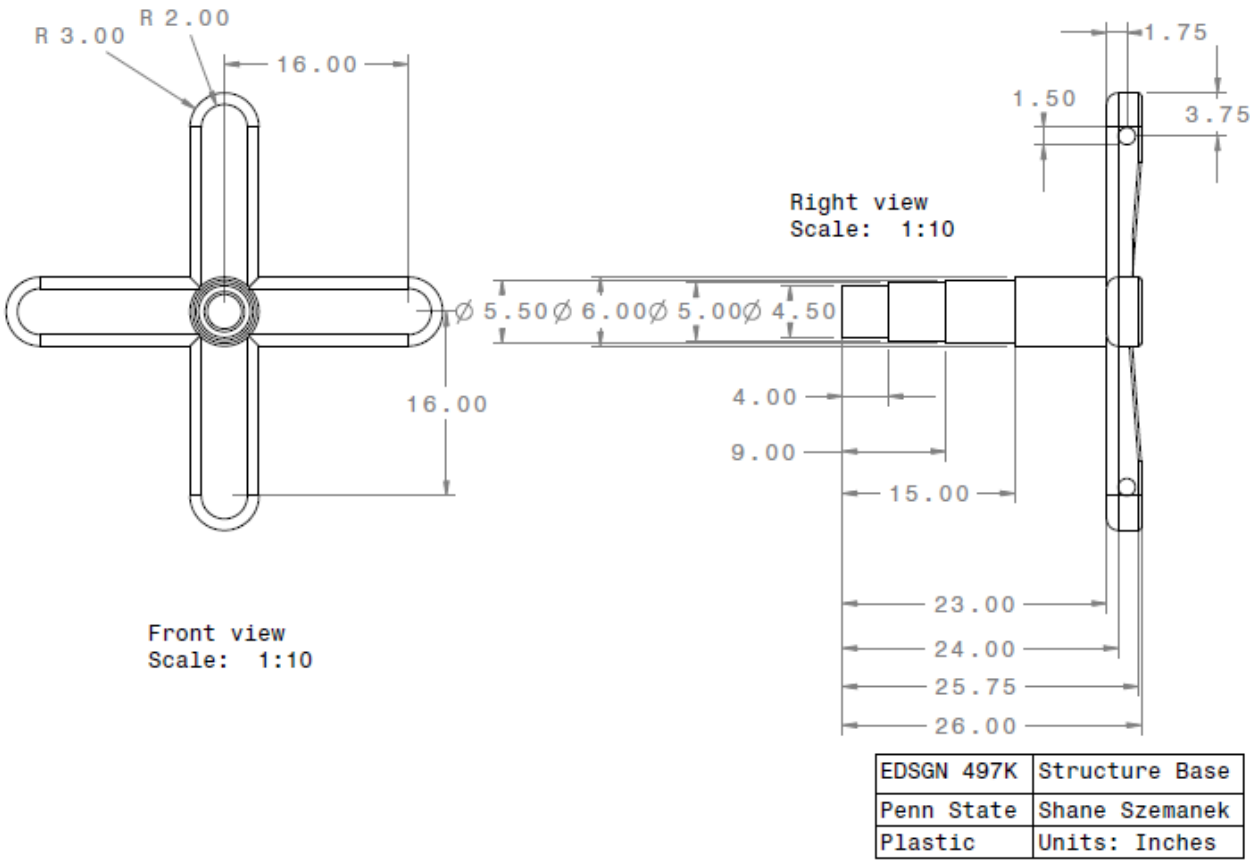

Chair Base Structure Drawing

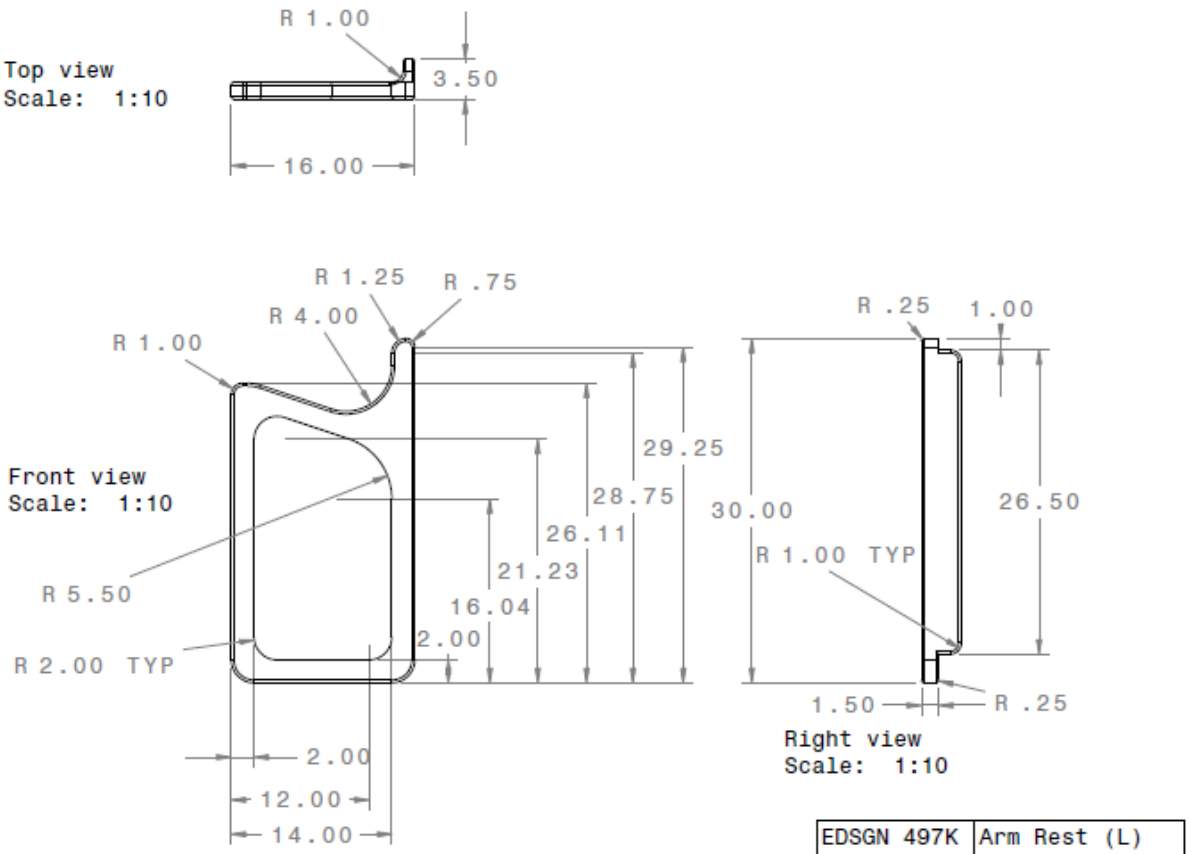

EDSGN 497K	Arm Rest (L)
Penn State	Shane Szemanek
Plastic	Units: Inches

Chair Left Arm Rest Drawing

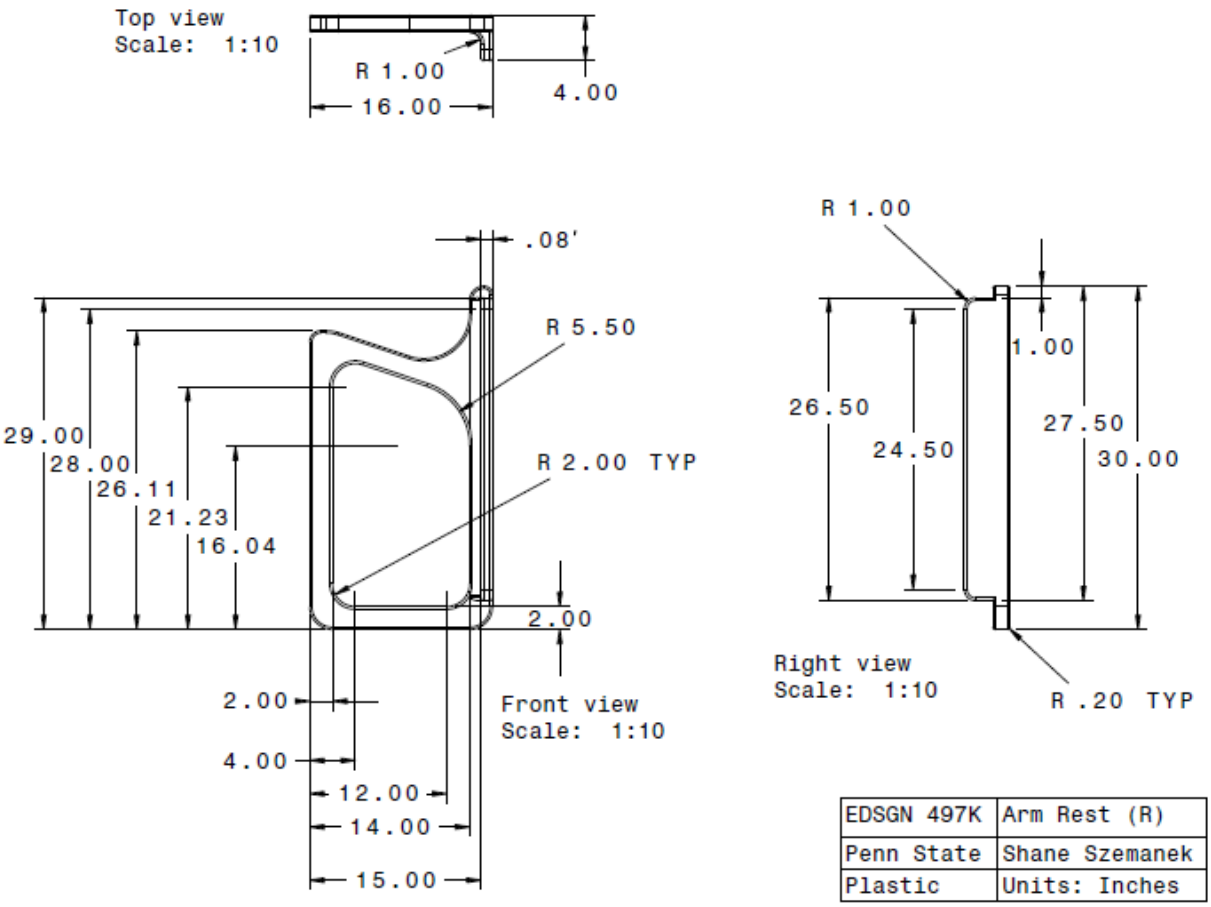

Chair Right Arm Rest Drawing

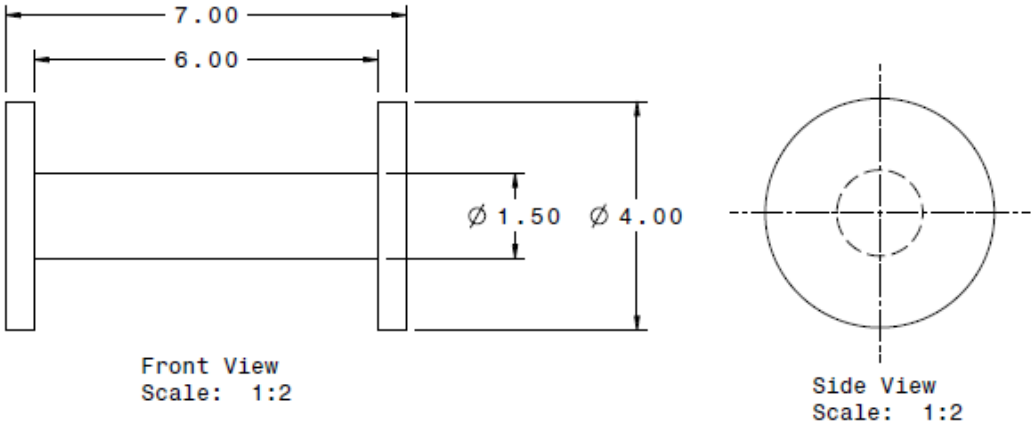

EDSGN 497K	Wheel
Penn State	Shane Szemanek
Steel	Units: Inches

Chair Wheel Drawing

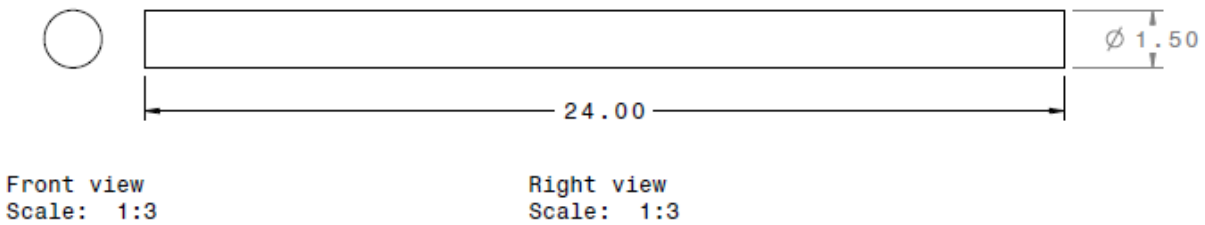

EDSGN 497K	Connection Rod
Penn State	Shane Szemanek
Steel	Units: Inches

Chair Connection Rod Drawing

Analysis1

MESH:

Entity	Size
Nodes	18400
Elements	65619

ELEMENT TYPE:

Connectivity	Statistics
TE4	65544 (99.89%)
SPIDER	50 (0.08%)
NSBAR	25 (0.04%)

ELEMENT QUALITY:

Criterion	Good	Poor	Bad	Worst	Average
Stretch	65542 (100.00%)	2 (0.00%)	0 (0.00%)	0.269	0.617
Aspect Ratio	59491 (90.76%)	6053 (9.24%)	0 (0.00%)	4.825	1.960

Materials.1

Material	Steel

Young's modulus	2.901e+007psi
Poisson's ratio	0.266
Density	490.684lb_ft3
Coefficient of thermal expansion	1.17e-005_Kdeg
Yield strength	36259.42psi

Material	Plastic
Young's modulus	319082.898psi
Poisson's ratio	0.38
Density	74.914lb_ft3
Coefficient of thermal expansion	6.84e-005_Kdeg
Yield strength	0psi

Material	Teak
Young's modulus	1.45e+006psi
Poisson's ratio	0
Density	40.016lb_ft3
Coefficient of thermal expansion	0_Kdeg
Yield strength	0psi

Static Case

Boundary Conditions

Figure 1

STRUCTURE Computation

Number of nodes	: 18400
Number of elements	: 65619
Number of D.O.F.	: 55350
Number of Contact relations	: 0
Number of Kinematic relations	: 11835
Number of coefficients	: 43548

Linear tetrahedron	: 65544
Translation rigid spider	: 50
Rigid spider	: 25

RESTRAINT Computation

Name: Restraints.1

Number of S.P.C : 2136

LOAD Computation

Name: Loads.1

Applied load resultant :

Fx = -3 . 000e+002 lbf
Fy = 2 . 192e-010 lbf
Fz = -1 . 500e-009 lbf
Mx = -3 . 883e-009 Nxm
My = -4 . 741e+002 Nxm
Mz = 4 . 000e+002 Nxm

STIFFNESS Computation

Number of lines	:	55350
Number of coefficients	:	983655
Number of blocks	:	2
Maximum number of coefficients per bloc	:	499990
Total matrix size	:	11 . 47 Mb

SINGULARITY Computation

Restraint: Restraints.1

Number of local singularities	:	0
Number of singularities in translation	:	0
Number of singularities in rotation	:	0
Generated constraint type	:	MPC

CONSTRAINT Computation

Restraint: Restraints.1

Number of constraints	:	13971
Number of coefficients	:	0
Number of factorized constraints	:	10160
Number of coefficients	:	23130
Number of deferred constraints	:	0

FACTORIZED Computation

Method	:	SPARSE
Number of factorized degrees	:	45190
Number of supernodes	:	2571
Number of overhead indices	:	160244
Number of coefficients	:	4210407
Maximum front width	:	321
Maximum front size	:	51681
Size of the factorized matrix (Mb)	:	32 . 1229
Number of blocks	:	5
Number of Mflops for factorization	:	5 . 498e+002
Number of Mflops for solve	:	1 . 707e+001
Minimum relative pivot	:	8 . 449e-007

Minimum and maximum pivot

Value	Dof	Node	x (in)	y (in)	z (in)
6.8162e+004	Ty	5221	-7.1894e-001	1.1916e+001	2.3032e+001
1.0396e+011	Tz	11469	3.8000e+001	2.6300e+001	9.1905e+000
5.0334e+004	Ry	18391	3.4052e+001	1.6385e+001	-5.7136e+000
1.9591e+009	Ry	18377	2.3000e+001	1.1790e+001	1.1538e+001

Minimum pivot

Value	Dof	Node	x (in)	y (in)	z (in)
1.1927e+005	Tz	18380	2.3000e+001	5.4146e+000	1.2199e+001

4.4840e+005	Ty	17542	3.8433e+001	-1.3528e+000	2.1172e+001
5.3082e+005	Ty	5190	-1.8140e+000	1.0608e+001	2.8135e+001
6.5612e+005	Tx	18391	3.4052e+001	1.6385e+001	-5.7136e+000
7.0845e+005	Tz	5221	-7.1894e-001	1.1916e+001	2.3032e+001
1.4709e+006	Ty	3323	-2.2690e+000	1.4550e+001	6.6032e+000
1.9245e+006	Ty	18318	3.8410e+001	-7.6107e-001	5.1858e+000
1.9515e+006	Ty	16788	3.6171e+001	-1.7000e+000	-3.5997e-001
1.9689e+006	Ty	5165	-9.4995e-001	1.1688e+001	1.5959e+001

Value	Dof	Node	x (in)	y (in)	z (in)
7.2341e+004	Ry	18359	-1.8315e+000	1.1845e+001	2.5332e+001
7.3991e+004	Rx	18380	2.3000e+001	5.4146e+000	1.2199e+001
4.2646e+005	Rz	18391	3.4052e+001	1.6385e+001	-5.7136e+000
6.9063e+005	Rz	18359	-1.8315e+000	1.1845e+001	2.5332e+001
2.2159e+006	Rx	18359	-1.8315e+000	1.1845e+001	2.5332e+001
1.9881e+007	Rz	18355	-1.8322e+000	1.9471e+001	2.4867e+000
2.3981e+007	Rx	18355	-1.8322e+000	1.9471e+001	2.4867e+000
3.3619e+007	Ry	18355	-1.8322e+000	1.9471e+001	2.4867e+000
7.8579e+007	Ry	18351	-1.8262e+000	-3.4407e+000	1.0180e+001

Translational pivot distribution

Value	Percentage
10.E4 --> 10.E5	2.2135e-003
10.E5 --> 10.E6	1.1068e-002
10.E6 --> 10.E7	1.5052e-001
10.E7 --> 10.E8	5.7454e+001

10.E8 --> 10.E9	2.9681e+001
10.E9 --> 10.E10	1.2449e+001
10.E10 --> 10.E11	2.4791e-001
10.E11 --> 10.E12	4.4270e-003

Rotational pivot distribution

Value	Percentage
10.E4 --> 10.E5	2.3077e+001
10.E5 --> 10.E6	1.5385e+001
10.E6 --> 10.E7	7.6923e+000
10.E7 --> 10.E8	4.6154e+001
10.E8 --> 10.E9	0.0000e+000
10.E9 --> 10.E10	7.6923e+000

DIRECT METHOD Computation

Name: Static Case Solution.1

Restraint: Restraints.1

Load: Loads.1

Strain Energy : 2.733e-001 J

Equilibrium

Components	Applied Forces	Reactions	Residual	Relative Magnitude Error
Fx (lbf)	-3.0000e+002	3.0000e+002	-4.1044e-008	1.0475e-010

Fy (lbf)	2.1918e-010	-4.8365e-010	-2.6446e-010	6.7492e-013
Fz (lbf)	-1.4999e-009	-6.5470e-008	-6.6970e-008	1.7091e-010
Mx (Nxm)	-3.8830e-009	-6.4481e-008	-6.8364e-008	1.0748e-010
My (Nxm)	-4.7408e+002	4.7408e+002	2.6784e-007	4.2109e-010
Mz (Nxm)	3.9997e+002	-3.9997e+002	7.2369e-008	1.1377e-010

Static Case Solution.1 - Deformed mesh.2

Figure 2

On deformed mesh ---- On boundary ---- Over all the model

Static Case Solution.1 - Von Mises stress (nodal values).2

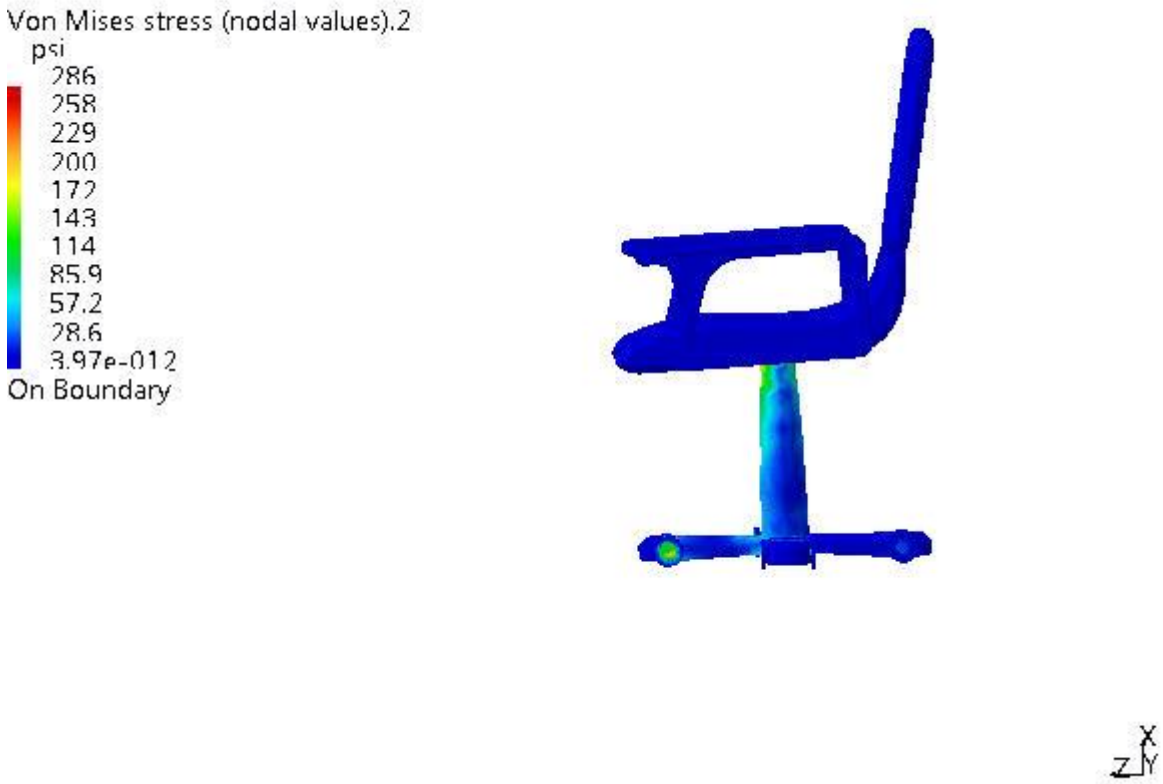

Figure 3

1D elements: : Components: : All

3D elements: : Components: : All

On deformed mesh ---- On boundary ---- Over all the model

Global Sensors

Sensor Name	Sensor Value
Energy	0.273J
Global Error Rate (%)	41.65827179