Boeing VTOL Final Report

VTOL Quadcopter Tennis Ball Challenge

December 23, 2013

Shane Szemanek
Jinwen (Candice) Zhu
Alysa Darrenkamp
Michael Severino

Intellectual Property Rights Agreement: NO

Non-Disclosure Agreement: NO

Executive Summary

The current state of the world has required a higher demand on Unmanned Aerial Vehicles (UAV's) and increasing their capabilities. Boeing came to the Pennsylvania State University with a remote controlled quadcopter and a mission. That mission was to design, build, and integrate a contraption that allows a quadcopter to move tennis balls from one location into a bucket with in a fifteen minute time frame. Boeing tasked three teams with this project and each one was asked to design a quad-copter that would beat the other two. The teams were given a $1000 budget and fifteen weeks to deliver working prototypes for the flight competition.

Throughout the concept generation process it was evident to our team, Team 3: Hella-Kitty, that multiple batteries would be needed for the competition as one battery would not last the fifteen minute time frame.

The benchmarking and concept selection process has lead team Hella-Kitty to pursue two designs. The primary design will be one similar to Concept A, the lateral moving cage, and the secondary design will be Concept K, the multi-prong device.

Since the team has not been able to fly the quadcopter yet, they haven't been able to visualize its control system and how accurate it will be. However, through the concept development process the team was able to successfully analyze both the primary and secondary designs and concluded that a modified version of Concept A would best address the task at hand.

The final design is based on the team's interpretation of the parameters of the competition: an emergency situation where a quadcopter will be used to transport supplies from a secure location to an area in need. Team Hella-Kitty decided that it would be best to carry as much of a payload as possible without having the UAV refuel, or in this case change batteries. This would be a waste of time in a dire situation. In order to carry a larger payload, larger motors and new propellers would be necessary, which in turns meant the UAV needed more batteries.

The final design consists of two laterally moving doors that are each attached to a pull style solenoid. The doors would be in a closed position, while non-energized. This allows for minimal power usage to transport the payload because the only time the solenoids would be active, would be to open the doors while capturing the payload.

In order to achieve a greater payload capacity the team shortened the landing gear and will relieve the quadcopter of unnecessary material while maintaining strength. The team was also presented with the task of retrieving hard to reach payloads. This will be addressed with a singular modified landing gear strut that will integrate a ball extractor in the shape of a hook. This will allow the quadcopter to retrieve and reposition balls in any position given the project parameters.

Table of Contents

Executive Summary ……2
1.0 Introduction ……5
1.1 Background
1.2 Initial Problem Statement
1.3 Objective
2.0 Customer Needs Assessment……6
2.1 Gathering Customer Input
2.2 Weighting of Customer Needs
3.0 External Search……8
3.1 Patents
3.2 Existing Products
4.0 Engineering Specifications……11
4.1 Establishing Target Specifications
4.2 Relating Specifications to Customer Needs
5.0 Concept Generation and Selection……12
5.1 Problem Clarification
5.2 Concept Generation
5.3 Concept Selection
6.0 System Level Design……26
7.0 Special Topics……27
7.1 Preliminary Economic Analysis
7.2 Project Management
7.3 Risk Plan and Safety
7.4 Ethics Statement
7.5 Environmental Statement
7.6 Communication and Coordination with Sponsor
8.0 Detailed Design……32
8.A Modifications to Statement of Work
8.1 Manufacturing Process Plan
8.2 Analysis
8.3 Material and Material Selection
8.4 Component and Component Selection Process
8.5 Computer Aided Design
8.6 Test Procedure
8.7 Economic Analysis
9.0 Final Discussion……51
9.0.0 Modifications to Statement of Work and Detailed Design
9.1 Construction Process
9.2 Test Results and Discussion

10.0 Conclusions and Recommendations.....56
10.1 Competition Summary
10.2 Project Conclusion and Recommendations
11.0 Self Assessment (Design Criteria Satisfaction).....58
11.1 Customer Needs Assessment
11.2 Global and Societal Needs Assessment
12.0 References.....60
Appendices
Appendix A: Gantt Chart…….....…61
Appendix B: Analysis……..…62
Appendix C: Detailed CAD Drawings……..……72
Appendix D: Budget Allocation……81
Appendix E: Bill of Materials……...…81
Appendix F: Electronic Systems Flow Chart……..…83
Appendix G: Quadcopter Display and Competition Corral…..……...85
Appendix H: Resumes……...86

1.0 Introduction

1.1 Background

Unmanned Arial Vehicles' and quadcopters have been around for many years. The Boeing Company has asked the three teams associated with the project to expand upon that technology. This project is intended to design and build a device capable of performing a series of tasks set forth by the customer, The Boeing Company. Efficiently flying payloads from one point to another is a serious engineering problem, and the team needs to implement this on a small scale. The ultimate goal of any cargo delivery system is to transport as much cargo, as quickly as possible, and as safely as possible. The team will aim to build a quadcopter which will be able to deliver as much cargo as possible in the allotted time and within the budget.

1.2 Problem Statement

The Boeing Company wants the teams to design and build a quadcopter capable of transporting cargo multiple times from one spot to another. The cargo will be tennis balls, of varying weights, and the quadcopter will need to transport as many balls as possible within fifteen minutes. The teams will need to extend the flight time of the copter to fifteen minutes, and we will need to provide a mechanism for picking up and dropping balls. The copter must be capable of flight with at least the weight of one tennis ball, and this must be factored into our flight time. The final design will be as safe and simple as possible. The quadcopter will, with the assistance of a pilot, be able to pick up balls of varying weights, fly them to a drop off point, release the balls, and continue this process for fifteen minutes.

1.3 Objectives

For this project Boeing has asked team Hella-Kitty to develop a cargo system to be integrated with a quadcopter. The cargo system is required to pick up tennis balls of different weight. The teams will participate in a competition upon completion of the project to determine which team has the best design. The competition is organized as follows: the quadcopter will retrieve tennis balls from one location, release them at a location fifty feet away, and repeat for fifteen minutes. There will be two drop off locations for the tennis balls. The first location will be a large diameter bucket with a diameter of approximately three feet and will sit three to four feet high. The second location will have a diameter not much larger than the diameter of a tennis ball. The overall challenge is to see which helicopter team can transport the most and largest variety of tennis balls and to the two locations. Each drop off location is worth different points, with the smaller location being worth more. Additionally, each type of tennis ball is worth a different amount of points, the heavier the tennis ball, the more points that are associated with it.

Limitations:

- The quadcopter is required to fly for about 15 minutes.
- The batteries only last 7min.
- The quadcopter will have to lift weighted tennis balls (balls will be injected with material in order to weigh as much as possible).
- The quadcopter should weigh less than 7 pounds.

2.0 Customer Needs Assessment

2.1 Gathering Customer Input

This project is designed as a competition that requires team to build an air vehicle that performs certain functions. The customer needs are analyzed during the web-conferences with Boeing within the first three weeks. Due to this competition-based project, only basic requirements were specified.

After researching patents and communicating with Boeing, the following customer needs are stated. A pick-up/drop-off system has to be built based on a vertical lift flight platform. The air vehicle can only be powered by the same type of batteries and needs to be able to fly for at least fifteen minutes. The craft has to be able to complete the mission of picking up tennis balls with various weights, flying over fifty feet gap and dropping off the balls in a trash can. The design is limited by a one thousand dollar budget.

The ultimate goal of this competition is to pick up as many balls as possible within a limited time. To achieve the goal, a high efficiency, low power consumption and big payload capability design is favored.

2.2 Weighting of Customer Needs

Determining the weights for each customer need are as follows: 1 being of equal importance up to 5 being the most important. Through the concept generation stages it became evident which needs were more important than others, this was how their importance was determined.

Table 1: Hierarchy of Customer Needs

No.	Need	Importance
1	Pick up 1 or more tennis balls	4
2	Quadcoper	1
3	Balls cannot be Lost (Ball Security)	3
4	Able to fly for 15 minutes	1
5	Able to carry a payload	1
6	Able to accurately release payload	4
7	Able to pick up balls of multiple weights	3
8	Utilize composites to decrease weight	2
9	Utilize batteries of similar type for flight	1
10	Can't exceed $1000 budget	1
11	Technology Integration	1
12	Score the most amount of points possible	1
13	Quick Load/Release Speed	3
14	Easy to Manufacture	4
15	Easy to Operate	5

Once this had been completed the team was more readily able associate weights to the customer needs with a hierarchy rank of two or above. The Weighting of the customer needs are illustrated in the table below.

Table 2: Analytical Hierarchy Process Pairwise Comparison Chart

	Pick up More than One Ball	Ease of Manufacturing	Ball Security	Ease of Operation	Accurately Releases Payload	Pick Up Balls of Multiple Weight	Utilize Composites to Decrease Weight	Load/Release Speed	Total	Weight
Pick up More than One Ball	**1.00**	1.00	1.33	0.80	1.00	1.33	2.00	1.33	9.80	0.1429
Ease of Manufacturing	1.00	**1.00**	1.33	0.80	1.00	1.33	2.00	1.33	9.80	0.1429
Ball Security	0.75	0.75	**1.00**	0.60	0.75	1.00	1.50	1.00	7.35	0.1071
Ease of Operation	1.25	1.25	1.67	**1.00**	1.25	1.67	2.50	1.67	12.25	0.1786
Accurately Releases Payload	1.00	1.00	1.33	0.80	**1.00**	1.33	2.00	1.33	9.80	0.1429
Pick Up Balls of Multiple Weight	0.75	0.75	1.00	0.60	0.75	**1.00**	1.50	1.00	7.35	0.1071
Utilize Composites to Decrease Weight	0.50	0.50	0.67	0.40	0.50	0.67	**1.00**	0.67	4.90	0.0714
Load/Release Speed	0.75	0.75	1.00	0.60	0.75	1.00	1.50	**1.00**	7.35	0.1071
								Total	**68.60**	**1**

3.0 External Search

3.1 Patent search

While developing solution for the helicopter lift, we researched what patents existed for helicopter (small and full sized), existing types of lifts for helicopter and other engineering/ construction projects, and the patents for existing scoop and grabbing mechanisms.

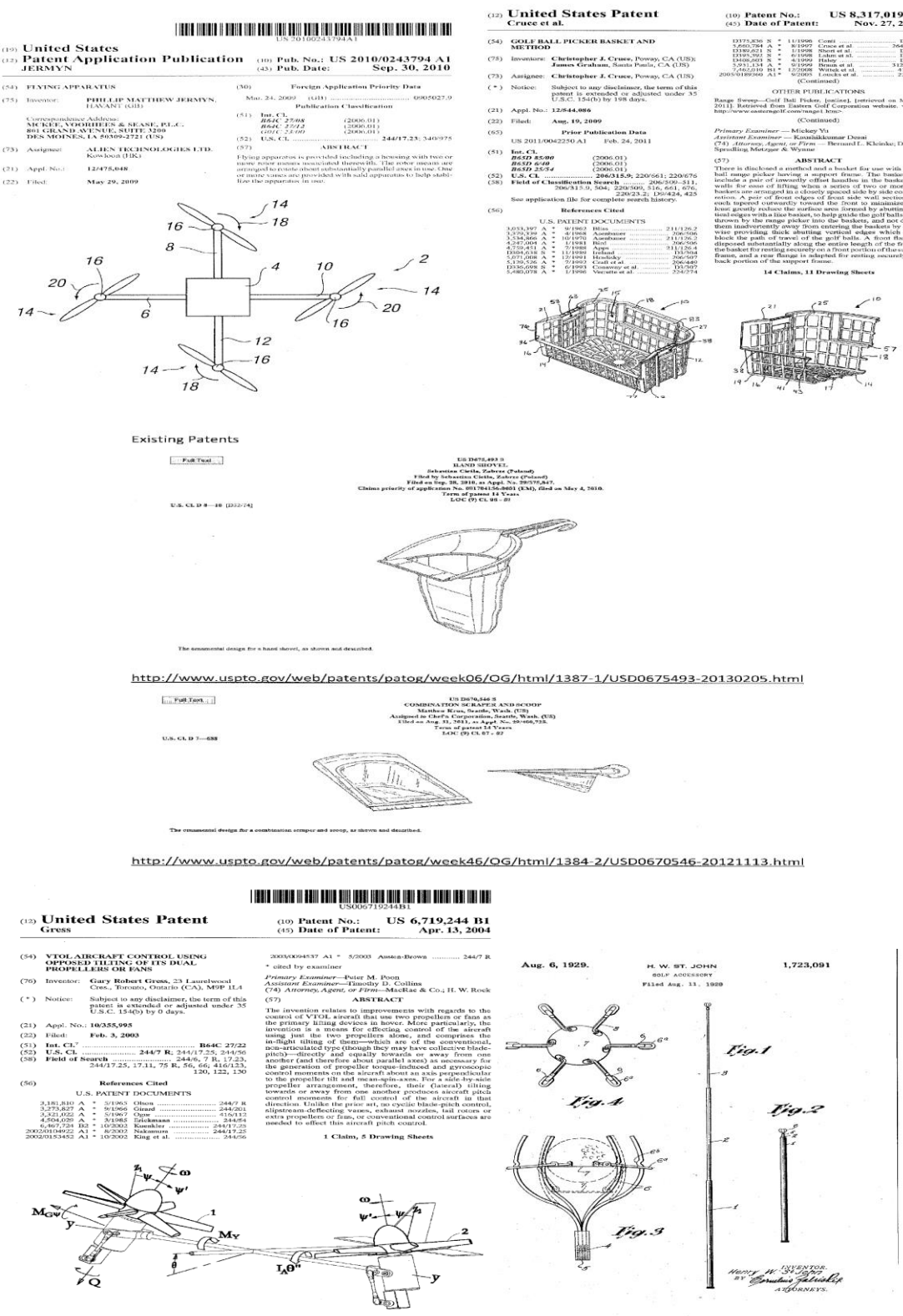

Figure 1: Examples of Different Patents Researched for the Quadcopter

3.2 Benchmarking

As of now, a helicopters ability to transport large under-load is based on ropes, chains and nets that have to be attached by hand. Helicopters do not have the ability to hover or land over their desired package and pick it up to transport it. Human or ground machinery is needed to attach the desired load.

Figure 2: Helicopter Material Transport by Human Installed Nets [1]

Figure 3: A Standard Vehical Transport Instalment Under a Helicopter [2]

4.0 Engineering Specifications

4.1 Establishing Target Specifications

Team Hella-Kitty used the current customer needs from Boeing and the performance expectations of the quad-copter to establish target specifications. The metrics for the quad-copter are illustrated in the following table. Given the requirements for the project and extensive research the team believes that regardless of future changes in the scope of the project that these metrics will remain applicable.

Table 3: Target Specifications

No.	Metric	Units	Value
1	Flight Time	Min.	15
2	Tennis Ball Quantity	Count	> or = 1
3	Contraption Volume	in^3	< 576
4	Will not destroy payload	-	Y
5	Budget	$	1000
6	Flight Control Motors	Count	4
7	Ardupilot	-	Y
8	Simple Mechanical System	-	Y
9	Batteries	Count	> or = 1
10	High Lift to Weight Ratio	g	>1:1

*Once additional calculations and project planning have been completed with Boeing the Target Specifications are subject to change.

4.2 Relationship of Target Specifications to Customer Needs

A matrix containing the target specifications versus the customer needs was compiled allowing for team Hella-Kitty to improve their understanding of needs that each metric satisfies. This is shown in the following table.

Table 4: Needs Metrics

Metric	Flight Time	Tennis Ball Quantity	Contraption Volume	Will not destroy payload	Budget	Flight Control Motors	Ardupilot	Simple Mechanical System	Batteries	High Lift to Weight Ratio
Need										
Pick up 1 or more tennis balls		X	X					X		X
Quadcoper						X	X			
Balls cannot be Lost				X				X		
Able to fly for 15 minutes	X									
Able to carry a payload		X						X	X	X
Able to accurately release payload			X	X				X		X
Able to pick up balls of multiple weights			X						X	X
Utilize composites to decrease weight			X					X		X
Utilize batteries of similar type for flight	X					X	X	X	X	
Can't exceed $1000 budget					X			X	X	
Technology Integration			X		X			X	X	X
Score the most amount of points possible	X	X	X	X						X

5.0 Concept Generation and Selection

Team Hella-Kitty immediately began work upon concept generation through patent and external research. Through the use of online calculators, hand calculations, and brainstorming the team was able to come up with over a dozen concepts. These concepts were focused on being able to retrieve multiple balls off varying weights and organization without their destruction and deliver them to a destination fifty feet away. These concepts were required to be light weight, simple in their operation, and if possible utilize composites. The Boeing sponsors took the time to visit Penn State and work with the team, teaching them to fly the quadcopter and analyze the top concepts.

5.1 Problem Clarification

A black box model was constructed to determine the main objectives for the concepts to be developed. This was followed by a functional decomposition of sub-functions. Both of which are depicted below. The system needed to accept electrical energy and turn it into a signal which would be sent to the receiver on the quadcopter, which would tell the batteries to apply electricity to the motors. Two sets of motors would convert the electrical energy into rotational energy. The first set would apply the rotational energy to the propellers which would in turn generate the lift needed to transport the tennis balls. The second set would be a set of solenoids, using energy to apply a linear force to the contraption utilized to capture and release the tennis balls.

Inputs		**Outputs**
Electrical Energy Tennis Ball(s)	Transmitter, Quadcopter, and Contraption	Delivered Tennis Ball(s)

Figure 4: Black Box Model

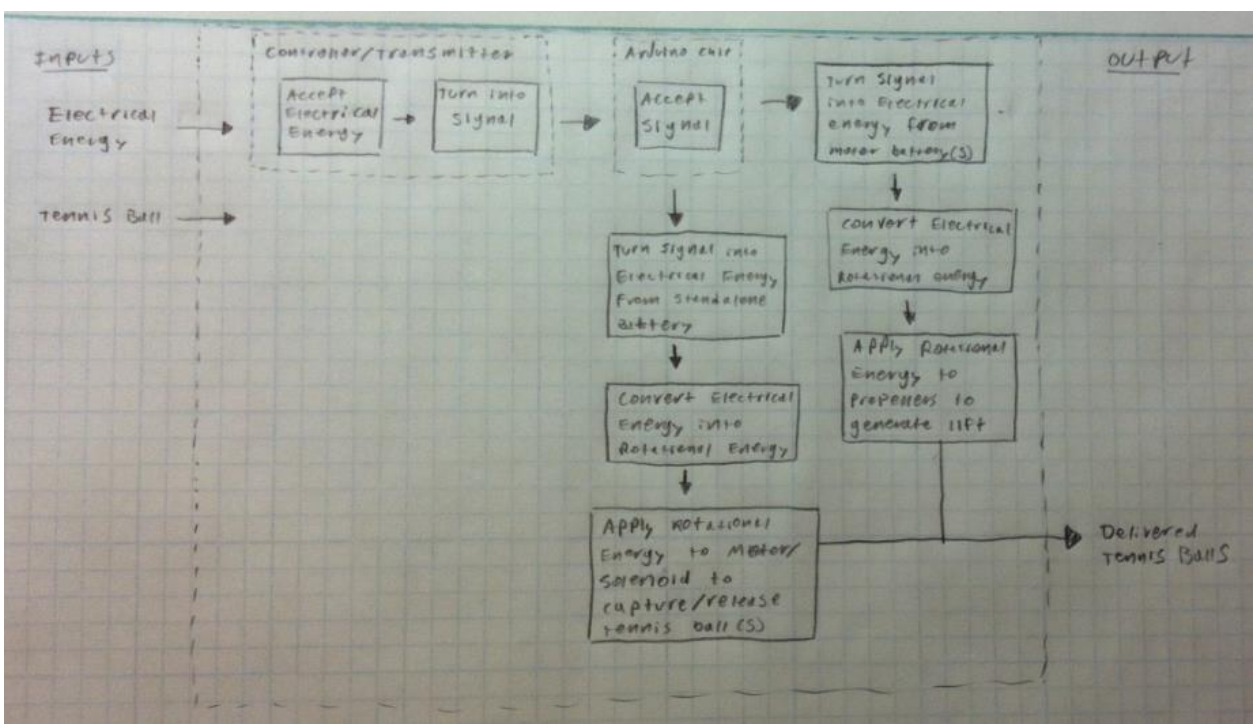

Figure 5: Functional Decomposition of Sub Requirements

5.2 Concept Generation

The concept generation process was started immediately after the project was designed. The project parameters were still rather broad at this juncture so the team decided to come up with as many ideas as they could to pick up the tennis balls. The team had to keep in mind that they didn't know the organization of the balls in the corral or the weighting of the balls. Additionally the team had to make note of the fact that there would be two drop off zones of different radii. The first would have a large radius while the second would have a radius that isn't much larger than the radius of a tennis ball. The following concepts were generated:

Concept A: Lateral Moving Cage

The lateral moving cage is a device composed of two cages that come together via a motor and gear system in a lateral motion. This contraption will allow team Hella-Kitty to pick up multiple balls while keeping them contained in a vessel. The two cages will be connected on the same gear, which allows for only one motor. The top part of the gear system will allow the motion of one cage while the bottom will support the motion of its partner. This system will sustain simultaneous motion.

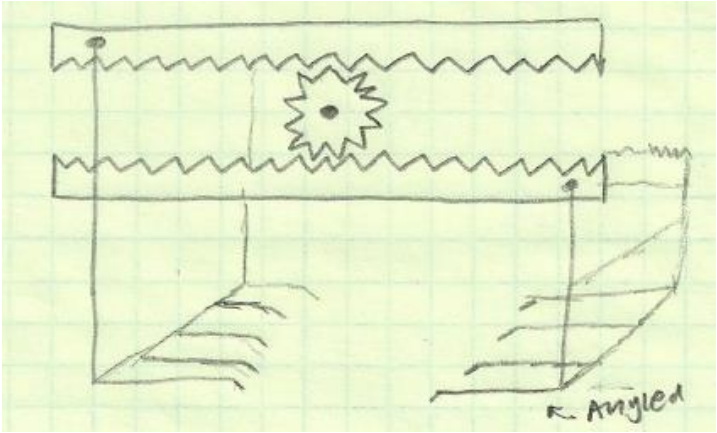

Figure 6: Concept A

Concept B: Bombay Door Cage

Instead of a cage comprised of two parts as in Concept A, the bomb-bay door cage is a fully constructed cage. To pick up the balls the bottom two doors will open and then shut on the balls. This will utilize two motors and two gear systems.

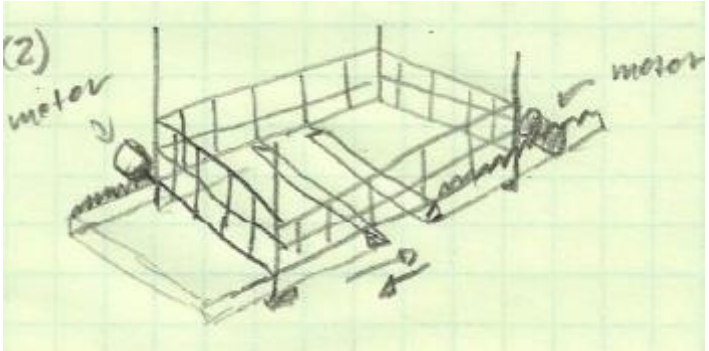

Figure 7: Concept B

Concept C: Single Ball Suction Cup

This concept will utilize a vacuum to suck one tennis ball into the containment hemisphere. It will require perfect sealing to hold the tennis ball in place. The vacuum will require an impeller and a motor.

Figure 8: Concept C

Concept D: Angled Moving Cage

Similar to the lateral moving cage, this is a two cage system that will allow the pilot to pick up multiple tennis balls at once. This idea can be modified to a variety of angles and use a variety of gear systems. This allows the excess balls to be pushed out of the way so that they will not interfere with the landing of the quadcopter and the desired tennis balls to be lifted. It can also be composed of very lightweight materials.

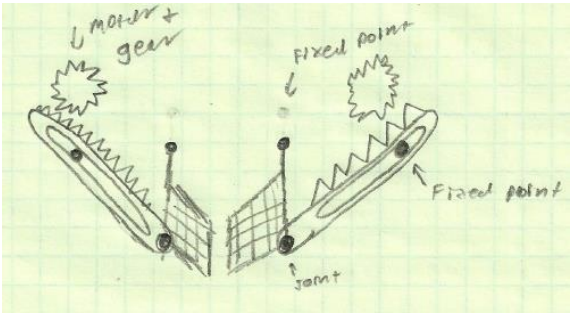

Figure 9: Concept D

Concept E: Three Prong System

This concept would allow for one ball to be securely retrieved using three prongs that would come together to gather the tennis ball and separate to release it. It may require more than one motor and could require an elaborate system.

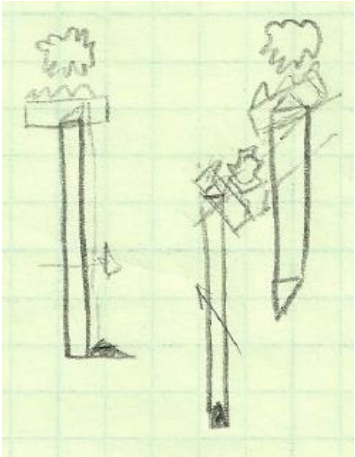

Figure 10: Concept E

Concept F: Technology Integration

The team decided to use technology integration as one concept. They proposed that laser or sonar range finders could be used to open and close whatever system they chose to retrieve the tennis balls. They also proposed the use of a laser trip wire that would turn on the contraption once the beam was broken, signaling that it was on top of a ball. Finally an autopilot system was proposed to make flight more efficient.

Concept G: Spring Loaded Prong System (head scratcher)

This is similar to the three prong concept but requires a motor or solenoid to open the pongs to release the cargo. The end of the prongs would be angled so that the curvature of the ball and the weight of the copter coming down on it would separate the prongs just enough that they would allow the tennis ball entry to the cargo bay.

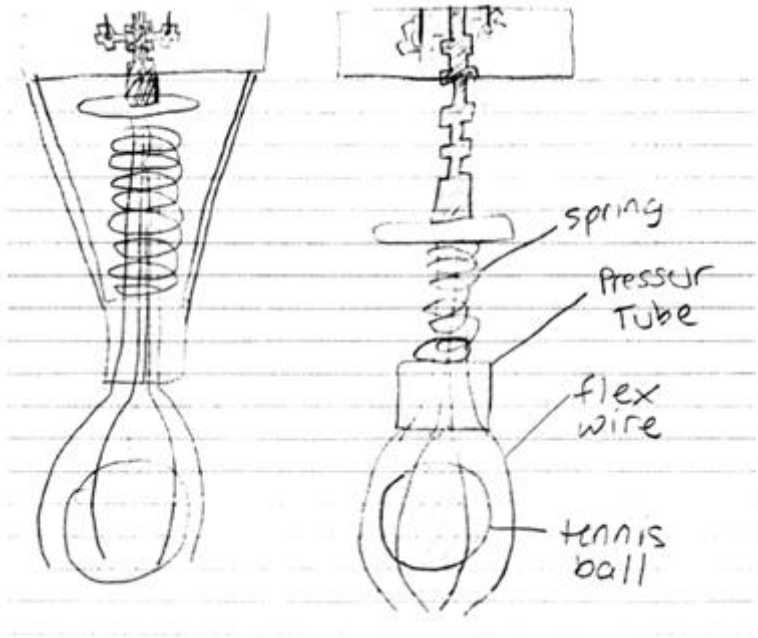

Figure 11: Concept G

Concept H: Hanging Puncture Device

This device would hang down below the quadcopter during flight and puncture the desired tennis ball and then carry it to the drop zones.

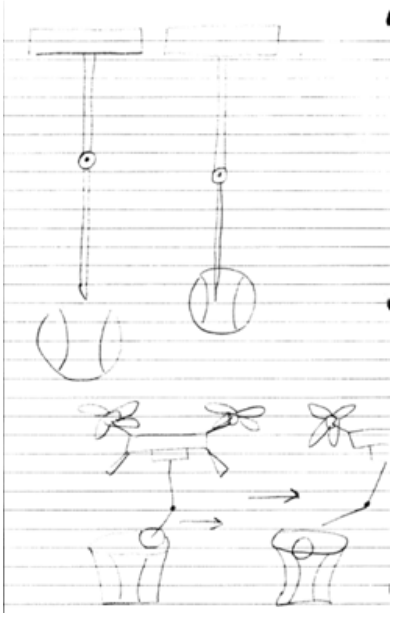

Figure 12: Concept H

Concept I: Hanging Velcro Belt System (or disk)

A belt of Velcro would hang beneath the quadcopter, upon landing it would separate and stick to tennis balls. Upon reaching the drop zone the belt system would activate. Once a ball reaches the top of the system it would be separated and allowed to drop.

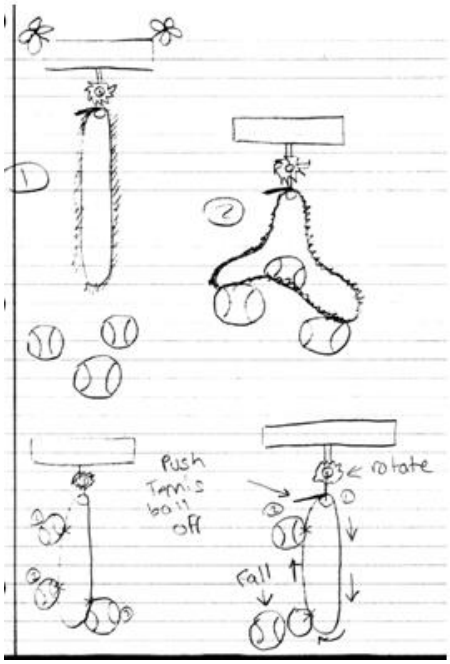

Figure 13: Concept I.1

The disk version is very similar except that the tennis balls would be separated by a revolving blade or a widely spaced sheet of chicken wire.

Figure 14: Concept I.2

Concept J: Hole in Belt System

This design is composed of a belt with a hole in it large enough to fit a tennis ball or two. The open portion of the belt would allow access to a containment vessel. Once the quadcopter was over top of a tennis ball the open part of the belt would align with the entrance of the vessel. After the vessel is surrounding the ball the belt would move and close off the vessel thus capturing the tennis ball.

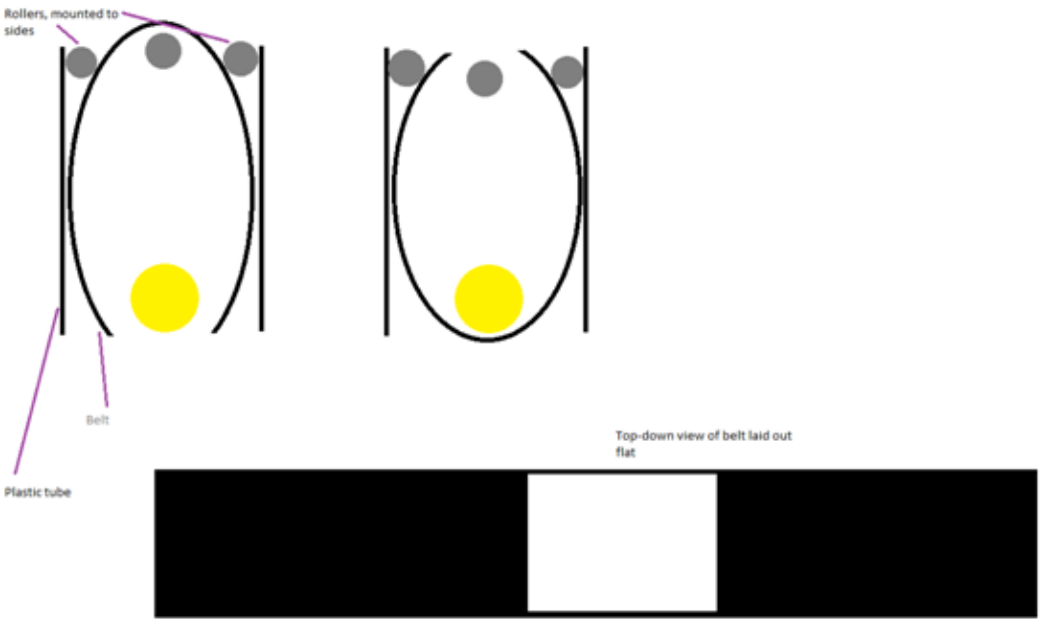

Figure 15: Concept J

Concept K: Solenoid/Magnet Multi Prong Claw (head scratcher)

Please reference concept G. Same concept however instead of it being spring loaded it would utilize a solenoid to control the movement of the prongs.

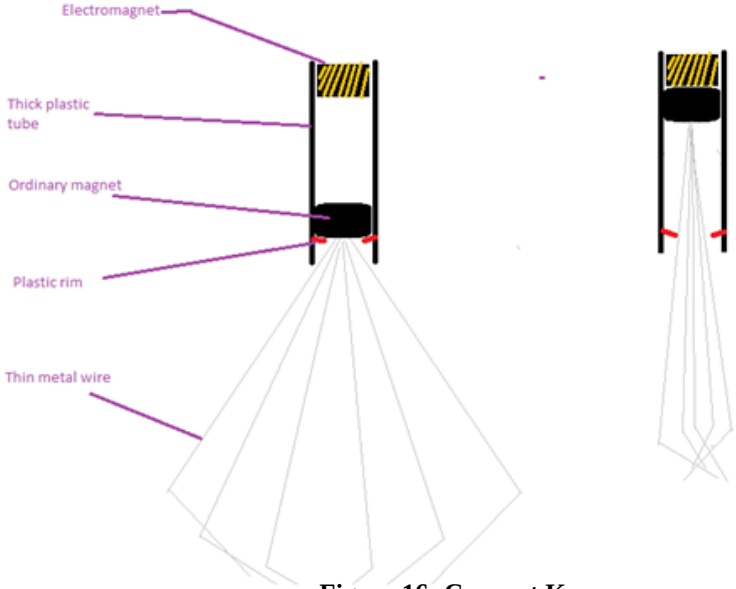

Figure 16: Concept K

Concept L: Sphincter Cylinder System

This system would be constructed from a cylinder or parts of PVC or wire to make the shape of a cylinder. On the end of the cylinder there would be a foam or rubber

contraption that would be used to contain the tennis balls. The quadcopter would hover over a tennis ball(s) and drop down on them. The minimal force would be enough to pass through the rubber/foam on the end of the cylinder to release it. The ball would be released via a solenoid that would push the ball out or a motor that would enlarge the hole via separation of the walls.

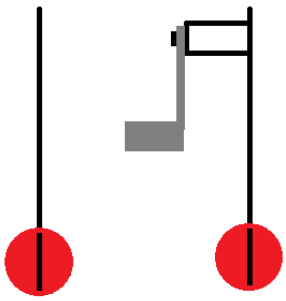

Figure 17: Concept L

Concept M: Multi-ball vacuum system

This concept will utilize a vacuum to gather the multiple balls and either trap them in a container before they reach the impeller or use the impeller to push them into a container. This container would operate like a Bombay door and release the balls overtop the drop zones.

Figure 18: Concept M

Concept N: Moving Leg System

This system would be composed of four legs. Each leg would be connected to a motor and would be drawn in to pick up a tennis ball and drawn out to release it.

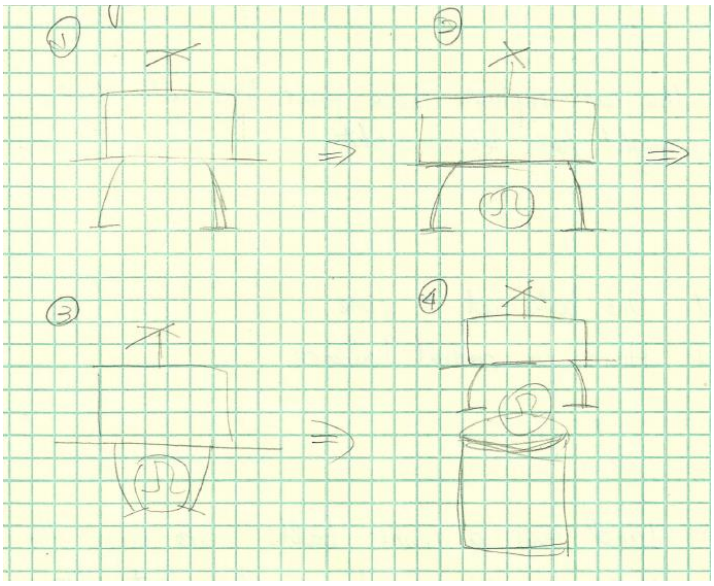

Figure 19: Concept N

Concept O: Multi-ball Kicker System

This concept would contain a kicking leg that would kick balls up a channel and into a containment vessel. The bed of this vessel would be angled so that the side of the wall the balls would gravitate towards would have to be released to release the balls into the drop zone.

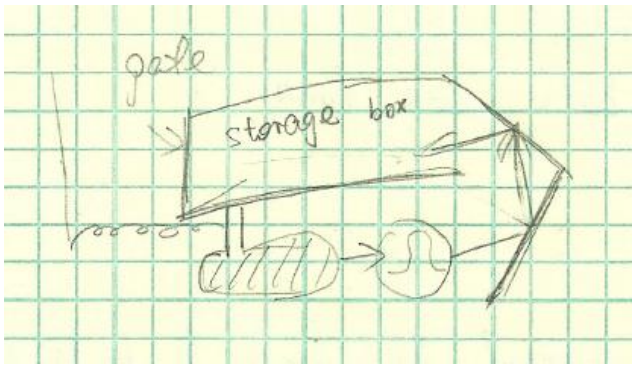

Figure 20: Concept O

Concept P: Hanging Net System

Once the quadcopter has landed a scooper that is operated via a motor would push tennis balls into a net. Once the quadcopter reaches the drop zone the end of the net would be hoisted to release the balls.

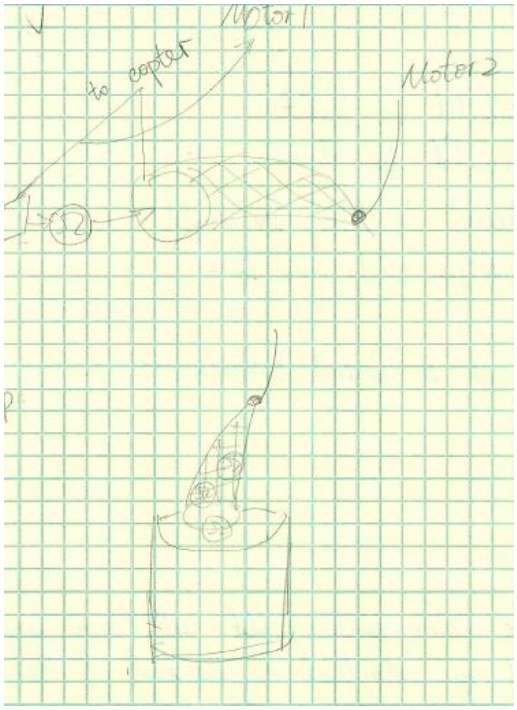

Figure 21: Concept P

5.3 Concept Selection

Concept A: Lateral Moving Cage

The lateral moving cage will allow for multiple balls to be picked up, including balls of varying weights. It can be constructed with light weight metal or composites. The design ensures that no balls will be unwillingly released.

However this design is large and regardless of material make up it will weigh more than some of the other designs. The bottom of the cage will also make it hard to land, in that a ball cannot be directly under the bottom surface of one of the two sides of the cage. This contraption will require some gearing, a motor and an infrastructure.

Concept B: Bombay Door Cage

The Bombay door cage gives the ability to retrieve multiple balls at once and can be composed of composites and/or metal wiring.

The Bombay door design requires two motors and requires them to be placed externally from the body of the aircraft. This puts the motors in danger and adds excess moments to the aircraft, making it harder to control. The more motors that are added to the design the more power the aircraft will consume in operating the contraption and additional lift.

Concept C: Single Ball Suction Cup

This design will allow the aircraft to pick up one tennis ball. Unfortunately due to the surface area of the ball the team believes that there will not be enough suction generated to contain a tennis ball. The power requirements of a vacuum would also be substantial. Additionally the weight of the vacuum would cause more power requirements to generate the appropriate amount of lift for the duration of the competition.

Concept D: Angled Moving Cage

The angled moving cage is a base design for a multitude of mechanical systems, in that the initial idea of using two sharply angled cages is applied for all of the systems however there are different ways in which it could work. The first of which requires two motors and two gears. It is relatively simple system however the additional motor will add more weight and more power requirements. The second mechanical system requires only one motor but three gears: two straight gears and one circular gear. The system will also require two guide rails. Unlike Concept A, the angled nature of the doors prevents undesired tennis balls from becoming stuck under the cage while the quadcopter is attempting to land.

The drawback to any cage system is added weight. Depending on the material utilized for the cage, this can be drastically reduced.

Concept E: Three Prong System

The three prong system allows for the quadcopter to pick up one tennis ball. No undesired balls can be trapped under the system while the quadcopter is landing. Unfortunately the mechanical system and the multiple motor requirements will drastically increase the power drain on the system.

Concept F: Technology Integration

All of these concepts could be of great benefit to the system, especially if there is little to no line of sight to the quadcopter. They will add an unnecessary power drain to the system and are unnecessary to complete the mission. After the majority of testing has been completed these will be revisited to see if they could boost the mission capabilities of the quadcopter.

Concept G: Spring Loaded Prong System (head scratcher)

This system will be able to retrieve one tennis ball and utilizes a fairly simple technique to do so. Pending how it is set up the contraption has the capability to be rather light. It will require a motor or solenoid to pull the prongs together. The system is entirely dependent on the strength of the prongs to keep the ball contained while in flight. As the

system is entirely dependent on the motor to function while midflight to keep the ball onboard there is a more efficient way to do this. Please see Concept K.

Concept H: Hanging Puncture Device

This device requires a suspended rod to capture the ball. The control required to do this is beyond the scope of the knowledge of team Hella-Kitty at the moment due to the fact that the team has not received the transmitter to control the quadcopter and cannot get a baseline for what to expect of the control system. Based on current expectations this will be outside of the realm of capabilities for the control system. Additionally this concept violates one of the fundamental requirements to keep the payload safe. The concept would stab a tennis ball to retrieve it.

Concept I: Hanging Velcro Belt System (or disk)

The hanging Velcro system would allow the quadcopter flexibility in the precision required to retrieve a tennis ball. The hanging Velcro belt system requires a system that has a prong that would separate the balls from the Velcro, however the ball would fall onto any balls hanging below and therefore miss the drop zone. They could also reattach to the Velcro. With the disk system the balls would be separated from the Velcro via a spinning blade or a preexisting wire system. Unfortunately the team does not know how well a tennis ball will affix itself to the Velcro, especially the heavier tennis balls.

Concept J: Hole in Belt System

The hole in a belt system would primarily be utilized for the retrieval of one ball but could be adapted for multiple balls. It would only require one motor which is optimum for batter life. However, it would be a complicated system to construct and require a large support structure which would add on additional weight.

Concept K: Solenoid Multi Prong Claw (head scratcher)

Instead of using a motor to keep the prongs in a closed position like in Concept G, this concept uses a solenoid to push the prongs apart. At rest the prong will be in a close position, thus requiring to extra energy midflight to contain the ball. However in both cases only one ball can be retrieved and the system is entirely dependent on the strength of the prongs.

Concept L: Sphincter Cylinder System

This system would behave like the prong systems aforementioned. This system would require much accuracy in landing the vehicle and would be able to pick up one ball. It could however be modified to pick up more. The ball would have to pass through the squishy diaphragm in order to be retrieved. Finding a suitable substance could prove to

be difficult especially with varying ball weights. The ball would be pushed out using a solenoid, which will use less power than a motor.

Concept M: Multi-ball vacuum system

This concept would allow the quadcopter to pick up multiple balls and after retrieval the system would not need to be powered. However the power required to run a vacuum to gather multiple balls would be immense. Additionally, the vacuum would be heavy and so would the containment vessel.

Concept N: Moving Leg System

This design allows for one ball to be retrieved at a time. The ball will stay well contained for the duration of the flight while required no additional power besides the motors to move the legs in and out. However this design requires multiple motors which add weight and more power requirements.

Concept O: Multi-ball Kicker System

This design gives the quadcopter the ability to gather more than two balls at once. The containment vessel would also be rather light. The balls would be gathered via a mechanical kicker and expected to bounce along a path and into the containment vessel. The kicker and the vessel would each require one motor. Unfortunately the system as a whole is rather cumbersome and the predictability of the ball to follow the given path is lower than it should be in order to be utilized.

Concept P: Hanging Net System

The hanging net system would be able to retrieve more than two balls at once. It would be more reliable than the kicker system and would be fairly light. The scoop used to push the balls into the net would be simple to construct and require a motor. The only difficult piece to construct would be the support used to position the second motor that hoists the bag. This could add much weight to the system and requires an additional motor.

Table 5: Concept Screening

Concepts	Ball(s)	Design	Manuf.	Destruction	Power Usage	Weight	Size Req'mt	Easy of Operation	Load Speed	Security	Cost	Total
Concept A	+	+	+	0	+	0	+	+	0	0	0	6
Concept B	+	+	+	0	-	-	0	0	0	0	0	1
Concept C	0	+	-	0	-	-	-	+	+	-	0	-4
Concept D	+	-	+	0	0	0	-	+	0	0	0	1
Concept E	0	+	+	0	-	0	0	0	0	0	-	1
Concept G	0	+	-	0	-	0	-	-	0	0	+	-3
Concept H	0	+	+	-	0	0	-	-	0	-	+	-2
Concept I	+	+	0	0	-	+	+	-	+	-	0	2
Concept J	+	0	-	0	0	-	0	0	+	0	0	-2
Concept K	0	+	+	0	0	0	0	+	0	0	0	3
Concept L	0	+	+	0	0	0	0	0	0	0	0	2
Concept M	+	+	0	0	-	0	-	0	+	0	0	1
Concept N	0	+	+	0	0	+	0	0	0	0	0	2
Concept O	+	-	-	0	+	-	-	-	-	0	-	-5
Concept P	+	-	0	0	0	0	0	0	-	0	0	-1

Table 6: Concept Scoring

		Concepts							
		A		I		K		L	
Selection Criteria	Weight	Rating	Weighted Score	Rating	Weighted Score	Rating	Weighted Score	Rating	Weighted Score
Pick up More than One Ball	0.1429	4	0.5716	3	0.4287	1	0.1429	2	0.2858
Ease of Manufacturing	0.1429	4	0.5716	2	0.2858	3	0.4287	2	0.2858
Ball Security	0.1017	4	0.4068	1	0.1017	4	0.4068	3	0.3051
Ease of Operation	0.1786	3	0.5358	2	0.3572	4	0.7144	3	0.5358
Accurately Releases Payload	0.1429	3	0.4287	1	0.1429	4	0.5716	4	0.5716
Pick Up Balls of Multiple Weight	0.1017	4	0.4068	1	0.1017	3	0.3051	2	0.2034
Utilize Composites to Decrease Weight	0.0714	4	0.2856	2	0.1428	3	0.2142	4	0.2856
Load/Release Speed	0.1017	2	0.2034	3	0.3051	4	0.4068	3	0.3051
Total		3.4103		1.8659		3.1905		2.7782	
Ranking		1		4		2		3	
Continue?		Yes - Primary Design		N		Yes - Alternate Design		N	

Based upon this concept score table it was an easy decision to proceed with concepts A and K, the cage design and the prong design. Granted however that these designed were still subject to change after the team was able to fly the quadcopter and evaluate the concepts with the Boeing sponsors during visits.

6.0 System Level Design

The preliminary design, shown below, uses gears, motors, pronged bars and gates to perform movable arms. The gears are put in between each motor and bar, which allows bars to move toward center or wide open. The gates are attached vertically at the end of each bar so that balls will not fall out after being picked up.

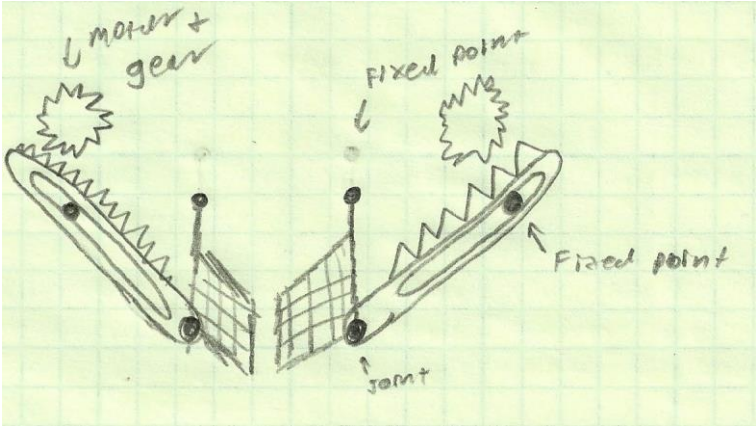

Figure 22: Hand Drawing of Preliminary Design

The two arms are initially open. When the copter hovers on a ball, motors will be turn on. To pick up a ball, the motor on the left will run clockwise and the motor on the right will run counterclockwise, so that two arms will move toward center and pick up the ball. After the ball is being picked up, motors will be shut down until the copter flies to the drop-off location. Accurately

When copter hovers above the drop-off trash can, the motors will be turned on again. This time, the motor on the lift will run counterclockwise and the motor on the right will run clockwise, so that two arms will move toward side and release the ball. This process will be repeated for picking up multiple times.

This design is fairly easy to manufacture and build. By using specific material, the weight of the system can be reduced while remain the same solid performance. Also with this design, the copter can pick up multiple balls for one time.

7.0 Special Topics

7.1 Budget

Boeing has allocated us a $1000 budget that can be used to purchase necessary materials, services and information that will assist in making the project a success. The materials that Boeing has already allocated can be seen in Table 1, which has a total cost of $545.00.

Table 7: The materials and tools supplied by Boeing, with a total cost of $545.00.

Brand	Name	Number	Quantity	Price (each)	Website
SKYRC	LiPro Balance Charger	iMAX	1	39.99	http://w
Turnigy	High Discharge LiPO Battery	35-70c	2	32.29	http://w
3DRobotics	Composite Propeller Slow Flyer Pusher	LP	1 set of 2	8	http://st
3DRobotics	Composite Propeller Slow Flyer	LP	1 set of 2	8	http://st
3DRobotics	3DR ArduCopter Replacement Arm Blue		2	9.99	http://st
3DRobotics	3DR ArduCopter Legacy Replacement Arm Black		3	9.99	http://st
3DRobotics	Motor 850Kv AC2830-358	AC2830	4	18	http://st
3DRobotics	APM 2.6		1	159.99	http://st
3DRobotics	Zip Tie 6"		8	0.15	http://st
3DRobotics	316 Stainless Steel Screw		42	0.32	http://st
3DRobotics	Zinc Plated Metal Screw		4	0.29	http://st
3DRobotics	Black Nylon Spacer		24	0.7	http://st
3DRobotics	M3 Metal Lock Washers		8	0.1	http://st
3DRobotics	M3 Black Nylon Hex Nut		24	0.33	http://st
3DRobotics	Velcro Battery Strap		1	2.99	http://st
3DRobotics	M3 Rubber Washer		4	0.17	http://st
3DRobotics	3DR ArduCopter Replacement Legs		2 sets	15.99	http://st
3DRobotics	3DR ArduCopter Replacement Stack-up Plate		1.5	15.99	http://st
3DRobotics	APM Power Module with XT60 Connectors Kit		1	24.99	http://st
3DRobotics	Telemetry adapter cable for APM 2.5		1	2	http://st
3DRobotics	Jumper cable 5 pin to 5 pin individual female 15cm		1	2	http://st
3DRobotics	Jumper cable 2 pin female 15cm		1	1.5	http://st
3DRobotics	Quadcopter Power Distribution Board kit		1	15	http://st
3DRobotics	Female T plug - Male XT60 adapter		1	2.75	http://st
3DRobotics	Black Nylon Screws		16	0.2	http://st
3DRobotics	Micro USB Cable		1	5	http://st
3DRobotics	Deans Ultra Plug Connector MALE		4	1	http://st

The list for the budget as of September 24, 2013:

Table 8: List of materials purchased throughout the semester to assist with the project

ITEM	COST $	NUMBER	TOTAL
motors	18	2	36
blades	8	4	32
batteries	32.29	2	64.58
Final Poster	50-70	1	
			132.58

7.2 Project Management

A Gantt chart showing milestones, tasks and responsibilities is attached in Appendix A. The Gantt chart will be used throughout the semester. The team will keep on track and record progress.

The team is in consisted of students with solid analyzing, modeling and manufacturing backgrounds. The team has strong technical and managerial skills to complete the project. Resumes of each team members are provided in Appendix B.

7.3 Risk Plan and Safety

Team Hella-Kitty knows that safety is a very real concern with this product. The copter itself is suspended in the air by four rotating propellers. The propellers are not very sharp, but the propellers are capable of doing significant damage while spinning fast enough to hold the copter in the air. Our team will make sure to keep everyone a safe distance from the copter while flying, and will make sure that anyone close is wearing protective equipment, such as safety glasses and helmets.

The team has identified five risk factors involved with this project. Breakage is the highest risk because we are fairly certain that something will probably break. The copter itself may fall from a great height, or it may run into something. Team Hella-Kitty will definitely have backups of items that will probably get damaged, such as the propeller blades, but there is no part of the copter that will totally immune from damage. Hopefully, by flying cautiously, the pilot will be able to minimize the number of items that break.

There is a high risk that the customer needs will change multiple times throughout the product. This is evidenced by the diverging vision provided by the customer. In so far as many requirements have been added, changed, and removed. As long as the team keeps in contact with them and let them know of any significant changes we are planning on making we will probably be able to avoid wasting time and money.

As the members of the team and the customers have obligations outside of this project, the team recognizes that there is a moderate risk of schedule delays. Team Hell-Kitty will do its best to maintain its schedule by aiming to finish assignments well before they are due, and will try and communicate frequently enough with each other and the customers so that it can understand any scheduling issues before they happen. The team will then be able to reassign responsibilities as necessary.

Team Hella-Kitty estimates that there will be a moderate risk of significant pilot error. This could cost our team a few extra seconds of flight time, this could cause us to miss picking up a ball, or worst of all it could result in damaging the craft or a person. To minimize this risk, the pilot should spend lots of time practicing. Any person in proximity to the copter should stay a

safe distance away in case of a possible pilot error as well. If a pilot is too stressed, it may be necessary to switch pilots.

Though the team estimates a relatively low risk for this, there is absolutely a chance that the equipment will malfunction. The copter is suspended in the air by the symmetrical rotation of all four propellers. If even one propeller spins too fast or too slowly, the copter could fly off in a completely wrong direction, potentially damaging the copter or harming a person. To minimize the risk of a malfunction the team should examine the equipment prior to flight and stay a safe distance from the copter. If a malfunction happens, and the team is unable to land, it will be best to stay away from the copter until the battery discharges.

Table 9: Risk Analysis

Risk	Level	Actions To Minimize	Fallback Strategy
Breakage	High	-Fly cautiously -Check parts before flying -Have backup parts	-Replace part
Customer Needs Change	High	-Keep in frequent contact with customer -Refrain from significant changes without contacting customer	-Cut losses and rebuild part of the copter -Modify current design to better fit customer needs
Schedule Delays	Moderate	-Always give a large temporal buffer -Keep track of progress and in contact with group members	-Extend past early due date -Reassign to other group member
Pilot Error	Moderate	-Practice flying frequently -Stay a safe distance from copter	-Try and recover from the error -Switch pilots if necessary
Equipment Malfunction	Low	-Stay a safe distance from flying copter -Check equipment before flying	-Try and land if possible -Wait until battery discharges

7.4 Ethics Statement

Team Hella-Kitty is aware that, in order to be successful, must adhere to a high ethical standard. It is very important that the team upholds the rules laid out in the team contract was signed due to the fact that if members cannot rely on each other then the team will never get anything done. The team realizes that the project will use data from external sources, and the data used by these sources will be cited. Finally, team Hella-Kitty will also not attempt to deceive the customer. The team will inform The Boeing Company of any shortcomings which may exist in the final product, especially those which are safety-related.

7.5 Environmental Statement

Team Hella-Kitty believes that protecting the environment is of the utmost importance. The construction of the product involves some materials which are harmful to the environment. The team will strive to minimize that harm as much as possible. Most importantly, the team will insure that any batteries which may need to be disposed of will be disposed of in the safest way available to us. Batteries which are disposed of improperly can cause significant environmental stress. Also, any materials which can be recycled will be recycled. It is especially important to recycle plastics because of how long the material lasts and how problematic plastic can be to the environment.

7.6 Communication Statement

Adam Mohamed and John Chisholm, employees of The Boeing Company, are the team's customer contacts. Team Hella-Kitty has and will continue to meet with the contacts at least once a week via video conference in order to discuss issues, ask and answer questions, and refine the customer needs. In between conference calls, the team is in frequent contact via e-mail. The team will meet with the sponsor at least once in person in order to become acquainted with the flight controls of the copter that the team will be modifying.

Team Hella-Kitty meets with their University mentor, Wallace Catanach, twice a week in person. He is a member of the faculty at Penn State and is the professor for EDSN 460W. The team discusses project planning and logistics with him.

Outside of these meetings, team Hella-Kitty meets about twice a week to further progress on their own. Team meeting frequency and length is dependent on how much work is necessary to finish that week. The team will also keep in contact via e-mail and phone, and will arrange to meet in person to finish work if necessary.

8.0 Detailed Design

Modifications to Statement of Work

8.0.0 Executive Summary

The final design consists of two radial moving doors that are each attached to two servomotors. The same concept applies however instead of moving linearly, they have a radial movement. The radial movement requires an increase in the overall length of the landing gear, as opposed to before, where the landing gear was decreased.

New 880kV motors have been added to the quadcopter to increase thrust without drastically increasing battery consumption. Larger eleven-inch propellers have replaced the current ten-inch propellers to increase the thrust of the system as well.

The power requirement needed to operate the quadcopter for the fifteen minute time period requires three batteries instead of the single battery for the initial configuration.

The sidewalls are designed to be made manufactured in sections using a three-dimensional printer. Each wall contains a stainless steel cord to increase strength without sacrificing weight. The sections will be assembled using a high strength bonding adhesive.

The team has been able to fly and has gotten a grasp on how well the quadcopter responds to the controllers input. The system is fairly accurate and with more practice, the pilot will become more apt at controlling the system. As the inclement weather of State College becomes more frequent closer to winter, the team has not had the appropriate amount of time to construct a gains chart. The gains chart will display the gains and response levels for a variety of quadcopter configurations such as variable loading. Once this is complete, the team may elect to configure the controller for the correct settings for a specific load configuration. This would make the quadcopter more efficient and give the pilot greater control.

8.0.1 Introduction – no changes

8.0.2 Customer Needs – no changes

8.0.3 External Search – no changes

8.0.4 Engineering Specifications – no changes

8.0.5 Concept Generation and Selection

8.0.5.1 Switched from solenoids to servomotors

The team's foremost reason for making the switch from solenoids was due to voltage concerns. All but the most expensive solenoids that the team was able to find required a voltage which was

too high for the APM board to handle. The team's options were to order the more expensive solenoids, use a voltage regulator, or use something other than solenoids.

Servomotors are convenient to work with. They are strong, easy to program, and the team was able to find servomotors for a reasonable price that will pose no risk to the APM board. Instead of using two solenoids to push and pull the cage, the team has elected to use four servomotors (two on each side of the cage) to pivot the sidewalls of the retrieval mechanism together and apart.

The two solenoids each provided a force of 3.629 kilograms to capture a payload. Each servo applies 2.8 kilograms per centimeter of force. The solenoids are heavier than their servomotor counterparts weighing 0.36 kilograms each, while the servos weight 17 kilograms each. The change to the servomotors makes the system slightly lighter while adding more force to system in order to capture the tennis balls. Servomotors are also much more responsive than solenoids given that they are able to move sixty degrees in 0.12 seconds. The voltage draw on the servos is only 4.8 volts, which is below the maximum allowable threshold to protect the APM board.

8.0.5.2 Modified cage Design

The team decided to modify the main cage design due to both internal concerns and concerns voiced by the customer. The old design of the cage put too much stress on a few key points of the cage. There are now two connections on each side of the cage, these connections are strengthened with extra material that acts as a fillet, reducing the stress at those connections.

Another set of concerns was the balls sliding around or falling out of the cage during flight. The quadcopter is more difficult to control with an ever changing center of mass. To prevent keep the balls in place during flight, four small restraints were added to the bottom of each sidewall. The restraints split the cage area into thirds, one-third for each ball. For the case in which one ball has been captured, the nubs will prevent it from shifting around. This is also true for multiple balls. Additionally, the two horizontal support structures on each of the sidewalls have been shortened to prevent excessive motion.

The team also added some vertical supports to the top of the cage. The team became concerned that a ball could potentially roll out of the top of the cage if the quad copter turned at a sharp angle. The vertical supports at the top of the cage simply prevent balls on the sides of the cage from having any excess vertical movement.

The sidewalls that make up the retrieval mechanism have been designed for manufacture using a three-dimensional printer. Each sidewall has been sectioned into multiple parts to allow for ease

of printing. The sections will be bonded together and are assembled using a two common stainless steel cords. This is explained further in section 8.1, the manufacturing process plan.

8.0.6 System Level Design

Team Hella-Kitty has overhauled the system level design from the Statement of Work. As noted in the updates to the executive summary, the team has elected to replace the two solenoids with four servomotors.

The sidewalls each have two servomotors that will move ninety degrees in opposite directions as they are mounted backwards for system integrity purposes. As such, the sidewalls will move ninety degrees from the closed position to the open position. Additionally, the change from solenoids to servos gives the retrieval mechanism a greater area from which to gather its payload.

The energy saving concept used in the previous system design is replicated here. The servos will start in the non-energized closed state. Upon energizing they will move into the open position. As soon as it is de-energized the sidewalls will close on the payload, allowing the system to operate without any additional energy being supplied to the retrieval mechanism.

There will be three batteries in parallel used to provide power to the quadcopter and the retrieval system. All three batteries will be used to power flight, while one will be used to power the servomotors. The servomotors will be energized when the pilot flips a settings switch on the Spektrum DX-7 controller.

Full utilization of the controller and the realization that the center of mass will change pending the payload of the system has led the team to decide that multiple controller configurations can be used. The team is currently conducting research into the gains and response rates of the motors for different payloads. If the research is successful, multiple gain and response rates will be configured into the controller as it has three additional channels for programming. This will give the pilot greater control of the quadcopter depending upon the payload.

8.0.7 Special Topics

The preliminary budget has been updated in section 8.7 of the Design Specification Report.

8.1 Manufacturing Process Plan

The overall design of the quadcopter and its components has been simplified for manufacturing. The doors of the retrieval apparatus have been sectioned off for three-dimensional printing as there are geometric restrictions. The three-dimensional printers cannot print greater than ten inches tall and cannot bridge. Bridging is the process of printing a surface that is elevated above another with no supporting structure beneath it. The two doors have been sectioned accordingly

to compensate for not be able to bridge and the height restriction. The three-dimension printing material will be ABS plastic as that is the stronger of the two materials. The sections will be assembled using a bond known as JB weld. It is particularly strong when applied to plastics. As illustrated in the drawing below, each of these sections contain two holes. This is for the support rod. The support rod adds strength to the system, aids in the assembly process, and lowers the center of mass to a point closer to the direct center of the quadcoper's frame. The support rod will be cannibalized from a coat hanger, which on average is made of stainless steel. The plastic coating surrounding the metal will be grinded off to allow for tolerances. The three-dimensional printing process is extraordinarily accurate, however sometimes the glue will run and bead up in certain places. These beads will be grinded off.

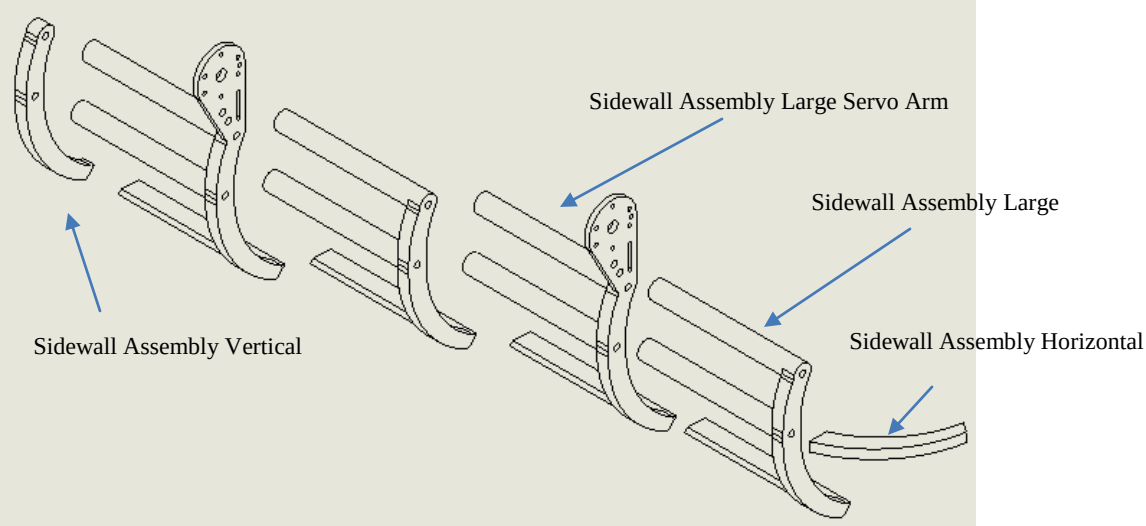

Figure 23: Partial Assembly of Sidewall

The servo motor brackets will also be three-dimensionally printed. They are composed of two parts: the main bracket and a supporting top. These two parts will be assembled using JB Weld. Additionally the bracket assembly will fastened to the bottom of the quadcopter base using JB Weld. The servos will we fastened to the bracket assembly via two bolts so that they may be removed as necessary. The reason for using JB weld is that it is has remarkable bonding strength, it is very light. The necessity of keeping the quadcopter light is crucial as such, this bonding adhesive is being use to primarily replace the bolts that would normally be used to assemble these components therefore keeping the structure as light as possible. Bolts also are more subject to vibration forces and can become loose over time. Bonding agents are less prone to this incidence.

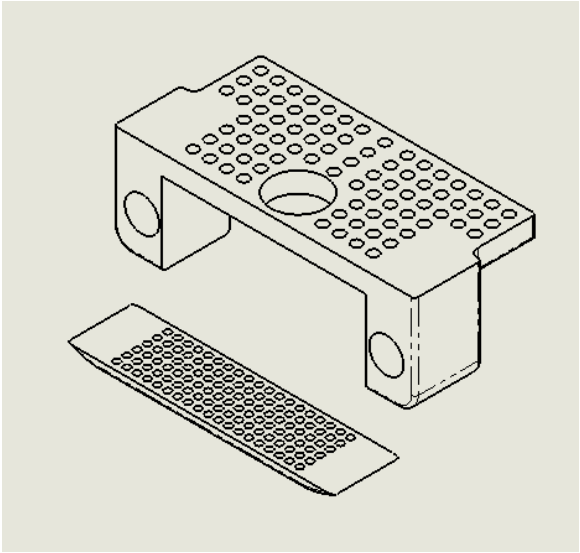

Figure 24: Assembly of Bracket

The list of components to be printed are as follows:

Table 10: 3D Printed Bill of Materials

Quantity	Part Name
8	Ball Support
4	Sidewall Assembly Large Servo Arm
4	Sidewall Assembly Horizontal
4	Sidewall Assembly Large
8	Servo Arm Support
2	Sidewall Assembly Vertical
4	Brackets
4	Bracket Supporting Tops

Component drawings can be found in Section 8.5.

There are no tolerances because the three-dimensional printers are extremely accurate. However, the stainless steel rods have a diameter smaller than that of the holes in the sidewall components, so there is technically one inherent tolerance.

8.2 Analysis

8.2.1 Finite Element Analysis

Team Hella-Kitty was able determine the strength of the structure through the utilization of SolidWorks' Finite Element Analysis package. The team first applied a two kilogram load to the bottom of the door while using the servo attachment hole as its fixed point. The results can be located in Appendix B. Only 1.97 millimeters of deformation occurred. The two kilogram case is

a simulation of the structure's response to two of the heavily loaded one kilogram balls. Team Hella-Kitty then decided to run a FEA simulation for a case where three of the heavily loaded one kilogram balls. The displacement for this has been illustrated below. Clearly, the structure can take the weight without fail. The quadcopter will not even be able to lift this much weight, therefore our results are well within the design parameters. Only 2.956 millimeters of deformation occurred. A normal payload of three average tennis balls (0.171 kg) was then evaluated, resulting in 0.172 millimeters of deformation. All of the finite element cases are listed in Appendix B.

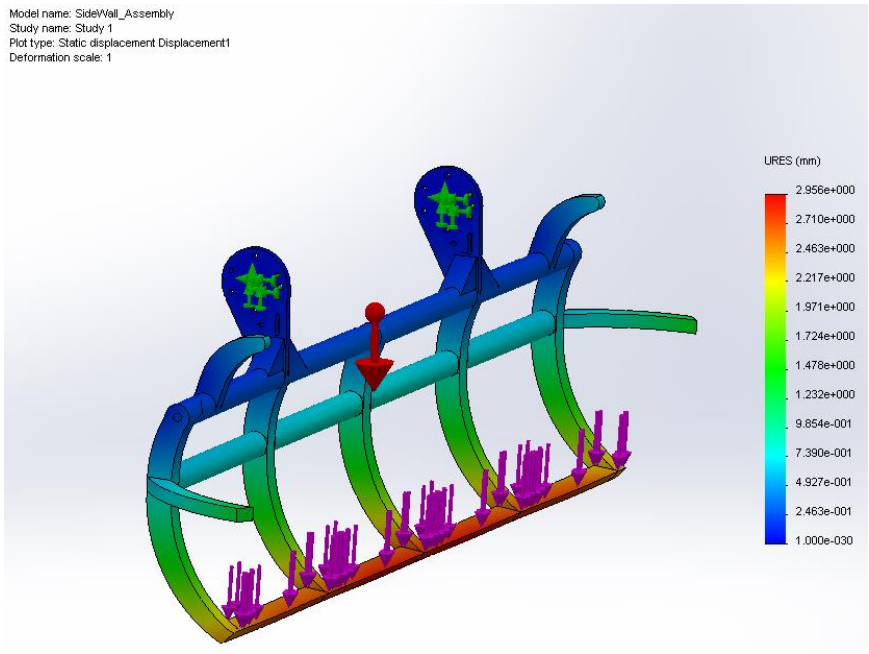

Figure 25: Displacement of 3kg Case

Finite element analysis was also conducted for the bracket assemblies which attach the servomotors to the base plate of the quadcopter. Similar to the analysis of the sidewall, multiple cases were considered. The following table illustrates four possible loading conditions. The heaviest load listed which would be the case of two heavy one kilogram balls only has a displacement of 0.7989 millimeters. This is not the displacement that the brackets would experience however. The analysis was conducted for a single bracket. There are four in the system, which means that the force of a two kilogram payload is evenly distributed across all of the brackets. Therefore the displacements and stresses listed below are approximately four times greater than what a single bracket would experience.

Table ##: 4x Bracket Finite Element Analysis Results

Servo Bracket Assembly Analysis

Description	Force [kg]	Displacement [mm]	V-M Stress [N/m^2]
2 Heavy Balls	2	0.7989	42307984
1 Heavy Ball, 2 Avg	1.2	0.4974	25385730
3 Avg Balls	0.171	0.0684	3622228

The following figure depicts the displacement of one of the brackets as it experiences a two kilogram load, four times what it actually would. The brackets have clearly been over engineered and have a safety factor much larger than necessary.

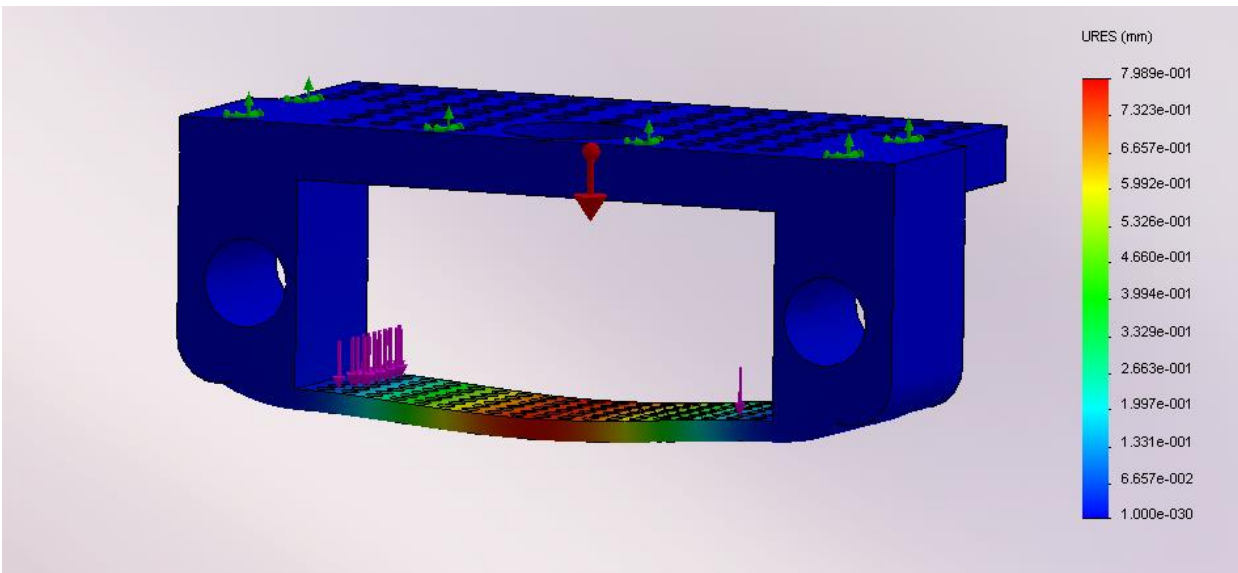

Figure 26: Finite Element Analysis Displacement of 4x Case for 2kg Force

8.2.2 Center of Mass Calculations

The quadcopter must remain in a stable flight condition throughout the entirety of the competition. This means that no matter what payload the quadcopter retrieves the pilot must be able to maintain control. The easiest way to ensure this is for the center of mass to be below the middle of the motors. If the center of mass is allowed above that point, the quadcopter is modeled as an inverted pendulum, which is much harder to control. This is particularly true when the quadcopter unloads the tennis balls. The gains must be adjusted so as to not overcompensate the thrust of the motor with a change of direction. If this does not occur the quadcopter will flip upon itself resulting in disqualification from the competition. The table containing the center of mass for all possible ball positions and variances is located in Appendix B.

SolidWorks is particularly useful for calculating the Center of Mass of an assembly. Illustrated below is the center of mass analysis for the unloaded case of the quadcopter. This is the most normal condition that quadcopter will experience during competition. The center of mass is clearly visible as the pink coordinate system in the picture. This is almost exactly at the middle of the motors, which will make for responsive controls.

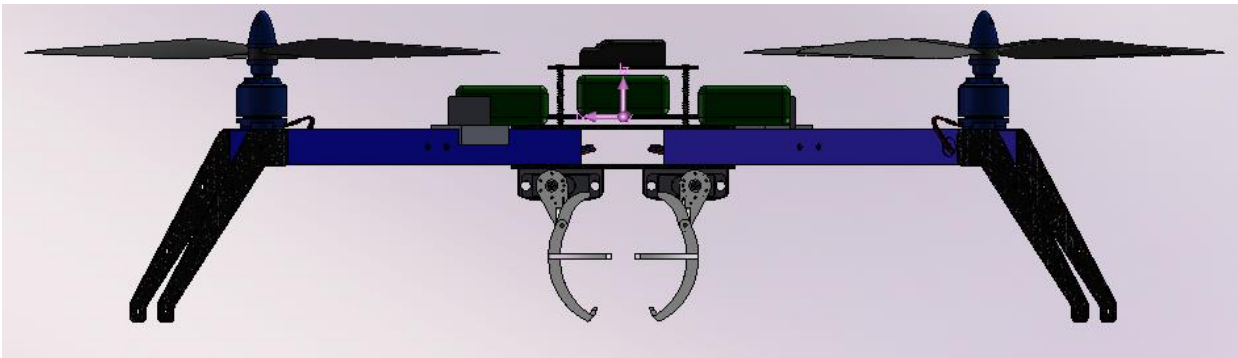

```
Mass properties of Hella_Kitty_No Load
   Configuration: Default
   Coordinate system: -- default --

Mass = 1756.92 grams

Volume = 822935.48  cubic millimeters

Surface area = 560580.69  square millimeters

Center of mass: ( millimeters )
    X = -0.04
    Y = 26.18
    Z = -0.08

Principal axes of inertia and principal moments of inertia: ( grams * square millime
Taken at the center of mass.
     Ix = (1.00, -0.00, -0.07)    Px = 14459480.28
     Iy = (-0.07, -0.00, -1.00)   Py = 15230284.25
     Iz = (0.00, 1.00, -0.00)     Pz = 27820991.43

Moments of inertia: ( grams * square millimeters )
Taken at the center of mass and aligned with the output coordinate system.
    Lxx = 14463292.80          Lxy = -977.36              Lxz = -54074.40
    Lyx = -977.36              Lyy = 27820983.45          Lyz = 9982.57
    Lzx = -54074.40            Lzy = 9982.57              Lzz = 15226479.7(

Moments of inertia: ( grams * square millimeters )
Taken at the output coordinate system.
    Ixx = 15667118.92          Ixy = -3003.25             Ixz = -54068.16
    Iyx = -3003.25             Iyy = 27820998.26          Iyz = 6278.31
    Izx = -54068.16            Izy = 6278.31              Izz = 16430297.83
```

Figure 27: Unloaded Configuration Center of Mass and Results

The center of mass SolidWorks calculation for the case of a payload of three normal tennis balls can be found in Appendix B. As a double-check team Hella-Kitty did hand calculations for the center of mass for this case. The spreadsheet can be found in Appendix B, the results are found in the table below and are accurate. This helps to prove the accuracy of the SolidWorks calculation.

Table 11: Center of Mass Position for Loaded Case with 3 Normal Tennis Balls

	COM_Position
COM_SUM_X	0.012760067
COM_SUM_Y	8.092774672
COM_SUM_Z	-0.00181356

8.2.3 Flight Time Calculations

The correct configuration of batteries, motors, and propellers was attained through the use of calculations made in an excel spreadsheet, which can be found in Appendix B. Using iterations team Hella-Kitty was able to determine that it would need three batteries to achieve a fifteen minute flight. This is a mixed flight, meaning that for part of the time the payload will be onboard and for the rest of the time it will not. The team determined that it would only want to lift one of the single kilogram balls at a time, thus allowing for a five-hundred grams allowance available for the construction of the retrieval mechanisms. The retrieval system currently weighs one-hundred-seven grams. The parameters for the mission which include a fifteen minute mixed flight duration and fifteen-hundred grams of payload, were met by only two configurations. The plot of allowable payload versus mixed flight time is illustrated below.

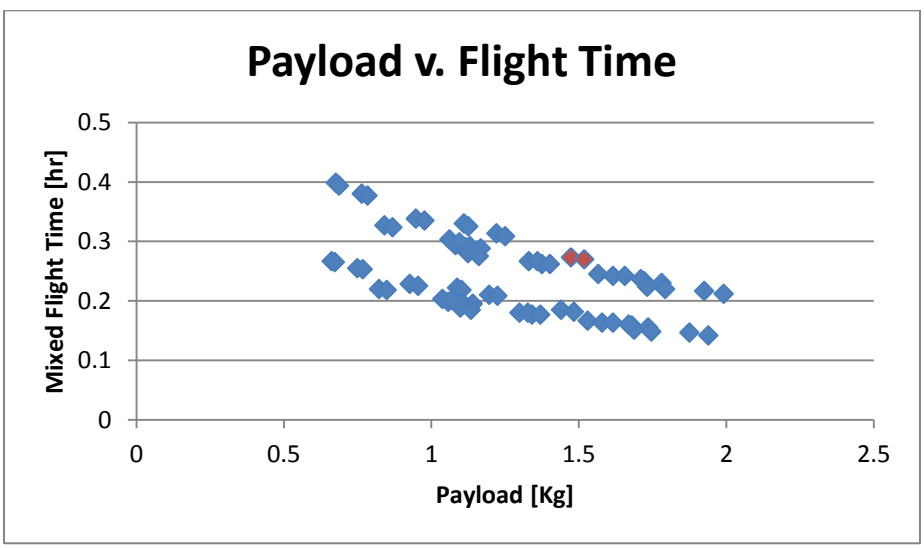

Figure 28: Allowable Payload v. Mixed Flight Time

Clearly, only one configuration meets the requirements of the team's ideal system. Additionally, another configuration was very close. The ideal configuration is composed of 3D Robotics' 880kV motors, eleven-inch propellers, and three batteries in parallel.

8.2.4 Connection Analysis

For this project, the entire system is built upon two sub-systems. One is a flying system and another is a pick-up system. Both systems are connected to an Arduino board, so that a single 7-channel transmitter can control both systems. The team decided to use a three-battery configuration to ensure a 15-min flight time, which requires a parallel connection between three batteries to have an output of 11.1V. A power module is needed to provide a 5V output to power Arduino board, also a 12V output for ESCs and motors. For the pick-up system, instead of using the 5V power supply from Arduino board, the team uses a 4.8V 800mAh battery to power four servos. The signal wires from the left-front servo and the right-back servo are connected to one output signal pin on the Arduino board and the signal wires from the right-front servo and the left-back servo are connected to another output signal pin on the Arduino board. Two control channels are used to control the four servos. The signal wires from the ESCs are connected to four output pins on the Arduino board so they are separately controlled to perform a function of flying in all directions. All ground wires from ESCs, batteries and servos are connected to a common ground on the Arduino board. A flow chart (Appendix F) is attached for reference.

8.3 Material and Material Selection

8.3.1 Landing Gear

The material for the landing gear has yet to be determined. Time permitting, the landing gear will be constructed of fiberglass with an epoxy resin coating, all wrapped around a light weight balsa wood core. The balsa wood will be used as a frame while the fiberglass and epoxy resin will be used to handle the heavy stresses that will occur as the quadcopter is landing. All three materials are extremely light and can handle high stresses once combined. If time becomes an issue, the team will use a water jet cutter to and make the landing gear out of Plexiglas.

8.3.2 Sidewalls

A trade study was conducted to determine the proper material for the construction of the retrieval mechanisms sidewalls. The trade study can be found in the table below.

Table 12: Material Selection Trade Study for Sidewalls

Trade Study					
Material	Pine	ABS	Stainless Steel	ABS/Steel	Carbon Fiber (cloth)
Tensile Strength	40000000	30000000	513613000	191204333	600000000
Shear Modulus	88000000	318900000	7.70E+10	25879266667	5000000000
Weight (g) (1-Wall)	7.74	23.27	177.65	32.08	42.81
Lead Time (hrs)	6	0	6	0	6
Ease of Manuf (hrs)	20	2	20	2	15

A graphical representation of the trade study was necessary to properly select the material based upon differences in weight and strength in the form of the materials' shear modulus. This can be found below.

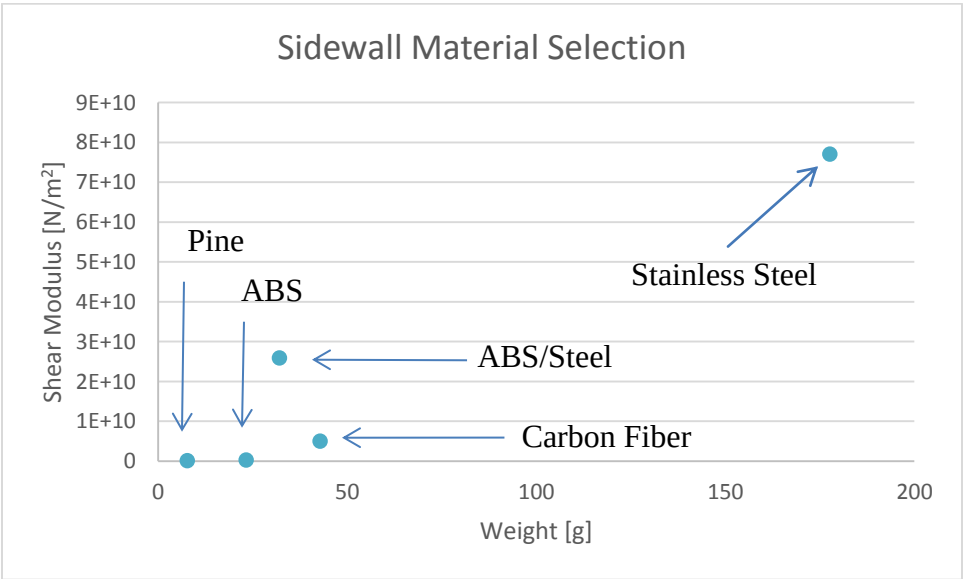

Figure 29: Trade Study Determining Sidewall Material

Clearly, if weight was not an issue, the team would choose stainless steel. However it is the most important parameter followed by the strength of the material. Therefore based upon the plot above and the trade study, the team was able to decide upon the steel corded ABS plastic material. It is a logical choice based upon its combination of low weight and reasonable strength. Additionally, this configuration can be made via the learning factory's three-dimensional printer, which uses ABS plastic and has a fast production rate.

8.4 Component and Component Selection Process

8.4.1 Motor and Propeller Selection

The team is originally given four 850kV motors and four 10x4.7 propellers. This basic combination will give the quadcopter enough flight time but not enough payload capacity. The team chose new motors and propellers based on the requirements of flight time, payload capacity, weight and budget. A copter calculation website that provides solid estimations is used as the first step to make a chart of motors and propellers that qualify the criteria of flight time and payload capacity. The combination of motors and propellers must give at least a fifteen minute flight time and a fifteen-hundred gram capacity. Another step of selection is taken by listing the weight of various motors. The balance of weight and thrust is critical for selecting motors. All oversized motors are eliminated during this step. Another step is to filter out the components that are over the budget. At the end, the team got the combination of using four 880kV motors and 11x4.7 propellers. The last step is conducted by doing hand calculations to check the consistency of flight time and payload capacity. Following equations are used derive the results:

Payload capacity: $A = (\frac{\pi}{4})D^2 = \frac{\pi}{4} \times \left(11\ inch \times 0.0833\ {}^{feet}/_{inch}\right)^2 = 0.659\ feet^2$

$$PL = \frac{Power}{A} = \frac{173.3W}{745.699\ {}^{W}/_{horsepower}} \times \frac{1}{0.659\ feet^2} = 0.3527\ {}^{hp}/_{feet^2}$$

$$TL = 8.6859 \times PL^{-0.3107} = 9.6859 \times (0.3527\ {}^{hp}/_{feet^2})^{-0.3107} = 12\ lb/hp$$

$$Lift = TL \times Power = 12\ {}^{lb}/_{hp} = 2.79\ lb = 1265.5\ g$$

A = area; D = diameter; PL = Power Loading; TL = Thrust Loading

A quadcopter has four motors which provide a total lift weight of 5062g. Then the payload capacity is derived by subtracting the weight of frame and add-ons. The final payload capacity by hand calculation is 1456g, which is consistent with the payload of 1427g provided by the website.

Flight time:

Flight time: $$I_F = \frac{P}{V} = \frac{173.3W}{11.1V} = 15.6A$$

$$T_F = \frac{4000mAh \times 3}{15.6A \times 4} \times 60\, {}^{s}/_{min} = 11.53\text{min}$$

Hover flight time: $$I_H = \frac{P}{V} = \frac{31.3W}{11.1V} = 2.8A$$

$$T_H = \frac{4000mAh \times 3 \times 85\%}{2.8A \times 4} \times 60\, {}^{s}/_{min} = 54.59\text{min}$$

Mixed flight time: $$T_M = \frac{4000mAh \times 3 \times 85\%}{\left(\frac{62.45A + 11.21A}{2}\right)} \times 60\, {}^{s}/_{min} = 16.61\text{min}$$

$$I_F = Flight\ Current;\ T_F = Flight\ Time;\ I_H = Hover\ Flight\ Current;\ T_H = Hover\ Flight\ Time;$$

$$T_M = Mixed\ Flight\ Time\ with\ 50\%\ of\ Flying\ and\ 50\%\ of\ Hovering$$

The comparison of the results verifies the consistency of the flight times.

Table 13: The Comparison of Calculation and Estimation

	Calculation (min)	Estimation (min)
Flight Time	11.53	11.2
Hover Flight Time	54.59	54.0
Mixed Flight Time	16.61	16.2

8.4.2 Servo and Power Source Selection

The team chose servos based on the criteria of torque, weight and input voltage. As stated in the requirements, the servos need to be able to supply enough torque to hold a tennis ball with one kilogram weight. Also, the team wants servos that require low power supply, because the higher the input voltage, the heavier the battery. Meanwhile, the weight of servos should remain low. The team found the model 'Hitec HS-82MG Metal Gear Micro Servo' which meets all of the requirements. As the team chose their servos, they realized that the Arduino board can only

power two servos. So they use a 4.8V 800mAh battery to power all four servos and this decision is made for several reasons.

The following chart shows the technical values for two operating voltages, which shows that a 6.0V power source can provide more torque compare to a 4.8V power supply. Another significant difference is the current draw form 6.0V system will be higher than a 4.8V system. Comparing the amount of torque that four servos can supply with the torque they need, the team wanted an operating voltage of 4.8V.

Table 14: Technical Value for 4.8V and 6.0V

	4.8V	6.0V
Operating Speed (No Load)	0.12 sec/60 degree	0.10 sec/60 degree
Stall Torque	2.8Kg	3.4Kg
Idle Current (Stopped)	10mA	10Ma
Running Current (No Load)	220mA/60 degree	280mA/60 degree
Stall Current	1450mA	1800mA

Other than the operating voltage, the team determined the capacity of the battery by estimating their operating scenario. They analyzed three stages of picking up the maximum load. One stage is the flight period between pick-up zone and drop-off zone; and during that stage, the sidewall is closed and servos draw the amount of idle current. Another stage is the time to open that gate; and servos draw the amount of running current. The last stage is the time to close the gate, and servos draw the amount of stall current. They estimated the percentage of time for each stage, which are about 40% for flight period, 40% for the time to open the gate and 20% for the time to pick-up the balls. An average current is derived and used to find the capacity of the battery.

$$I_{AVE} = I_{IDLE} \times P_F + I_{RUN} \times P_O + I_{STALL} \times P_C$$

$$= 10mA \times 40\% + 220mA \times 40\% + 1450mA \times 20\% = 382mA$$

$$C = I_{AVE} \times t \times 1.5 = 382mA \times 4 \times \frac{20min}{60\,{}^{min}/_{hour}} \times 1.5 = 764mAh$$

$$I_{AVE} = Average\ Current\ Draw;\ I_{IDLE} = Idle\ Current;\ P_F = Time\ Precentage\ for\ Flight$$

$$I_{RUN} = Running\ Current;\ P_O = Time\ Precentage\ for\ Open\ Gate;\ I_{STALL} = Stall\ Current$$

$$P_C = Time\ Precentage\ for\ Closed\ Gate; C = Capacity$$

Since the numbers are estimated by the team, a marginal factor of 1.5 is applied so that the team will have extra power to make some adjustments.

8.5 Computer Aided Design Drawings

Illustrated in the figures below are the open and closed configurations of team Hella-Kitty's quadcopter and retrieval mechanism. The first figure is the mechanism in the completely open position before it gathers its payload. The second figure depicts a close up of the mechanism once it has contained its payload. Detailed drawings of the mechanism and its components can be found in Appendix C.

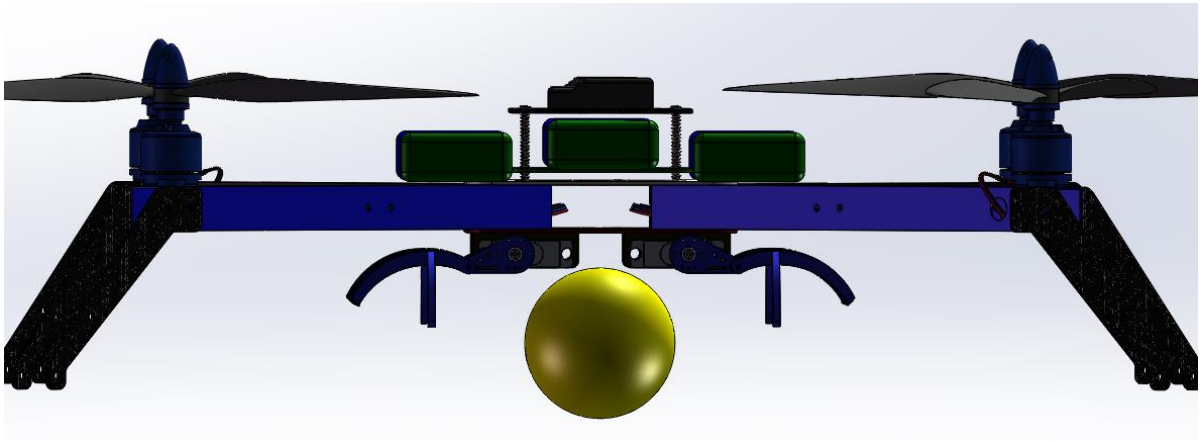

Figure 30: Sidewalls in Open Position

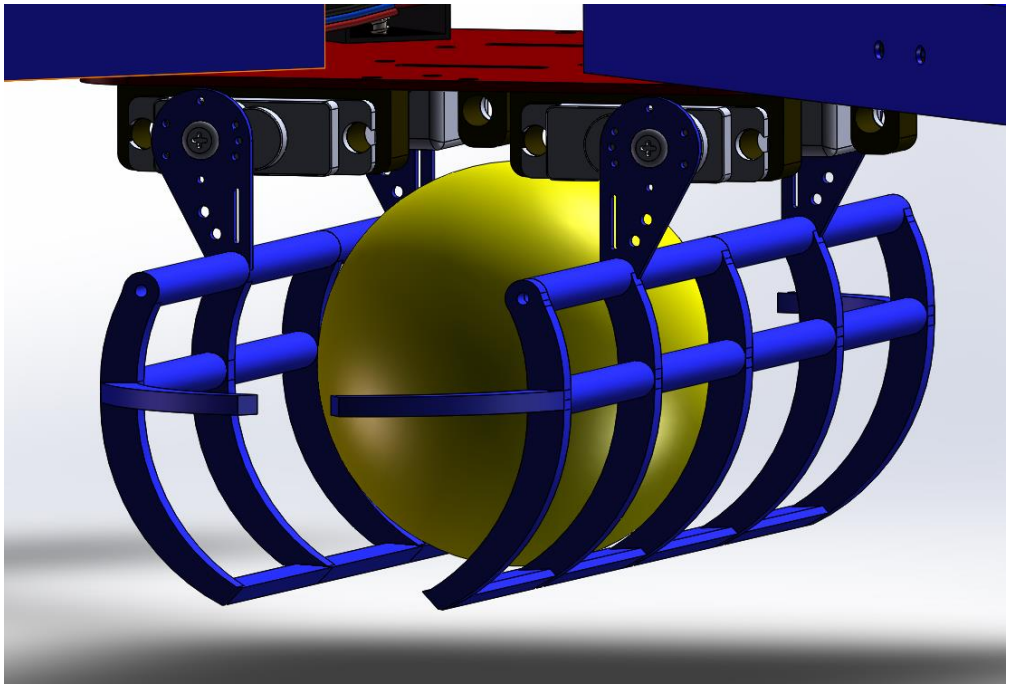

Figure 31: Close Up of Sidewalls in Closed Position

8.6 Test Procedure

The quad copter can present great risks if it is malfunctioning or if it is used improperly. To insure the safety of those nearby and to assess the quad copter's physical capabilities, the team has developed multiple testing procedures.

8.6.1 Nonphysical Test Procedures

The team conducted a Finite Element Analysis, and the values fruited by this analysis will be used in future tests to manage physical load. The FEA provides useful baseline values for the forces and stresses which the quad copter and pick-up device may experience during operation.

During software production, the team will perform unit tests on small portions of the code. The unit tests will encompass both tests for accuracy and for errors. The checks for accuracy will verify that the output of a particular module is what it should be for a given input; these checks will verify the output empirically, with special attention paid to boundary conditions.

The purpose of the error checking will be to discover any undefined behavior. The quad copter has to deal with many asynchronous (and synchronous) events. Because atomicity is not guaranteed, synchronization issues could arise. To check for these issues the team will repeatedly test the software under different circumstances.

8.6.2 Flight Test Procedures

Prior to flight, the team will verify that every piece of the quad copter is secured. Then, the team will verify that the motors and radio communication works. This can be achieved by arming the quad copter and lightly pushing the throttle stick. In the event that this step fails, ArduPilot Mega and Mission Planner provide several tests which can be used to test every facet of the quad copter individually. By using the test commands, the team will be able to determine which parts are at fault.

Once the quad copter can be armed successfully, the pilot will being to fly the quad copter and will verify the responsiveness to the radio controller. If the pilot feels that the responsiveness is non-preferential, then the PID values will be checked and adjusted accordingly. Using the baseline values the team currently has on record (P = .17, I = default, D = .0225) as anchor points, the team will use a binary search algorithm to first find the most comfortable P value and then to find the most comfortable D value.

After the pilot is comfortable with the PID settings, the team will test differently-weighted and differently-positioned configurations in order to discover which configuration is the most comfortable for the pilot. For each of the configurations tested, new PID values will need to be determined (using the previously outlined procedure). Once these PID values have been determined for the three most common configurations, the team will attempt to integrate these into the remaining channels on the controller. This will give the pilot greater control of the quadcopter based upon real-time payload conditions.

8.6.2 Retrieval Device Test Procedures

Prior to combining the pick-up device and the quad copter, the retrieval device itself can be tested. The results of the FEA will be used as a baseline from which to begin physically testing the device. The team will use variably weighted tennis balls to verify that the cage can handle the stress required for the operation for which it was designed. This test can be performed by manually anchoring the attachments of the cage and then filling it with the balls.

The servomotors will also be tested before being attached to the quad copter. They can be wired into the APM board and they should respond to the signals sent by the radio controller.

Once all of the pieces of the retrieval device have been tested, they can be combined with the quad-copter and the final phase of testing can begin.

8.6.3 Final Test Procedures

Using the PID values obtained for the configuration closest to the final configuration as anchoring points, the final PID values will be determined (using the procedure previously outlined). Following this, the pilot will attempt to pick up, carry, and drop anywhere from one to three variably weighted tennis balls.

Upon success of the previous steps, the flight duration will be tested. Using fully-charged batteries, the team will determine the mixed-flight time of the quad-copter. This period will include hovering, flying, and flying with weighted objects; the goal will be to emulate the experiences which will be achieved during the competition.

8.7 Economic Analysis

The total expense of the project, excluding the donated materials, is estimated to be $640.64. This expense includes extra material for necessary adjustments and to replace broken parts. The donated items are estimated to have a total expense of $939.90. This results in a total project expense of $1,580.54. Three- Fourths of the expense was implemented into developing a more energy efficient quadcopter and the other fourth was used to design, build and test the automatic cargo lift for the quadcopter. The Budget Allocation can be found in Appendix D and Bill of materials in Appendix E.

The vendors used to supply the project material and donated material was 3D Robotics, HobbyKing, Lowes, Drones and Motion RC. Penn State Supplied the machinery, storage and testing facilities at no additional cost.

9.0 Final Discussion

Modifications to Statement of Work and Detailed Design

9.0.0 Executive Summary

After flying with tennis balls of various weights, the team elected to operate with two batteries instead of three. Three batteries made the quadcopter much more difficult to control and since time was of the essence during competition the extra battery was forgone.

The team wrote code to control two extra switches on the Spektrum Dx-7 controller. The first switch has three positions and is named the flap switch on the controller. This switch was used to operate the motion of the sidewalls from zero degrees to 45 degrees to 90 degrees. This allowed for the landing the quadcopter into an area of tennis balls of varying density. The three positions also gave the pilot greater control of the sidewalls

when retrieving the tennis balls. The second switch is named auxiliary 2 on the controller and is a wheel knob. The team elected to use this knob to adjust the gains of the motors while in mid flight. Depending upon the position and weight of the retrieved balls the center of mass of the quadcopter will change. The quadcopter then becomes unstable, this knob allowed for the pilot to change the motor gains and return the quadcopter to stability and therefore made the quadcopter more controllable. This adaptive feature was crucial to the success of the quadcopter's mission.

9.0.1.1 Introduction – no changes

9.0.1.2 Customer Needs – no changes

9.0.1.3 External Search – no changes

9.0.1.4 Engineering Specifications – no changes

9.0.1.5 Concept Generation and Selection – no changes

9.0.1.6 System Level Design

Team Hella-Kitty decided, after many practices, to forgo the third battery as the quadcopter loses some of its controllability. This is chiefly due to the fact that the tennis balls will only vary in weight from 57-300g. This is much lower than previously anticipated.

The two batteries in parallel will be used to provide power to the quadcopter and the servomotors of the retrieval mechanism. Control and power of the servomotors is regulated through the Arduino board. This is because it is a much easier connection process and the team overloaded and destroyed eight servos troubleshooting the original wiring set up.

The servomotors will be energized when the pilot flips the flap switch on the Spektrum DX-7 controller in between three positions. This gives the pilot better ability to land in situations where there are higher tennis ball concentrations.

As stated in the original system level design, the team recognized the fact that multiple gains and response rates would be necessary to maintain control and stability of the quadcopter midflight as variable payloads would change the center of the mass of the quadcopter. The team used the auxiliary two control knob to account for multiple gain and response rates. This will give the pilot greater control of the quadcopter depending upon the payload.

9.0.1.7 Special Topics – no changes

9.0.2.1 Manufacturing Process Plan – no changes

9.0.2.2 Analysis – no changes

9.0.2.3 Material and Material Selection – no changes

9.0.2.4 Component and Component Selection Process – no changes

9.0.2.5 Computer Aided Design Drawings – no changes

9.0.2.6 Test Procedure

The assembled quadcopter was tested on its ability to pick up and drop off as many tennis balls as it could under competition conditions. This was practiced until the pilot felt comfortable in any situation. The new switch implementation, specifically the variable gain control knob was used to account for the changes in the center of mass of the quadcopter.

9.0.2.7 Economic Analysis

The total expense of the project, excluding the donated materials, was $891.27. This increased from the team's original estimate due to overvoltage in the servomotors which caused 8 of them to burn out. This problem was fixed but it added an extra $143.83 to the project budget.

9.1 Construction Process

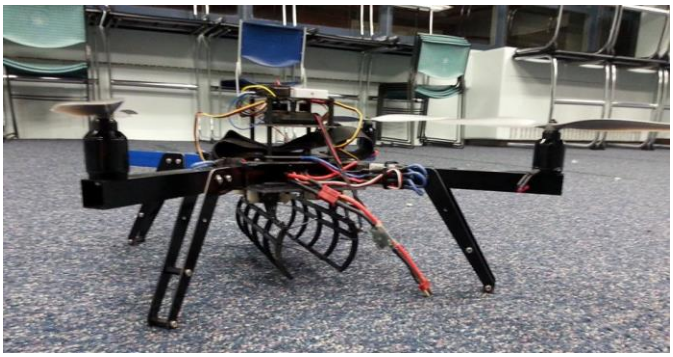

Figure 32: Assembled Quadcopter without Batteries

Figure 33: Fully Assembled Quadcopter and Spectrum DX-7 Controller

The construction process overall was rather simple due to the fact that the vast majority of the parts were made using a 3D printer. The team only had to find a way to put it all together. Most applications like this would call for nuts and bolts for assembly. However, when weight is crucial other considerations must be made. The team elected to utilize 3M industrial strength double-sided tape and JB weld to connect most of the assembly. A small sheet of acrylic plastic, of slightly larger dimensions than the bottom composite plate, was used to increase space for the four servomotors and decrease the distance between the bottom of the sidewalls and the ground. The manufacturing process plan was followed precisely with the only exception being the acrylic plate.

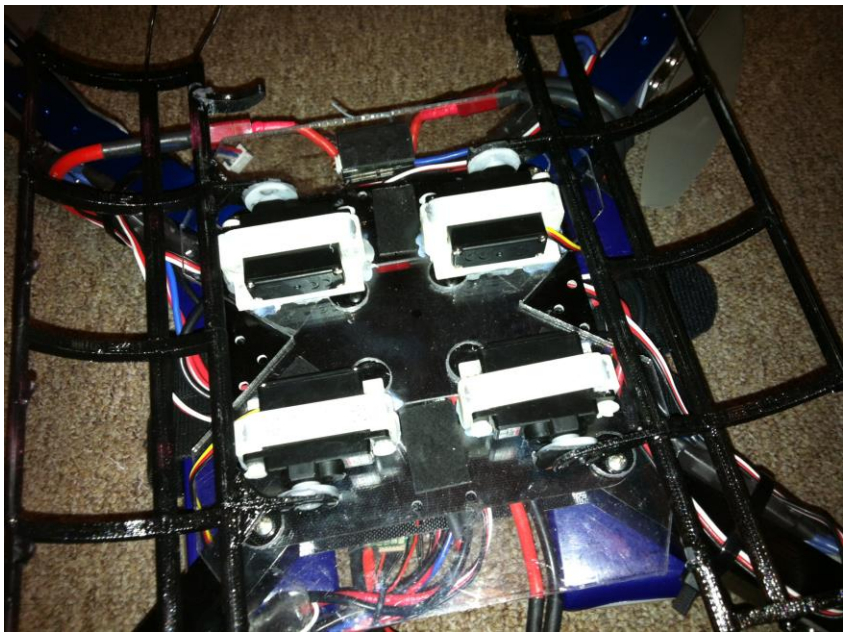

Figure 34: Close Up of Retrieval Mechanism

9.1.1 Construction of Sidewalls

The sidewalls are each composed of 19 parts (refer to figures 23 and 33):

- 1 Vertical Component
- 2 Large Servo Arm Components
- 2 Large Components
- 4 Horizontal Components
- 2 Top Supports
- 2 Servo Arm Supports
- 4 Ball Supports
- 2 Steel Rods

All of the 3D Printed Components were made of ABS plastic. The main components of the sidewalls were essentially strung using the steel support rods. The parts were assembled using JB-Weld. They were also fixed the wheel of the servo motors in fashion as well. Originally the geometry of the teeth that the wheel is connected to was accounted for in the design of the Large servo motor arm components. However, the 3D printer did not have the accuracy to replicate this in real life. The connection hole was then bored out upon discovery. The team elected to JB-weld it instead and used the lip on the edge of the wheel to its advantage. In hindsight, the team should have searched for a longer screw of similar geometry and a washer in addition to the JB-weld to give this connection more support as the JB-weld failed during competition. The composite construction of the sidewalls not only ensured more than enough of the strength necessary to carry the tennis balls but was also much lighter in comparison to other designs.

9.1.2 Construction of Brackets

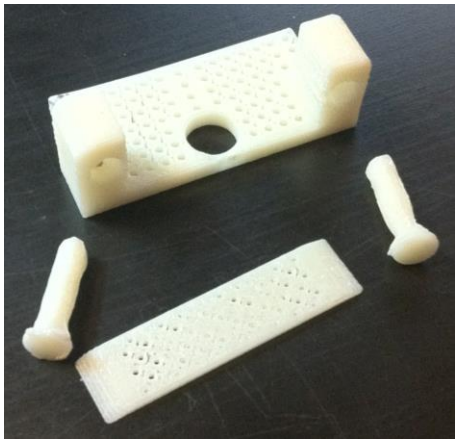

Figure 35: Bracket Assembly

The brackets were 3D printed and they were composed of four separate components that were JB-welded together: main bracket, top bracket plate, and two plugs. The plugs ensured durability and were a redundant feature during flight. The bracket assembly was JB-welded to the acrylic plastic plate attached to the frame.

9.1.3 Construction of Servomotors

The servomotors were JB-welded to the sidewalls and then placed inside the bracket assemblies. Two plugs were inserted through the two bolt holes on each servomotor and the top bracket plate was then JB-welded to the main bracket, fixing the motor in place from all directions. Then, the brackets, servomotors, and sidewalls were place into equidistant positions on the acrylic plastic plate. Their locations were marked and then they were fixed in place with JB-weld.

During testing two of four servomotors burned out due to voltage overload and they were turned into pivot points. This was done by removing four screws and disassembling the servomotor's body. The gears were then extracted and the body was reassembled.

9.1.4 Construction of Acrylic Plastic Plate

To ensure simplicity in the circuit design, the team elected to remove a set of y-splitters. This unfortunately changed the orientation of two servomotors and extra spacing on the bottom composite plate was necessary. Unfortunately, there was none. So, one of the team members found the lightest material that they could, that would still be strong enough to support the retrieval mechanism, which turned out to be a sheet of acrylic plastic. This was then cut down using to the necessary shape and dimensions by using a band saw. Then twelve holes were drilled to allow for the access for the screw on the bottom of the composite plate. The acrylic plastic sheet was then fixed to the composite plate using 3M industrial strength double-sided tape. The strength of just one square-inch of the double sided tape could hold ten pounds. Six square inches were used. This was evenly distributed across the plate to account for variable payloads, crash landings, and to simply over strengthen the connection. The acrylic plate also shortened the distance between the bottom of the sidewalls and the ground, which allowed for more efficient retrieval of the tennis balls.

9.2 Test Results and Discussion

The flight system and the retrieval system were tested individually during the construction; and then another test was implemented on the integrated system. Below are the results of the tests performed on each system.

9.2.1 Flight System Test Results and Discussion

The team calibrated the quadcopter by testing different proportional-integral-derivative (PID) values. If the P value, also known as the response rate of the motors, is too high, the system can become unstable. So, the P value was adjusted every time the team made a significant weight change to the system because this changed the system's center of mass and therefore effected the

pilot's ability to control the vehicle. After several tests, the team finalized the P value range to be from 0.05 - 0.17 and the D value, the amount in which the motors respond, to be 0.0215 to make a stable flight with three batteries and no extra payload. The P value range was adjusted via the auxiliary 2 knob (which is a dial); the higher P values are for lesser payloads and the lower P values are for higher payloads. A lower P values is desired for a heavier payload because the center of mass is now lower. One would think that a higher P value is necessary because the system becomes for of a pendulum and is inherently more stable. The team originally thought this too but was proved to be incorrect. It becomes more of a control issue when more weight is added. The rate at which the vehicle responds needs to be less when more weight is added to ensure stability.

Another test of the flight system was conducted to estimate how accurate the quadcopter would be able to land on a desired tennis ball. During this test, the team found another issue, downwash. Originally, the team put a regular tennis ball, which is about 57g on the floor and as the quadcopter flew towards the tennis ball, the downwash generated by four sets of motors and propellers pushed it away; this prevented the quadcopter to land over the tennis ball. The team again tested the downwash using a much heavier ball, which is about 450g, but the downwash did not seem to be an issue for the heaver balls. To address the downwash issue, the team later concluded that if the pilot wanted the quadcopter to pick up a regular ball, they would fly to a position directly above the ball and then descend the quadcopter slowly and land on the ball. Meanwhile, if the quadcopter is going to pick up a heaver ball, the polite will directly fly towards the ball and land on it. During practice, another serious problem was discovered. One of the motors stopped running during flight. The team examined all the parts in the flight system and found a loose connection between the power distribution board and one Electronic Stability Controller (ESC). Because of the limited time the team had, a new power distribution board was ordered to replace the one that was being used. Unfortunately, even after this fix the problem still occurred. Therefore it was determined that there was an issue in the firmware. The team concluded that before each practice and the competition that the firmware had to be re-uploaded into the Arduio board to ensure safe flight. This was a short term fix to the problem, as neither the sponsors nor the team could determine the root cause of the issue. Fortunately, this fix worked on the day of the flight competition and helped the team win.

9.2.2 Retrieval System Test Results and Discussion

The team designed the retrieval system to be operated by four servos, to perform the function of opening and closing in order to capture tennis balls of varying weight. Another team member, a computer science major, programmed this function in the Arduino's autopilot software. When the code was uploaded to the ArduPilot Mega (APM) board, the assigned output pin sent out a pulse width, which commanded the servos to move to the pre-specified positions of 0, 45, and 90 degrees. Initially, when the team tested the code, the dial on the controller (operated by channel auxiliary 2) was used at the remote to operate the servos. As tested, all servos were running

synchronously which was beneficial to the retrieval system. To have two servos on each side with a sidewall attached, the team figured that having two servos on the same side should have their gears lined up and facing the same direction. This was the same for the two servos on the other side, but in the opposite direction compare to the other side (illustrated in Figure 33). The team accidently burnt out four servos during a test and considered the possibility that the accident was caused by using a diode. Unfortunately, the diode was not able to work with the servos correctly and could have destroyed the internal structure. The team used a ternary switch on the controller and hoped to solve the problem, but it was unsuccessful. As eight of the servos were burnt, the team only had two servos left to complete the competition. After many discussions, the team believed that the cause was not on the control, so the ternary switch was used as a final set up. To match the design of the sidewalls, there has to be two servos on each side in order to control the extension of the sidewalls that are attached. The team took two burnt servos and extracted their internal gears to allow them to spin freely and act as pivot points. Therefore, for each side wall, there would be one functioning servo and one pivot point to evenly distribute the weight of the payload in the vertical direction. This set up has both pros and cons. The benefit to having only two servos was the batteries were able to last longer, but two servos might not have enough torque to carry the payload the team wanted. Thankfully, the servos provided enough torque to pick up every ball that the pilot wanted to retrieve and allowed the team to win the competition.

9.2.3 Integrated System Test Results and Discussion

After the team tested the flight system and the retrieval system separately, they had the integrated tests. As discussed in the section 9.2.2, the team burnt eight of their servos and tried to figure out the source of the issues. The problem could have been a result of using the diode to control the servos, using two different types of battery or a voltage overload. However, they eliminated the cause of using diode control by switching to ternary control, but the new servos burnt as well. Then, they tested using only a LiPo battery and servo responded properly. Next, the team measured the current when only the NiMH battery was connected in the system. The result was the same as just measuring the voltage of the battery, which was 5.04V and therefore below the rated voltage of 6V. Again, the voltage was measured with both LiPo and NiMH wired in the system. It was still 5.04V and no overload. All the tests they have completed did not give an explanation, so they chose the basic but risky module and use the Arduino board to power two servos. This way worked fine for integrating the system. However, the max output current is limited to 500mA, which would limit the weight that two servos can pick up. The team started their tests trying to pick up a light tennis ball, which is 57g, and demonstrated the ability to pick up and carry the ball. Then, they repeated the test on a heavy ball weighing about 450g and also received a positive result. After picking up two balls, with a total weight of approximately 700g, and given no other issues, the quadcopter hovered at an altitude of roughly 3.5 feet.

10.0 Conclusions and Recommendations

10.1 Competition summary

The first competition consisted of each of the three teams picking up as many tennis balls from the fifteen foot diameter corral and transporting them fifty feet without touching the ground, into a standard three foot tall two feet diameter trash can in a fifteen minute time frame. Team QUAD was the first team to go and managed to pick up two tennis balls of medium weight. Team Hella-Kitty was scheduled to compete next but ran into firmware and connection issues. So they elected to receive a five minute penalty to fix their vehicle. Team S.W.A.G. competed while team Hella-Kitty was fixing their quadcopter. They managed to transport four tennis balls of the heaviest weight to the destination, however only two managed to make it into the trashcan.

The JB-Weld connecting one of the servomotors to its sidewall managed to come off. The team believes that this was due to temperature effects and not enough adhesive between the two surfaces. The computer scientist then disabled the one servo motor so that only one of the servomotors could operate and move a side wall. The other sidewall was affixed in the vertical position so that the mechanism could still act as a claw. This was done with tape and zip ties. The fact that the effective payload capture area was cut in half and that the zip ties also reduced retrieval efficiency made piloting much more difficult. After this was done Team Hella-Kitty had only ten minutes to complete the same achievement that team S.W.A.G did in a fifteen minute time frame. The team was able to transport four of the heaviest tennis balls to the drop off location. Only two of them made it into the bucket, one bounced off of the rim and out of the bucket, and one missed by a few inches. Team Hella-Kitty's retrieval mechanism and piloting far exceeded that of its competitors as their effective capture areas were smaller, their mechanisms were more complex, and their pilots weren't as confident in their abilities.

Even though Team Hella-Kitty was clearly better able to complete the task of the competition, the competition was based on points so Team Hella-Kitty and Team S.W.A.G. entered into sudden death. This consisted of a five minute time constraint but with the removal of the lightest tennis balls from the ball corral as no pilot chose to retrieve them due to downwash issues. Team S.W.A.G. started first, they managed to transport three heavy tennis balls to the drop off location with two making it into the bucket. Team Hella-Kitty managed to transport five tennis balls to the drop off location, with two clearly making it into the bucket, two narrowly missing, and one where the pilot landed the copter on the bucket to ensure the delivery of the winning tennis ball into the bucket. The judges refused to make a verdict on the final tennis ball. The parameters of the competition stated that the ground was off limits, but that the pick-up and drop off zones were safe. Team Hella-Kitty is confident that it won the competition.

The quadcopters and the ball corral are illustrated in Appendix G.

10.2 Project Conclusion and Recommendations

The team believes that many processes in the project could have been made much simpler. The initial designs were complex, with multiple points of failure. The team continued refining their ideas until ending up with a very simple design that functioned very efficiently. It was easy to pick up not only one, but many balls at once, and it did so very quickly, much more quickly than its competitors.

Initially the team's design included two different types of batteries. Two LiPo batteries were used to power the Arduino board and the ESCs. One NiMH battery was used to power the servomotors; however, the control signal for the servomotors was powered by the LiPo battery. This may have been the reason that many of the servomotors overloaded and failed. The team would recommend against mixing battery types if possible, due to the fact that no more servomotors failed after eliminating the NiMH battery.

Despite an already simple design, the team ended up running into more issues which forced them to simplify it even further. As everything became simpler, troubleshooting became easier. By the day of the competition, the team was very conscious of all the points of failure on the quadcopter. This knowledge is what allowed the team to successfully identify and remedy all of the problems that came up during the competition. The team may not have been as successful with a more complex design. Keeping designs and component interaction is one of the most important aspects of design and the team would highly recommend following this practice to anyone who attempts to reproduce this project.

An extremely useful utility for this project was the Mission Planner software. This software is extremely powerful and allows for extreme customization of the quadcopter, but a lot of the features are easy to overlook. Paying more attention to Mission Planner from the beginning could have helped the team to better understand all of the capabilities of the quadcopter. The team was able to utilize two of the extra channels to control the servomotors and the gains of the quadcopter in real-time. With further understanding the team believes more could have been done.

11.0 Self-Assessment (Design Criteria Satisfaction)

11.1 Customer Needs Assessment

Self –Assessed Rating (Scale 1-10): 9

The quadcopter retrieval mechanism met all of Boeings requirements. These requirements resided in function, cost, and ease of operation of the quadcopter and its retrieval mechanism. The specific details of each requirement are listed below:

Function

- Ability to pick up varying weights
- Only operating off of LiPo 11.1v Batteries
- Protects the cargo

- Remote control operated
- Ease to manufacture
- Least costly

Cost

- The design, parts and manufacturing stayed under $1000

Ease of Operation

- The quadcopter retrieval mechanism operates on an extra switch found on the controller
- The retrieval mechanism was tested multiple times under different situations before competition
- Real time gains control was utilized via a second switch on the controller

During competition, like the other teams, team Hella-kitty ran into trouble with the firmware. This caused instability issues but it was eventually overcome by re-uploading the firmware. Additionally temperature effects caused a reduction in the shear strength of the JB-weld securing one of the sidewalls to one of its servomotors. This obstacle was overcome by disabling those servomotors and fixing that sidewall in the vertical position. The team relied on the strength of the other servos to complete the competition. Fortunately, this worked, and team Hella-kitty won the competition between the other two Boeing quadcopter teams.

11.2 Global and Societal Needs Assessment

Self –Assessed Rating (Scale 1-10): 9

Safety was the main societal need of the requirements. High speed blades, highly sensitive batteries, and the risk of parts flying off the quadcopter were of the highest concern. These were addressed by the blades being secured to the motors and batteries being monitored throughout charging and operation. The parts on the quadcopter and retrieval mechanism were over-engineered to handle high stresses on the retrieval mechanism and quadcopter itself. The connections to the quadcopter and servomotors were of particular concern.

References

Patents

1. Jermyn, Phillip M. *Flying Apparatus*. N.p.: U.S. Patents, 2010. N. pag. Web. 26 Sept. 2013. <http://www.uspto.gov/inventors/patents.jsp>.
2. Swinson, Jonny. *Horixontal and Vertical Take Off and Landing Unmanned Aerial Vehicle*. N.p.: U.S Patent, 1999. N. pag. Web. 26 Sept. 2013. <Jermyn, Phillip M. Flying Apparatus. N.p.: U.S. Patents, 2010. N. pag. Web. 26 Sept. 2013. <http://www.uspto.gov/inventors/patents.jsp>.
3. Takahashi, Ryoichi. *Motor Control Circuit*. N.p.: U.S. Patent, 2013. N. pag. Web. 26 Sept. 2013. <http://www.uspto.gov/inventors/patents.jsp>.
4. Tellenaero, Donald J. *Helicopter Sling Load Stability Control and Release System*. N.p.: U.S. Patent, 2013. N. pag. Web. 26 Sept. 2013. <http://www.uspto.gov/inventors/patents.jsp>.
5. Cruce, Christopher J. *Golf Ball Picker Basket and Method*. N.p.: U.S. Patent, 2012. N. pag. Web. 26 Sept. 2013. <http://www.uspto.gov/inventors/patents.jsp>.
6. Gress, Gary R. *VTOL Aircraft Control Using Opposed Tilting of its Daul Propellers or Fans*. N.p.: U.S. Patent, 2004. N. pag. Web. 26 Sept. 2013. <http://www.uspto.gov/inventors/patents.jsp>.
7. John, H W. *Golf Accessory*. N.p.: n.p., 1929. Web. 26 Sept. 2013.

Pictures

1. *CH-47D/F Chinook*. N.p.: Boeing, n.d. Web. 26 Sept. 2013. <http://www.boeing.com/boeing/rotorcraft/military/ch47d/>.
2. Dangel, Jason. *Training on the Flying Crane*. N.p.: Boeing, n.d. Web. 26 Sept. 2013
3. "Center of Mass ." *Hyperphysics*. Hyperphysics, n.d. Web. 8 Nov. 2013. <http://hyperphysics.phy-astr.gsu.edu/hbase/cm.html>.

Appendix A. Gantt Chart

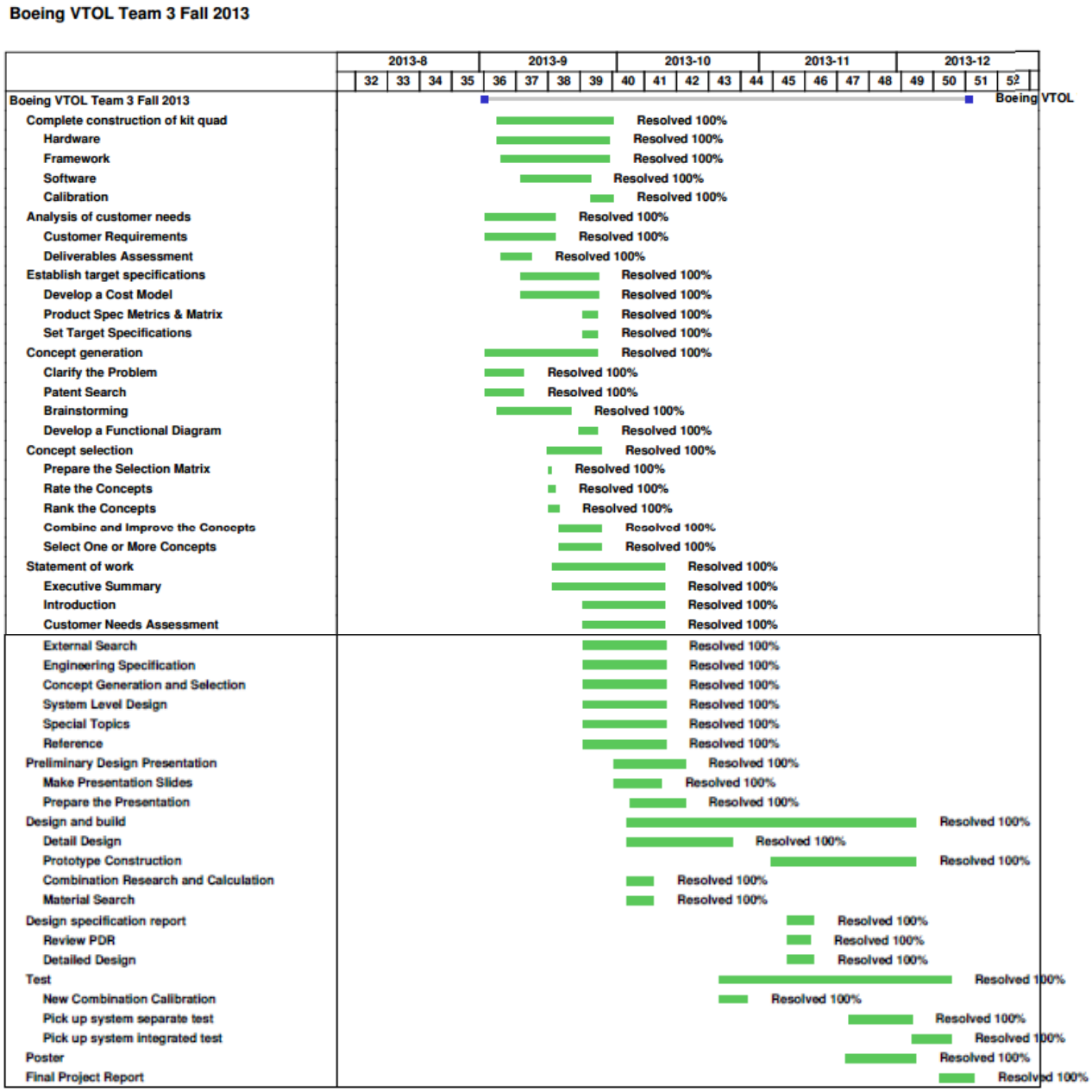

Figure 36: Gantt Chart

Appendix B: Analysis

Appendix B.1 FEA Analysis

Illustrated below is the FEA for an applied 3kg force, with a displacement of 2.95612mm:

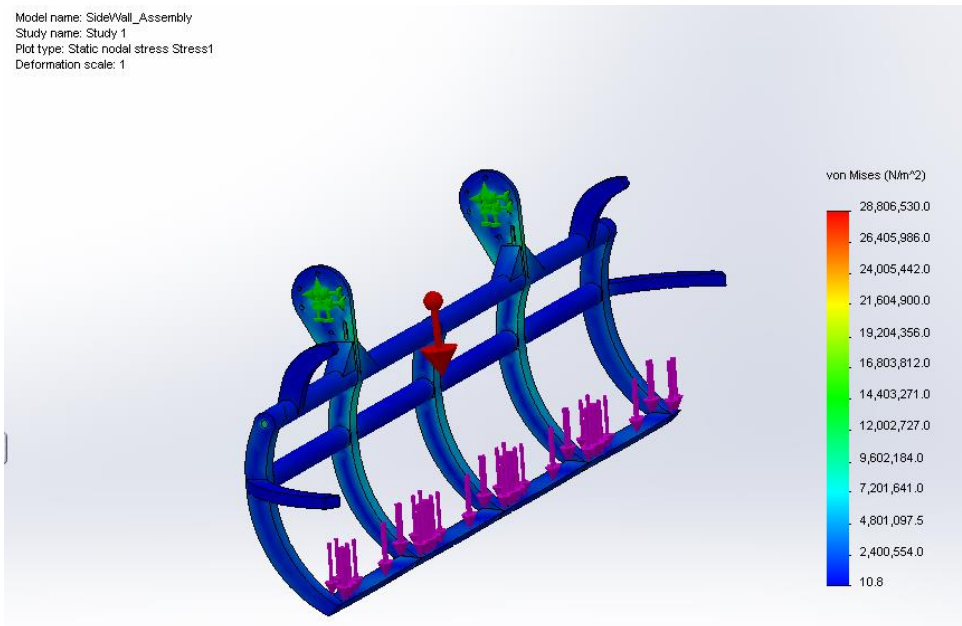

Figure 37: Von Mises Stress

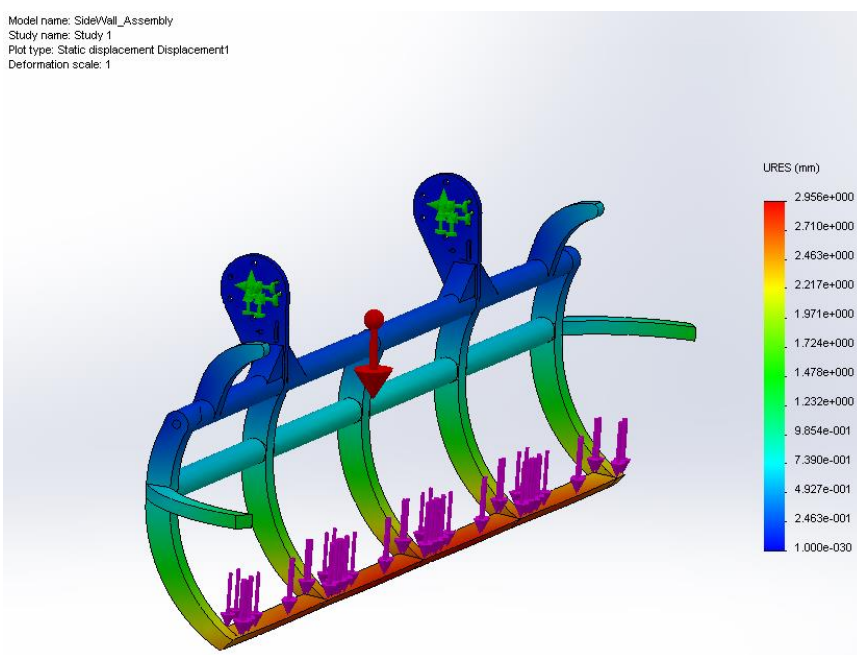

Figure 38: Deformation

Illustrated below is the FEA for an applied 2kg force, with a displacement of 1.87206 mm:

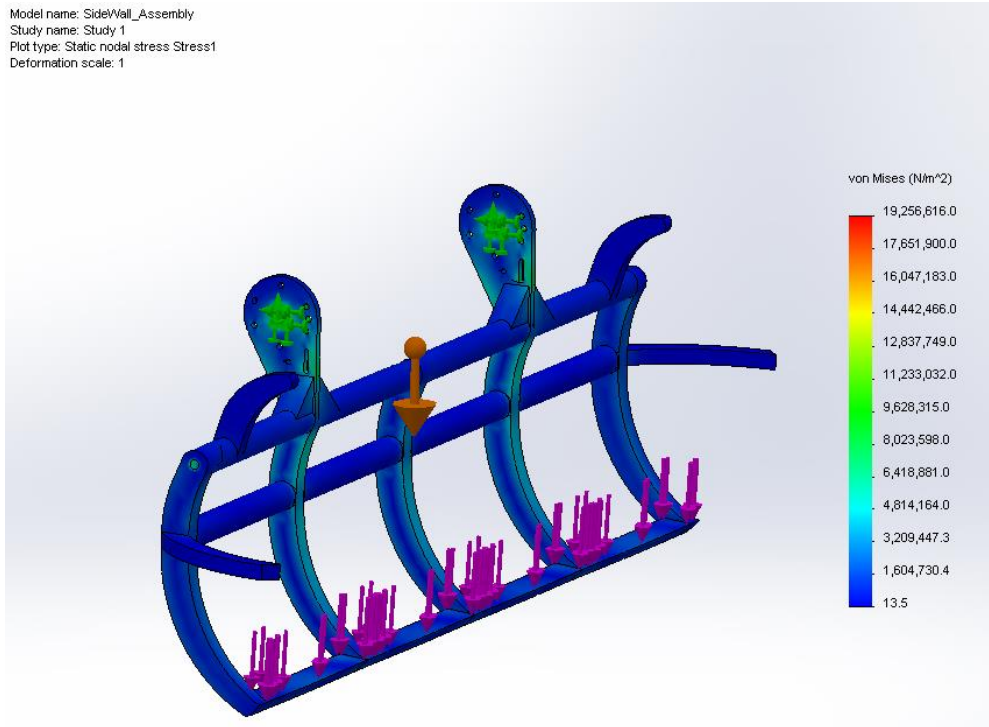

Figure 39: Von Mises Stress

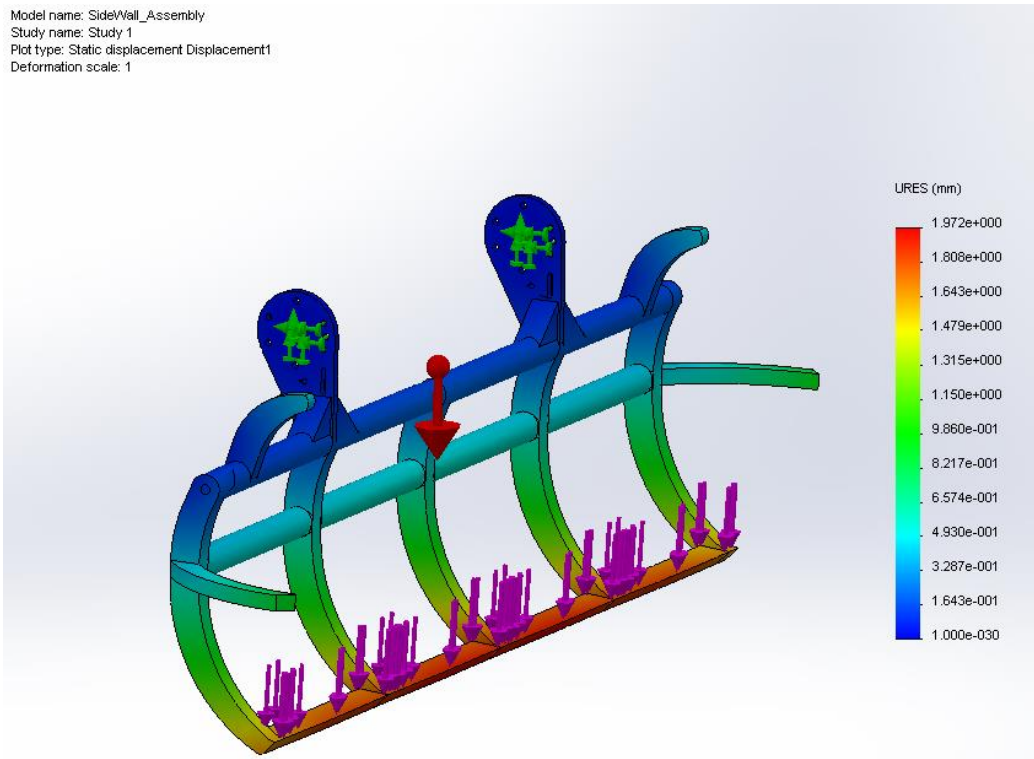

Figure 40: Deformation

Illustrated below is the FEA for an applied 1kg force, with a displacement of 0.98011mm:

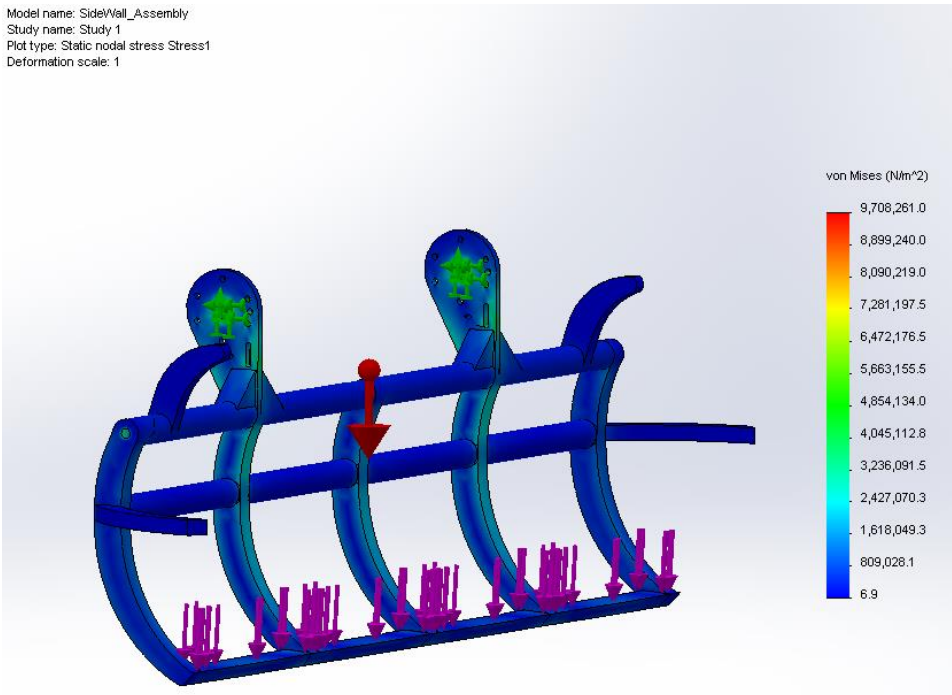

Figure 41: Von Mises Stress

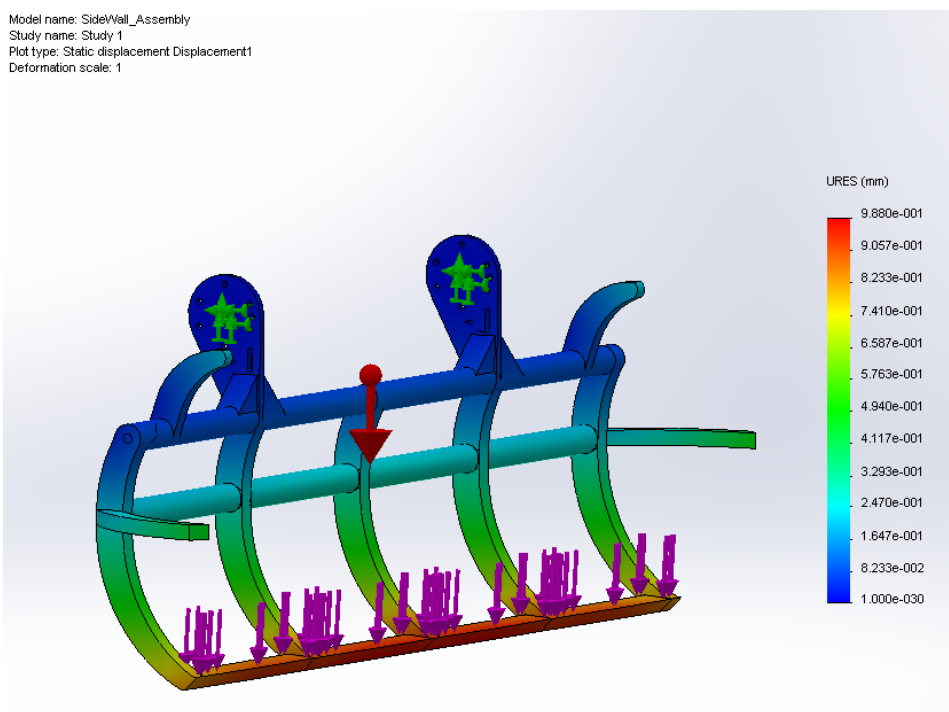

Figure 42: Displacement

Illustrated below is the FEA for an applied 0.171kg force, simulating 3 regular tennis balls, with a displacement 0.172225mm:

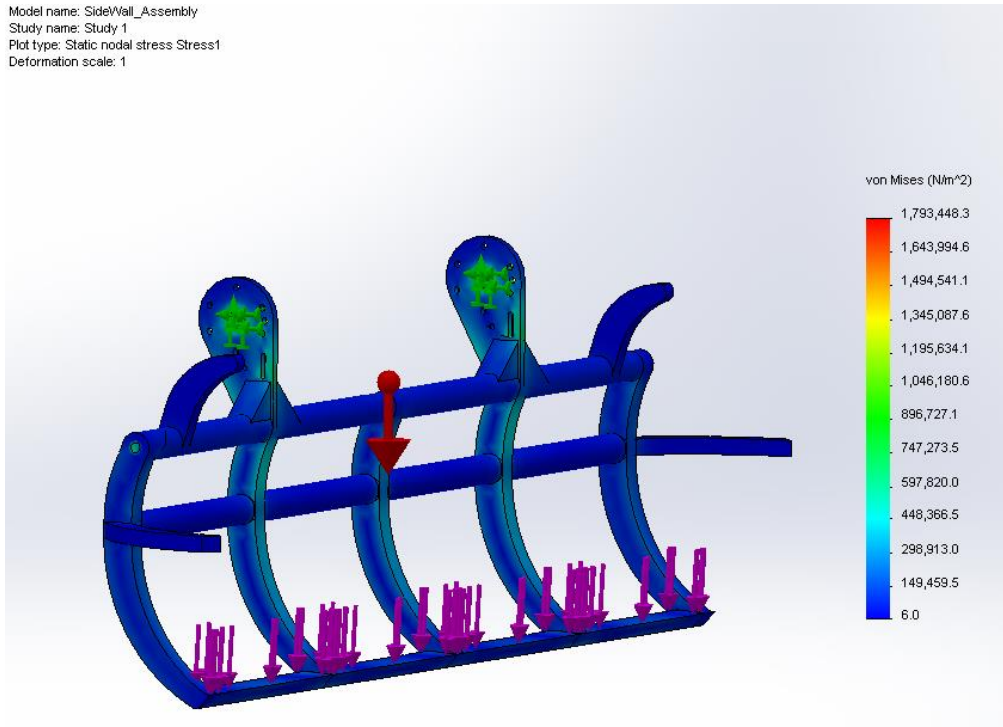

Figure 43: Von Mises Stress

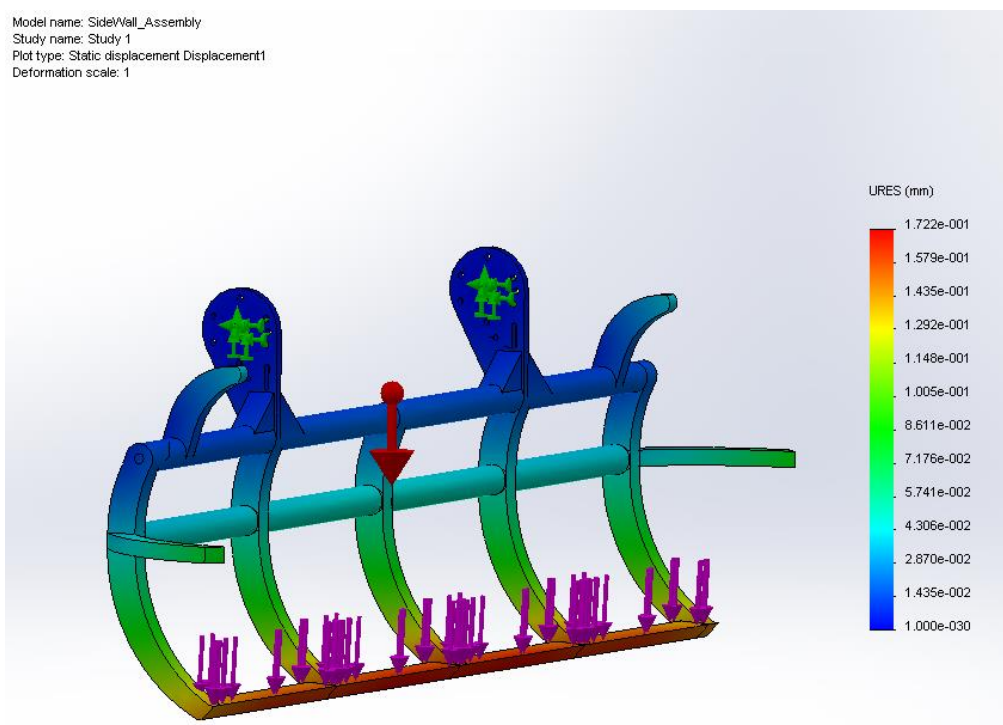

Figure 44: Deformation

Illustrated below is the FEA for an applied 2kg force, with a displacement 0.7989mm:

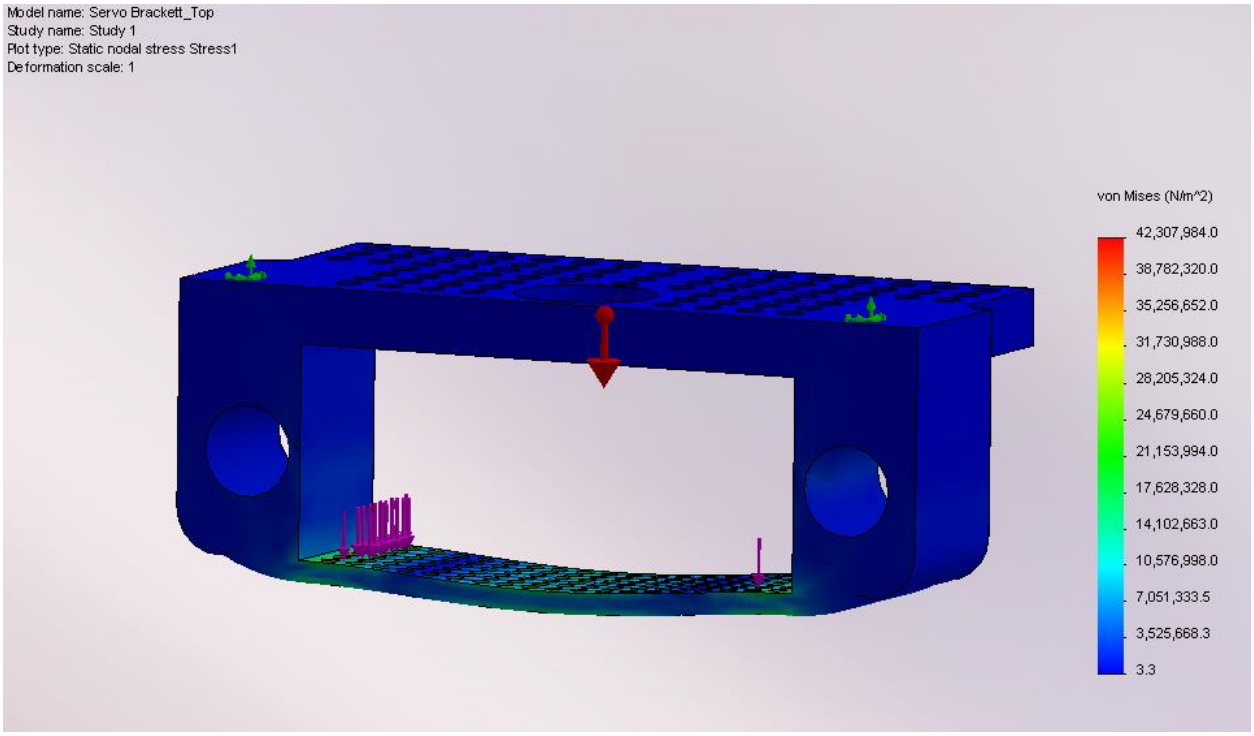

Figure 45: Von Mises Stress

Illustrated below is the FEA for an applied 1.2 kg force, with a displacement of 0.4974mm:

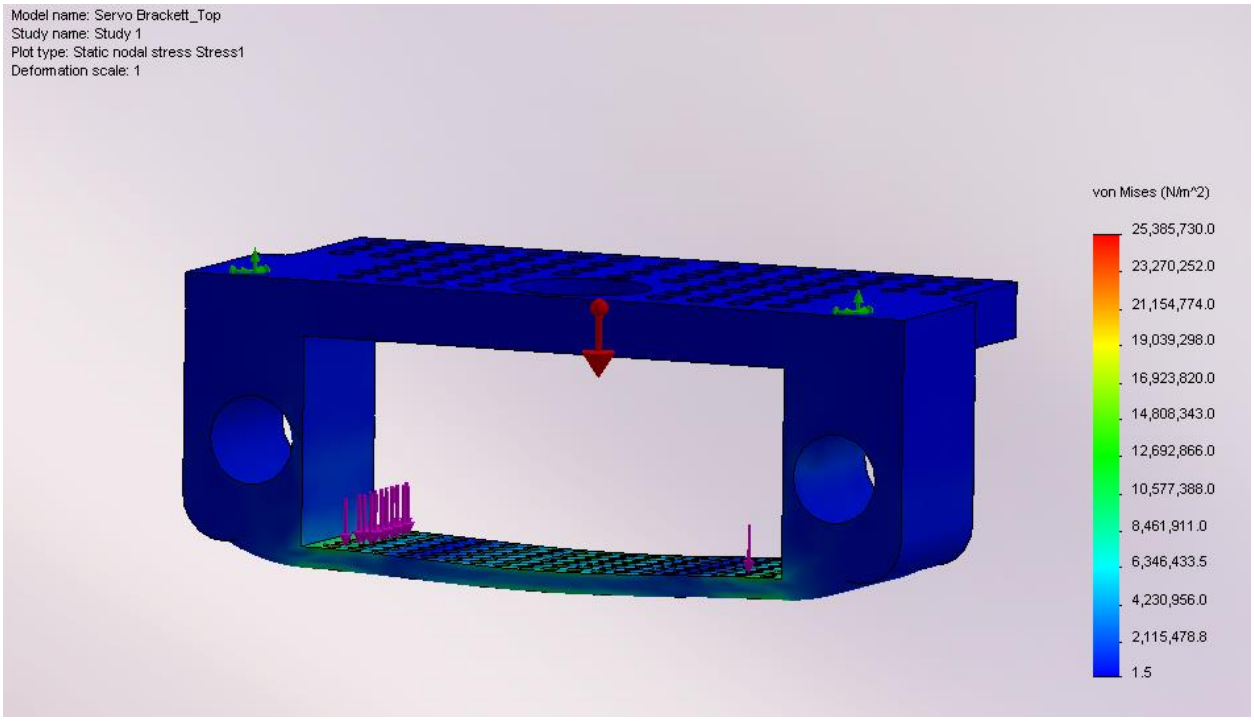

Figure 46: Von Mises Stress

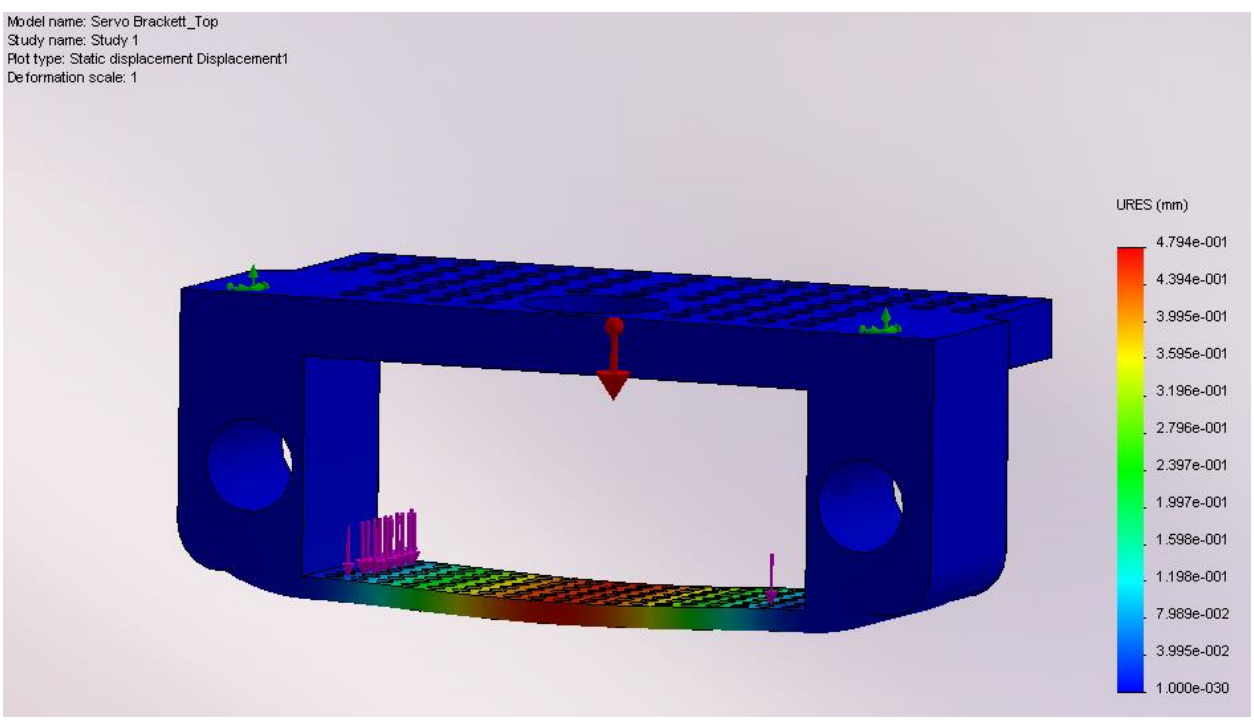

Figure 47: Displacement

Illustrated below is the FEA for an applied 0.171kg force, simulating 3 regular tennis balls, with a displacement 0.0684mm:

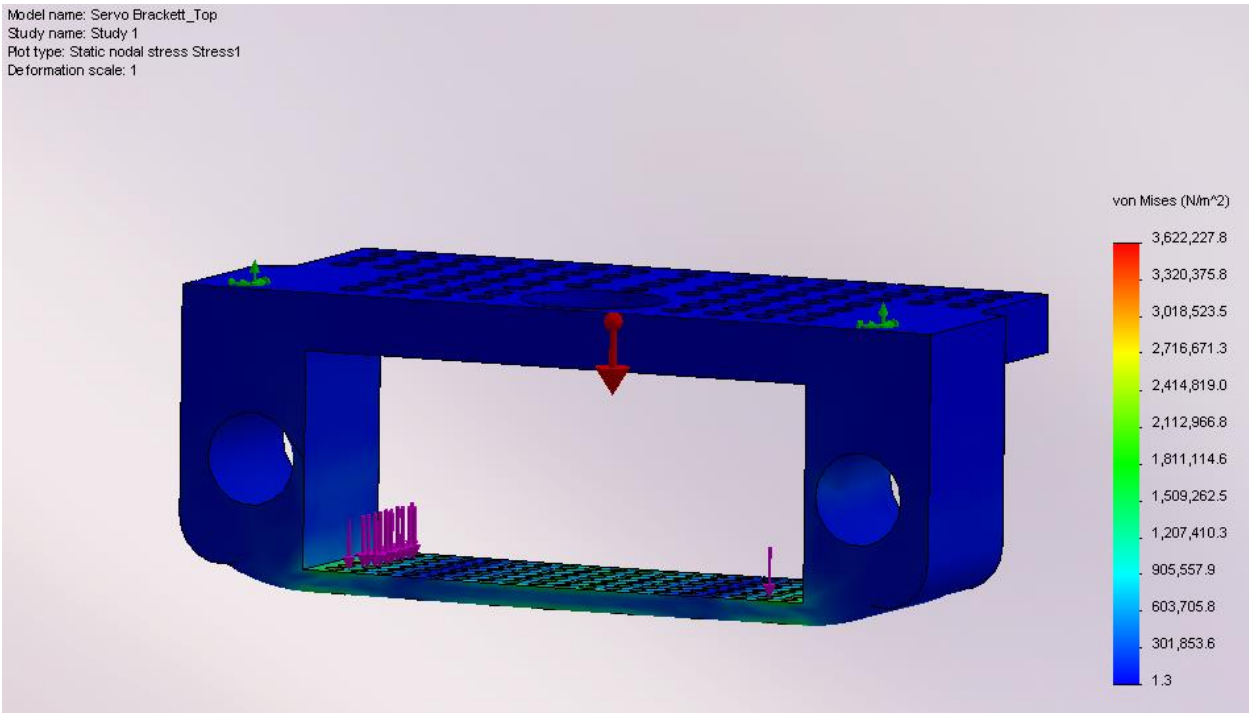

Figure 48: Von Mises Stress

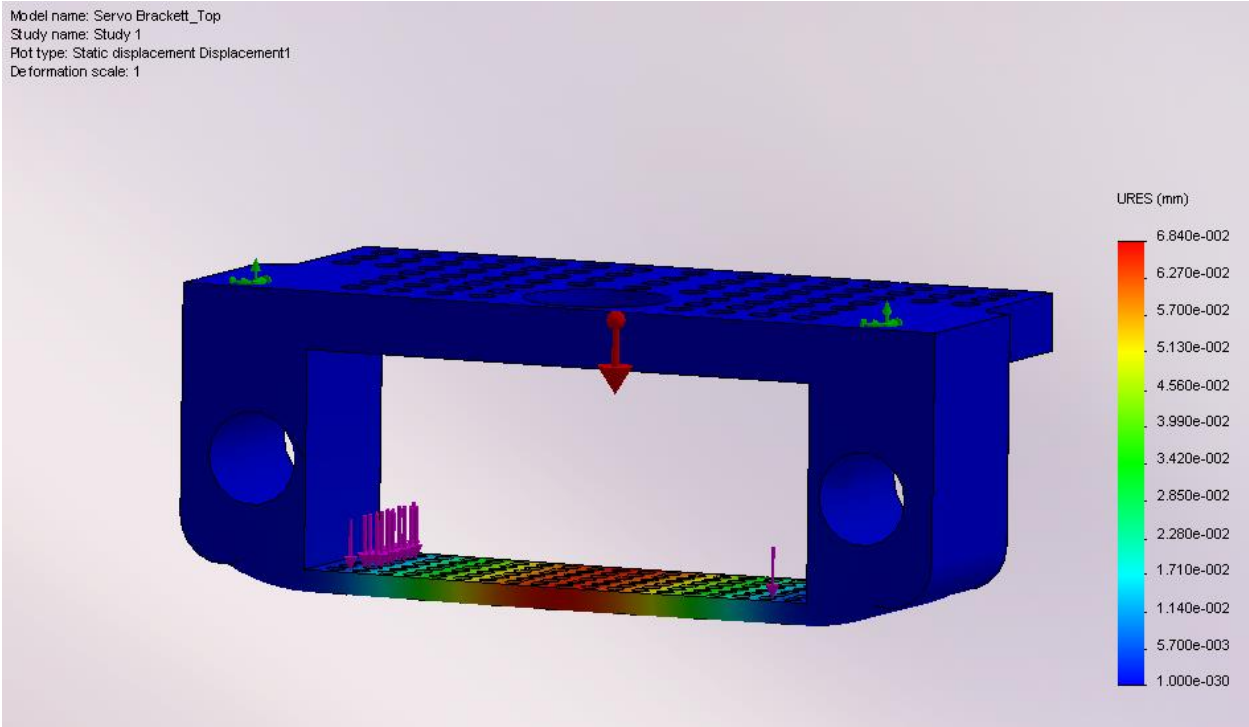

Figure 49: Displacement

Appendix B.2 Center of Mass Calculations

Table 15: Center of Mass SolidWorks Calculation for Multiple Payload Configurations

	Centers of Mass (mm)						
COM	**No Load**	**1 Normal**	**1 Heavy**	**2 Normal**	**2 Heavy**	**3 Normal**	**2 Norm 1 Heavy**
X	-0.04	-0.02	-0.03	-0.01	-0.04	-0.02	-0.04
Y	26.18	19.83	-1.07	14.47	-13.56	9.66	-14.73
Z	-0.08	-0.17	-0.57	-0.26	-0.54	-0.53	-0.73
Total Mass	1756.92	1921.86	2767.2	2086.81	3777.49	2251.76	3942.44

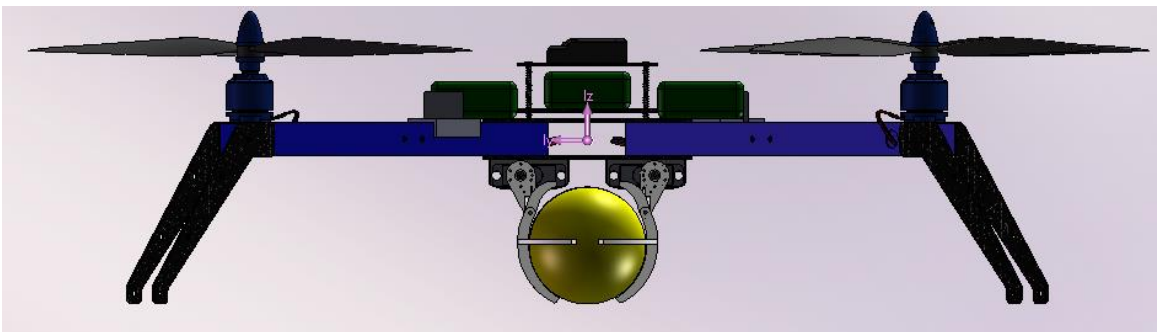

```
Mass properties of Hella_Kitty_No Load
   Configuration: Default
   Coordinate system: -- default --

Mass = 2251.76 grams

Volume = 1249817.78  cubic millimeters

Surface area = 602300.79  square millimeters

Center of mass: ( millimeters )
     X = -0.02
     Y = 9.66
     Z = -0.53

Principal axes of inertia and principal moments of inertia: ( grams *  square millime
Taken at the center of mass.
     Ix = (-0.03, 0.01, 1.00)     Px = 17616160.08
     Iy = (1.00, -0.00, 0.03)     Py = 19041676.42
     Iz = (0.00, 1.00, -0.01)     Pz = 30217496.85

Moments of inertia: ( grams *  square millimeters )
Taken at the center of mass and aligned with the output coordinate system.
     Lxx = 19039979.45          Lxy = -4324.23          Lxz = -49151.52
     Lyx = -4324.23             Lyy = 30217071.79       Lyz = 73055.29
     Lzx = -49151.52            Lzy = 73055.29          Lzz = 17618282.1

Moments of inertia: ( grams *  square millimeters )
Taken at the output coordinate system.
     Ixx = 19250780.24          Ixy = -4729.89          Ixz = -49129.08
     Iyx = -4729.89             Iyy = 30217715.26       Iyz = 61433.44
     Izx = -49129.08            Izy = 61433.44          Izz = 17828441.00
```

Figure 50: SolidWorks Center of Mass Calculation for 3 Ball Payload

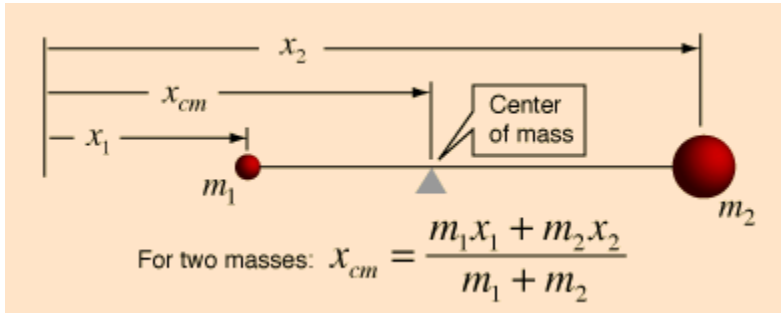

Figure 51: Equation used for COM Hand Calculations [3]

Table 16: Center of Mass Hand Calculations

	Center of Gravity Calculations									
Position (mm)	Origin	Battery 1 Front	Battery 1 Middle	Battery 1 Back	Battery 2 Front	Battery 2 Middle	Battery 2 Back	Battery 3 Front	Battery 3 Middle	Battery 3 Back
mass (kg)	37.6	0.11	0.11	0.11	0.11	0.11	0.11	0.11	0.11	0.11
x	0	63.37	63.37	63.37	0	0	0	-63.37	-63.37	-63.37
y	0	31.95	31.95	31.95	37.36	37.36	37.36	31.95	31.95	31.95
z	0	77.5	0	-77.5	77.5	0	-77.5	77.5	0	-77.5
COM_X		0.187642639	0.187642639	0.187642639	0	0	0	-0.187642639	-0.187642639	-0.187642639
COM_Y		0.094606002	0.094606002	0.094606002	0.110625359	0.110625359	0.110625359	0.094606002	0.094606002	0.094606002
COM_Z		0.229482477	0	-0.229482477	0.229482477	0	-0.229482477	0.229482477	0	-0.229482477

Servo 1	Servo 2	Servo 3	Servo 4	Motor (w/Prop) 1	Motor (w/Prop) 2	Motor (w/Prop) 3	Motor (w/Prop) 4	Arduino	Side Wall Left/Front	Side Wall Left/Back	Side Wall Right/Front	Side Wall Right/Back
0.0203	0.02031	0.0203	0.0203	0.0841	0.0841	0.0841	0.0841	0.03	0.01606	0.01606	0.01606	0.01606
32.52	-32.52	-32.52	32.52	194.0339	-191.173	-191.173	194.0339	0	36	36	-36	-36
10.03	10.03	10.03	10.03	32.6	32.6	32.6	32.6	59.2107	47	47	47	47
33.132	33.132	-33.13	-33.13	199.9778	199.9778	-200.8335	-200.8335	0	54.087	-51.738	54.087	-51.738
0.0175	-0.0175	-0.018	0.0175	0.432710947	-0.426330914	-0.426330914	0.432710947	0	0.015331065	0.015331065	-0.015331065	-0.015331065
0.0054	0.00541	0.0054	0.0054	0.072753761	0.072753761	0.072753761	0.072753761	0.047204916	0.020066429	0.020066429	0.020066429	0.020066429
0.0179	0.01789	-0.018	-0.018	0.446292547	0.446292547	-0.448202222	-0.448202222	0	0.02309219	-0.022089296	0.02309219	-0.022089296

Ball 1	Ball 2	Ball 3	Open Mid Plate	Upper Plate	Top Plate	Bolt 1	Bolt 2	Bolt 3	Bolt 4	Landing Gear 1	Landing Gear 2	Landing Gear 3	Landing Gear 4	
0.057	0.057	0.057	24.84	13.36	13.36	1.9	1.9	1.9	1.9	11.94	11.94	11.94	11.94	
0	0	0	0	0	0	32	-32	-32	32	222	-222	-222	222	
-50	-50	-50	20.65	26.06	51.661	38	38	38	38	-30	-30	-30	-30	
106.479	0	-106.479	0	0	0	33.5	33.5	-33.5	-33.5	232	232	-232	-232	
														COM_SUM
0	0	0	0	0	0	1.612233	-1.612233	-1.612233	1.612233	70.28806293	-70.28806293	-70.28806293	70.28806293	0.012760067
-0.07568	-0.07568	-0.07568	8.215022422	6.832056515	13.54378	1.827848	1.827848	1.827848	1.827848	-7.230520791	-7.230520791	-7.230520791	-7.230520791	8.092774672
0.16117	0	-0.16117	0	0	0	1.611392	1.611392	-1.611392	-1.611392	55.91602745	55.91602745	-55.91602745	-55.91602745	-0.00181356

Appendix B.3: Flight Time Calculations

Table 17: Calculations for Normal, Mixed, and Loaded Flight Times

	motor		motor weigh	battery number	pro	pro weight	ESC (A	ESC weigh	payload	Kg	efficiency @ hover	efficiency @ max	flight(min)	mixed flight (min)	hr	hover (min	weight difference	mixed flight time difference	payload difference
Basic		850	52	2	10x4.7	11.9	20	21	749	0.749	77.50%	80.40%	11.3	15.3	0.255	37.4	0	0	0
Basic1		850	52	2	10x4.7	11.9	30	40	768	0.768	77.6	80.9	11.2	15.2	0.253333333	37.5	76	-0.1	19
Basic2		850	52	2	11x4.7	13.9	20	21	1196	1.196	76.2	77	8.8	12.6	0.21	40.5	8	-2.7	447
Basic3		850	52	2	11x4.7	13.9	30	40	1225	1.225	76.3	77.6	8.7	12.5	0.208333333	40.5	84	-2.8	476
Basic4		850	52	3	10x4.7	11.9	20	21	765	0.765	77.6	80.8	16.8	22.8	0.38	56.2	336	7.5	16
Basic5		850	52	3	10x4.7	11.9	30	40	784	0.784	77.7	81.4	16.6	22.6	0.376666667	56.2	412	7.3	35
Basic6		850	52	3	11x4.7	13.9	20	21	1221	1.221	76.3	77.5	13.1	18.8	0.313333333	60.7	344	3.5	472
Basic7		850	52	3	11x4.7	13.9	30	40	1251	1.251	76.3	78.1	12.9	18.5	0.308333333	60.8	420	3.2	502
AAA	Planet Hobby	2830-14 8	55	2	APC SF	11.9	20	21	663	0.663	75.3	79.8	12.1	16	0.266666667	36.3	12	0.7	-86
AAB	2830-14	830	55	2	10	11.9	30	40	674	0.674	75.3	79.9	11.9	15.9	0.265	36.4	88	0.6	-75
ABA	2830-14	830	55	2	11	13.9	20	21	1088	1.088	73.9	76.7	9.4	13.3	0.221666667	39.2	20	-2	339
ABB	2830-14	830	55	2	11	13.9	30	40	1103	1.103	73.9	76.8	9.3	13.1	0.218333333	39.3	96	-2.2	354
ACA	2830-14	830	55	3	10	11.9	20	21	677	0.677	75.4	80.2	18	23.9	0.398333333	54.5	348	8.6	-72
ACB	2830-14	830	55	3	10	11.9	30	40	688	0.688	75.4	80.3	17.7	23.6	0.393333333	54.7	424	8.3	-61
ADA	2830-14	830	55	3	11	13.9	20	21	1111	1.111	74	77.1	14	19.8	0.33	35.6	356	4.5	362
ADB	2830-14	830	55	3	11	13.9	30	40	1126	1.126	74	77.2	13.8	19.5	0.325	59	432	4.2	377
BAA	2830-12	980	55	2	10	11.9	20	21	1058	1.058	69.9	75.4	8.5	11.9	0.198333333	33.7	12	-3.4	309
BAB	2830-12	980	55	2	10	11.9	30	40	1091	1.091	69.9	75.6	8.3	11.7	0.195	33.8	88	-3.6	342
BBA	2830-12	980	55	2	11	13.9	20	21	1531	1.531	68.2	71.4	6.8	10	0.166666667	36.2	20	-5.3	782
BBB	2830-12	980	55	2	11	13.9	30	40	1579	1.579	68.2	71.5	6.7	9.8	0.163333333	36.2	96	-5.5	830
BCA	2830-12	980	55	3	10	11.9	20	21	1082	1.082	70	76	12.5	17.6	0.293333333	50.6	348	2.3	333
BCB	2830-12	980	55	3	10	11.9	30	40	1116	1.116	70	76.1	12.3	17.4	0.29	50.7	424	2.1	367
BDA	2830-12	980	55	3	11	13.9	20	21	1566	1.566	68.3	72	10	14.7	0.245	54.3	356	-0.6	817
BDB	2830-12	980	55	3	11	13.9	30	40	1616	1.616	68.2	72.1	9.8	14.5	0.241666667	54.4	432	-0.8	867
CAA	2834-10	870	70	2	10	11.9	20	21	927	0.927	75.1	82.8	9.9	13.7	0.228333333	36.2	72	-1.6	178
CAB	2834-10	870	70	2	10	11.9	30	40	956	0.956	75.1	83	9.8	13.5	0.225	36.3	148	-1.8	207
CBA	2834-10	870	70	2	11	13.9	20	21	1440	1.44	73.6	80.1	7.6	11.1	0.185	39	80	-4.2	691
CBB	2834-10	870	70	2	11	13.9	30	40	1484	1.484	73.6	80.2	7.5	10.9	0.181666667	39.1	156	-4.4	735
CCA	2834-10	870	70	3	10	11.9	20	21	948	0.948	75.2	83.4	14.7	20.3	0.338333333	54.4	408	5	199
CCB	2834-10	870	70	3	10	11.9	30	40	977	0.977	75.2	83.5	13.5	20.1	0.335	54.5	484	4.8	228
CDA	2834-10	870	70	3	11	13.9	20	21	1473	1.473	73.6	80.7	11.3	16.4	0.273333333	58.6	416	1.1	724
CDB	2834-10	870	70	3	11	13.9	30	40	1518	1.518	73.6	80.9	11	16.2	0.27	58.7	492	0.9	769
DAA	2834-9	980	70	2	10	11.9	20	21	1300	1.3	72.3	80.1	7.5	10.8	0.18	34.9	72	-4.5	551
DAB	2834-9	980	70	2	10	11.9	30	40	1342	1.342	72.3	80.9	7.4	10.6	0.176666667	35	148	-4.7	593
DBA	2834-9	980	70	2	11	13.9	20	21	1876	1.876	70.6	76.6	5.9	8.8	0.146666667	37.5	80	-6.5	1127
DBB	2834-9	980	70	2	11	13.9	30	40	1940	1.94	70.6	77.4	5.7	8.5	0.141666667	37.5	156	-6.8	1191
DCA	2834-9	980	70	3	10	11.9	20	21	1331	1.331	72.4	81.3	11.1	16	0.266666667	52.4	408	0.7	582
DCB	2834-9	980	70	3	10	11.9	30	40	1375	1.375	72.4	81.5	10.9	15.7	0.261666667	52.5	484	0.4	626
DDA	2834-9	980	70	3	11	13.9	20	21	1925	1.925	70.6	77.3	8.7	13	0.216666667	56.2	416	-2.3	1176
DDB	2834-9	980	70	3	11	13.9	30	40	1992	1.992	70.7	78.1	8.4	12.7	0.211666667	56.3	492	-2.6	1243
EAA	3536-9	890	103	2	10	11.9	20	21	1106	1.106	64.4	82.6	8.6	11.8	0.196666667	31	204	-3.5	357
EAB	3536-9	890	103	2	10	11.9	30	40	1141	1.141	64.3	92.9	8.4	11.7	0.195	31.1	280	-3.6	392
EBA	3536-9	890	103	2	11	13.9	20	21	1680	1.68	62.3	81	6.5	9.5	0.158333333	33.1	212	-5.8	931
EBB	3536-9	890	103	2	11	13.9	30	40	1736	1.736	62.3	81.3	6.4	9.3	0.155	33.1	288	-6	987
ECA	3536-9	890	103	3	10	11.9	20	21	1131	1.131	64.4	83.2	12.7	17.5	0.291666667	46.6	540	2.2	382
ECB	3536-9	890	103	3	10	11.9	30	40	1168	1.168	64.4	83.4	12.5	17.3	0.288333333	46.7	616	2	419
EDA	3536-9	890	103	3	11	13.9	20	21	1722	1.722	62.3	81.8	9.6	14	0.233333333	49.6	548	-1.3	973
EDB	3536-9	890	103	3	11	13.9	30	40	1781	1.781	62.3	82.1	9.4	13.8	0.23	49.7	624	-1.5	1032
FAA	3542-7	800	137	2	10	11.9	20	21	823	0.823	54.1	78.6	10.4	13.2	0.22	26.1	340	-2.1	74
FAB	3542-7	800	137	2	10	11.9	30	40	849	0.849	54.1	78.8	10.2	13.1	0.218333333	26.1	416	-2.2	100
FBA	3542-7	800	137	2	11	13.9	20	21	1328	1.328	51.8	79.6	7.9	10.8	0.18	27.5	348	-4.5	579
FBB	3542-7	800	137	2	11	13.9	30	40	1370	1.37	51.8	79.8	7.7	10.6	0.176666667	27.5	424	-4.7	621
FCA	3542-7	800	137	3	10	11.9	20	21	842	0.842	54.2	79.2	15.4	19.6	0.326666667	39.2	676	4.3	93
FCB	3542-7	800	137	3	10	11.9	30	40	869	0.869	54.1	79.4	15.2	19.4	0.323333333	39.2	752	4.1	120
FDA	3542-7	800	137	3	11	13.9	20	21	1360	1.36	51.9	80.3	11.6	16	0.266666667	41.3	684	0.7	611
FDB	3542-7	800	137	3	11	13.9	30	40	1403	1.403	51.8	80.5	11.4	15.7	0.261666667	41.3	760	0.4	654
GAA	3548-5	850	165	2	10	11.9	20	21	1099	1.099	51	79.9	8.6	11.3	0.188333333	24.6	452	-4	350
GAB	3548-5	850	165	2	10	11.9	30	40	1135	1.135	50.9	80.1	8.5	11.1	0.185	24.6	528	-4.2	386
GBA	3548-5	850	165	2	11	13.9	20	21	1688	1.688	48.6	80.9	6.5	9.1	0.151666667	25.8	460	-6.2	939
GBB	3548-5	850	165	2	11	13.9	30	40	1746	1.746	48.6	81.2	6.3	8.9	0.148333333	25.8	536	-6.4	997
GCA	3548-5	850	165	3	10	11.9	20	21	1125	1.125	51	80.5	12.8	16.8	0.28	36.9	788	1.5	376
GCB	3548-5	850	165	3	10	11.9	30	40	1162	1.162	50.9	80.8	12.5	16.5	0.275	36.9	864	1.2	413
GDA	3548-5	850	165	3	11	13.9	20	21	1732	1.732	48.7	81.8	9.6	13.4	0.223333333	38.7	796	-1.9	983
GDB	3548-5	850	165	3	11	13.9	30	40	1793	1.793	48.6	82.1	9.3	13.2	0.22	38.8	872	-2.1	1044
HAA	4240-12	850	127	2	10	11.9	20	21	1038	1.038	60.4	82.8	9.1	12.2	0.203333333	29.1	300	-3.1	289
HAB	4240-12	850	127	2	10	11.9	30	40	1071	1.071	60.4	83	9	12.1	0.201666667	29.2	376	-3.2	322
HBA	4240-12	850	127	2	11	13.9	20	21	1616	1.616	58.2	82.5	6.8	9.8	0.163333333	30.9	308	-5.5	867
HBB	4240-12	850	127	2	11	13.9	30	40	1669	1.669	58.2	82.8	6.7	9.6	0.16	30.9	384	-5.7	920
HCA	4240-12	850	127	3	10	11.9	20	21	1062	1.062	60.5	83.4	13.5	18.2	0.303333333	43.7	636	2.9	313
HCB	4240-12	850	127	3	10	11.9	30	40	1096	1.096	60.4	83.7	13.2	17.9	0.298333333	43.8	712	2.6	347
HAD	4240-12	850	127	3	11	13.9	20	21	1656	1.656	58.2	83.3	10.1	14.5	0.241666667	46.4	644	-0.8	907
HDB	4240-12	850	127	3	11	13.9	30	40	1711	1.711	58.2	83.6	9.9	14.2	0.236666667	46.4	720	-1.1	962

Appendix C. Detailed CAD Drawings

Appendix C.1: CAD Models

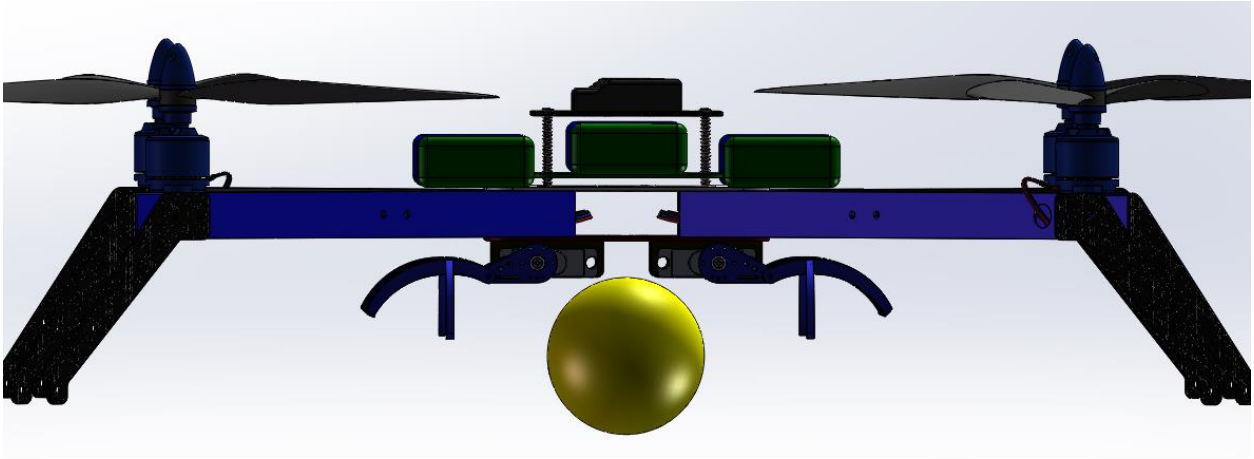

Figure 52: Front View of SideWalls/Retrieval Mechanism in Open Position

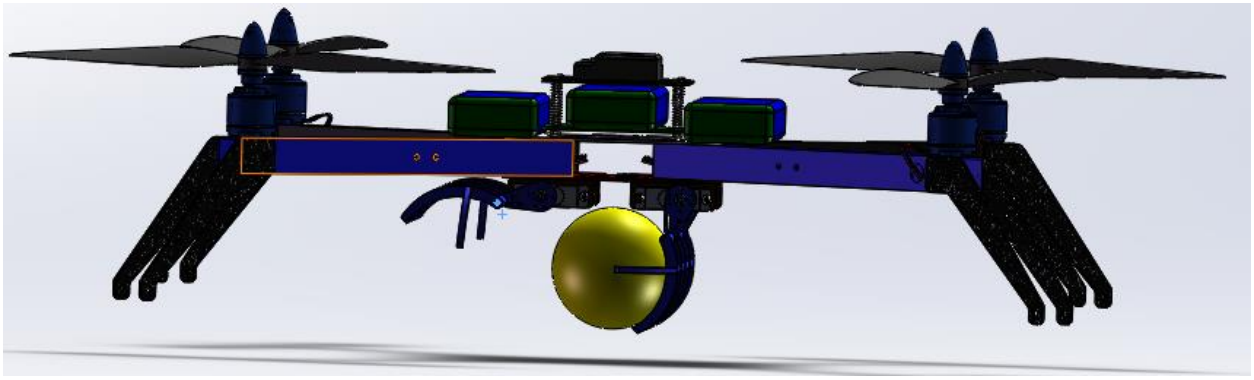

Figure 53: Isometric View of Alternated SideWall Positions

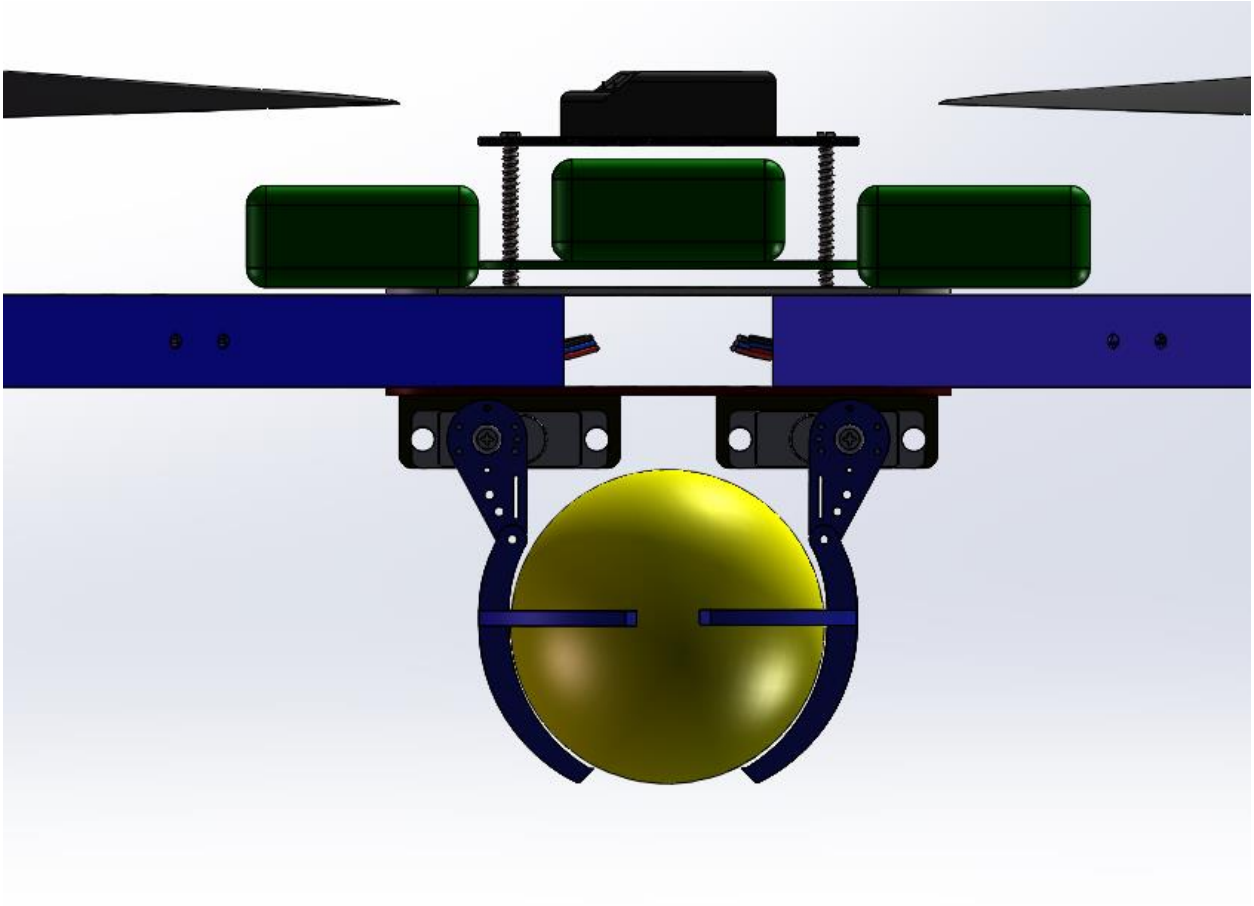

Figure 54: Front View of Retrieval System

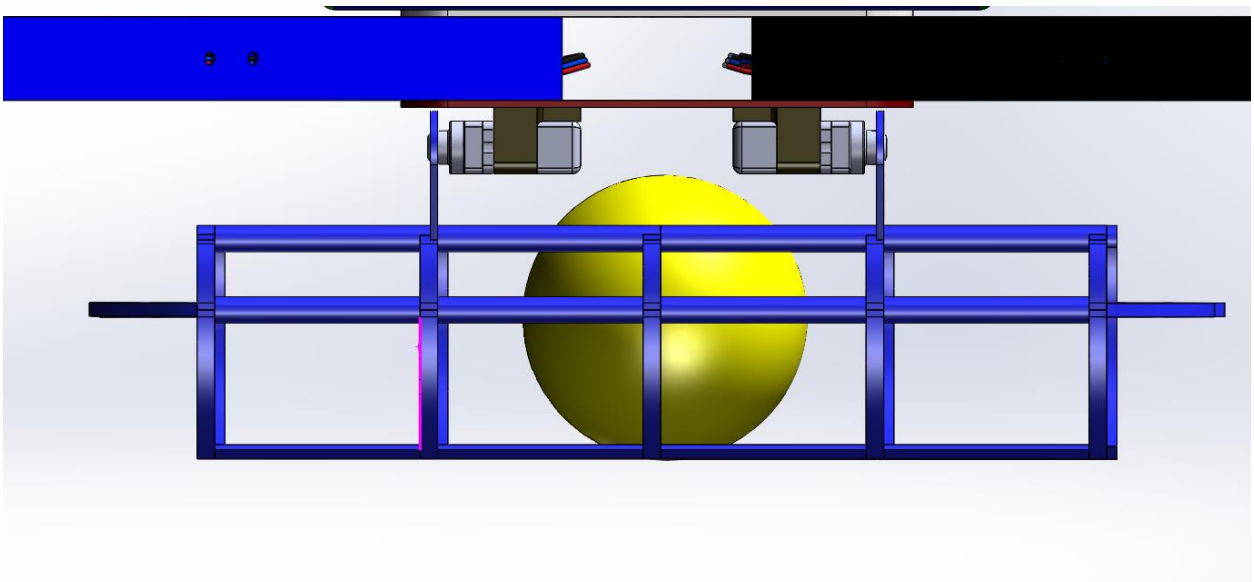

Figure 55: Side view of Retrieval System

There will be no detailed drawings for the servo motor as its geometry is not subject to change and has already been accounted for in the detailed drawings of the servo's bracket assemblies.

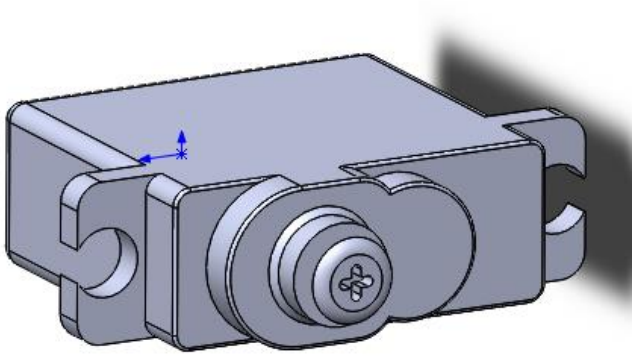

Figure 56: CAD Model of Servo

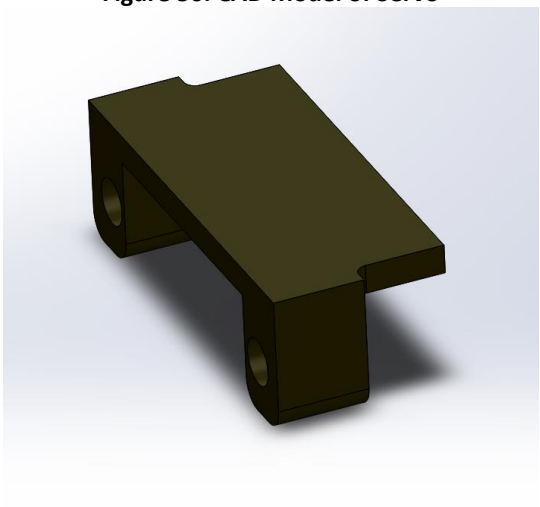

Figure 57: CAD Model of Servo Bracket

Appendix C.2: Detailed Drawings

- The scale of all of the following drawings is 1:1
- The tolerances for dimension of the corded holes locations, specifically the vertical dimensions: 34mm and 50.25 mm have a tolerance of ±0.25mm. The same is true for the horizontal dimensions: 3mm and 6.83mm. The diameter of the holes also had a tolerance of ±0.25mm. This is the smallest known tolerance for three-dimensional printers. If a smaller one is available, it will be used.
- The rest of the dimensions do not have tolerances as their locations are not pertinent to the assembly of the retrieval device.
- Many of these drawings are redundant; therefore, dimensions that carry over from part to part are not illustrated.

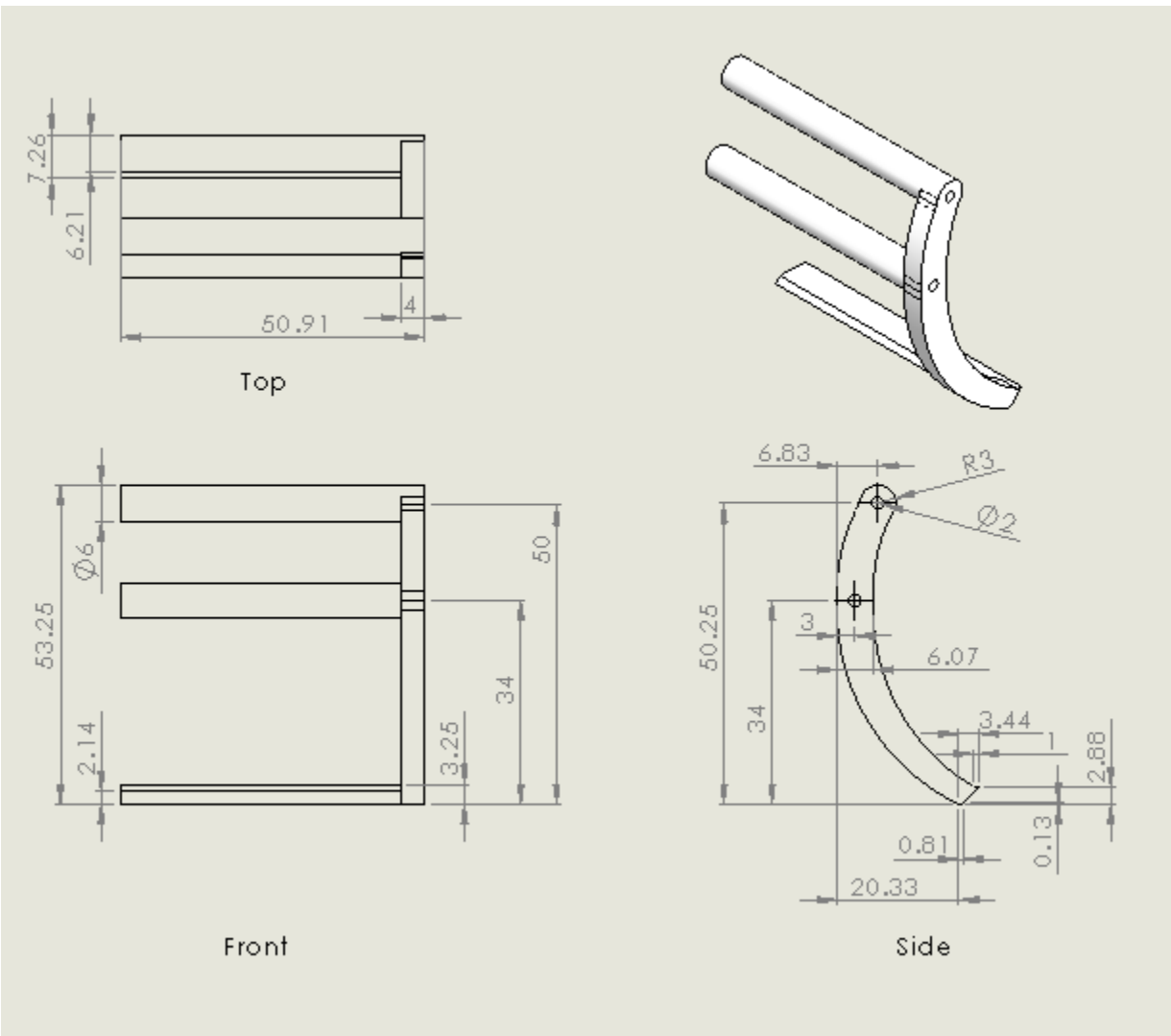

Figure 58: Sidewall Assembly Large

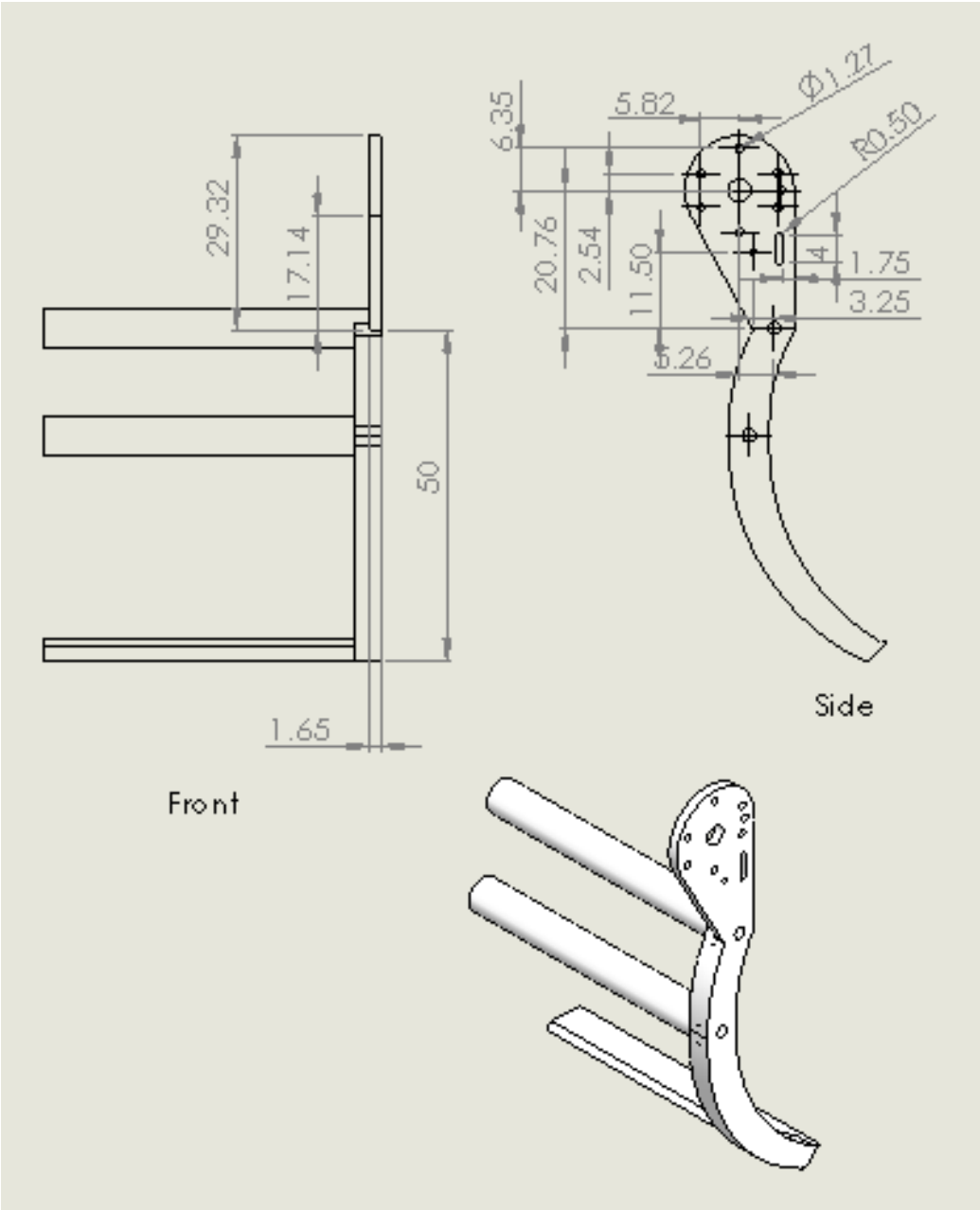

Figure 59: Sidewall Assembly Large Servo Arm

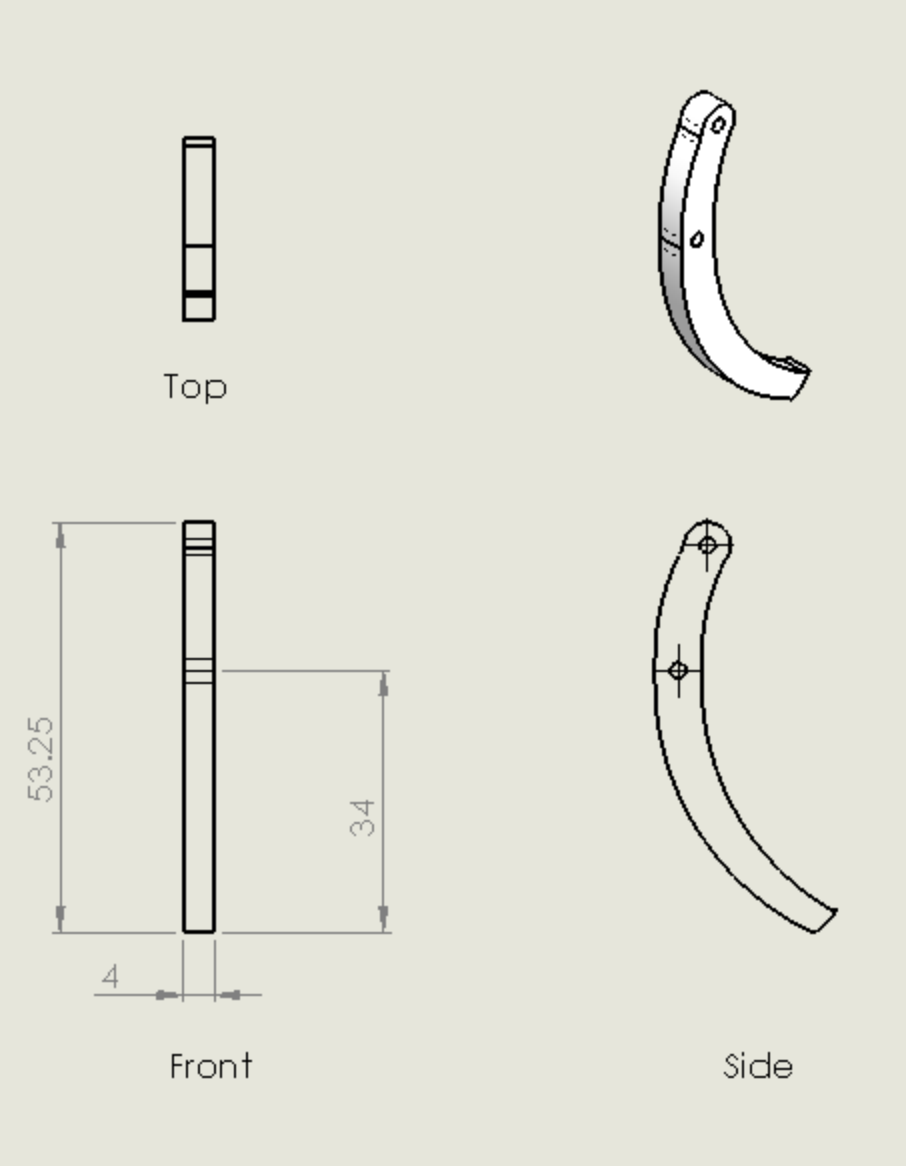

Figure 60: Sidewall Assembly Vertical

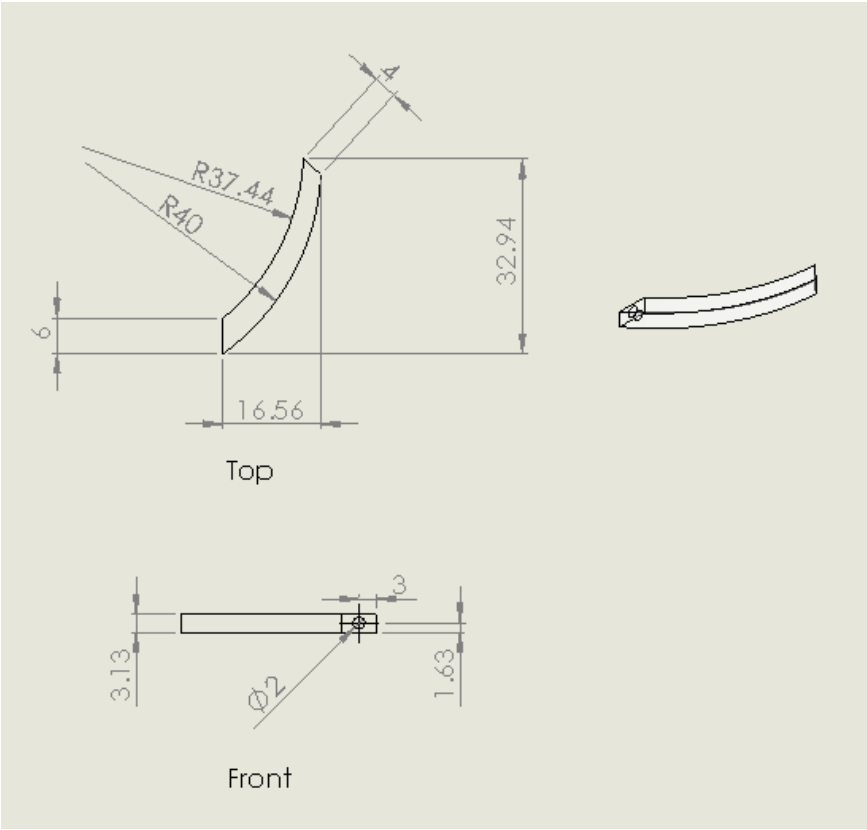

Figure 61: Sidewall Assembly Horizontal

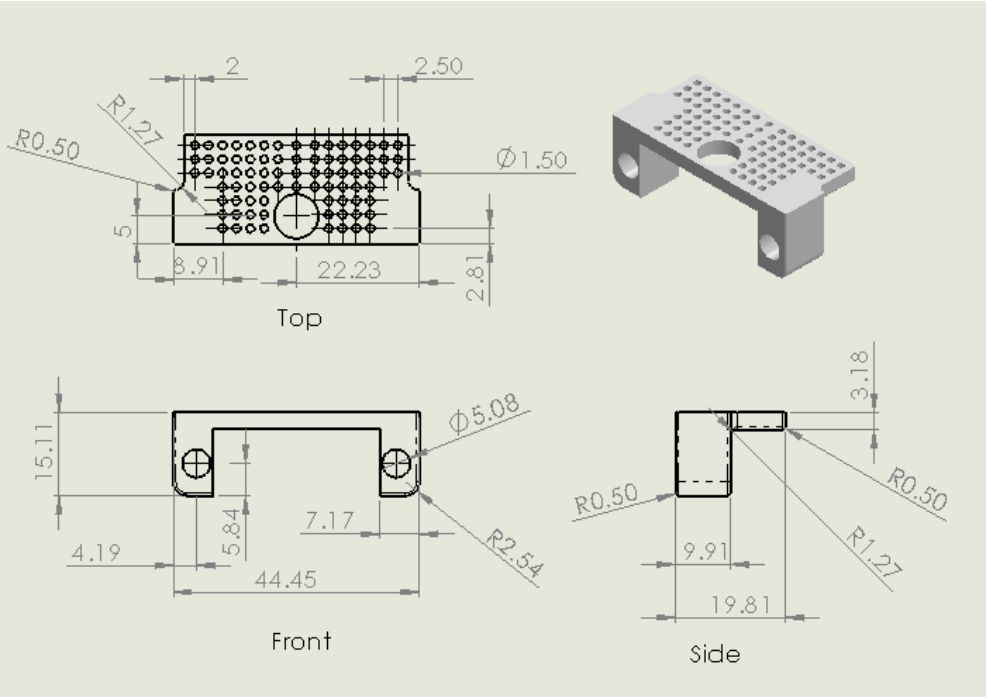

Figure 62: Servo Bracket

While there are holes in the Bracket Support Top, tolerances are not necessary as the holes are only for weight reduction purposes and hold no value in assembly.

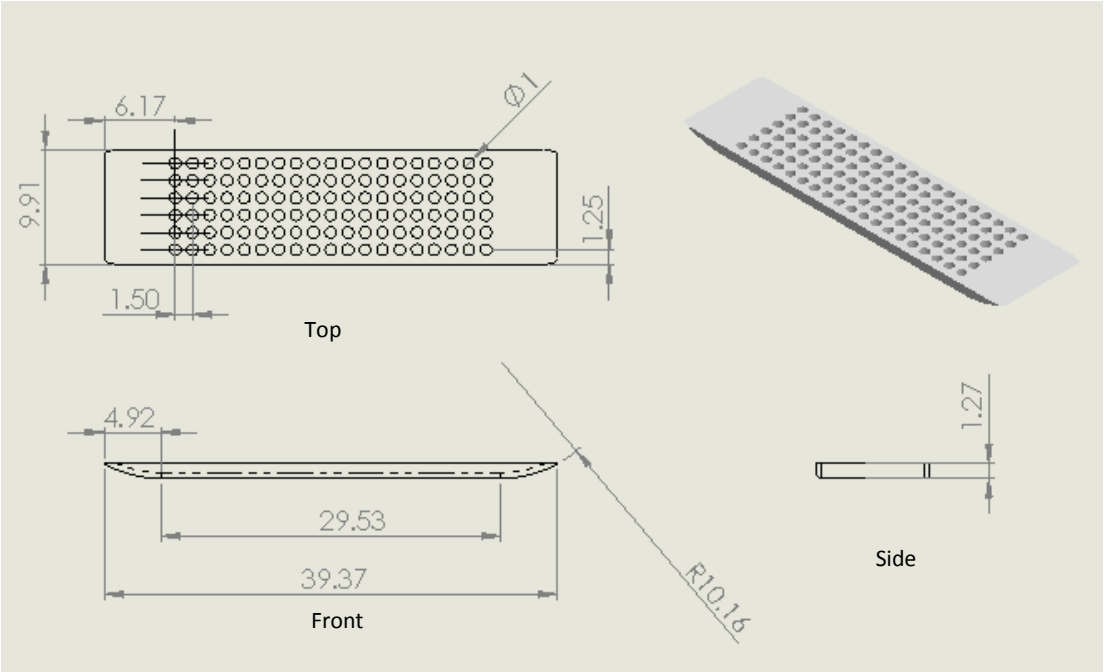

Figure 63: Servo Bracket Support Top

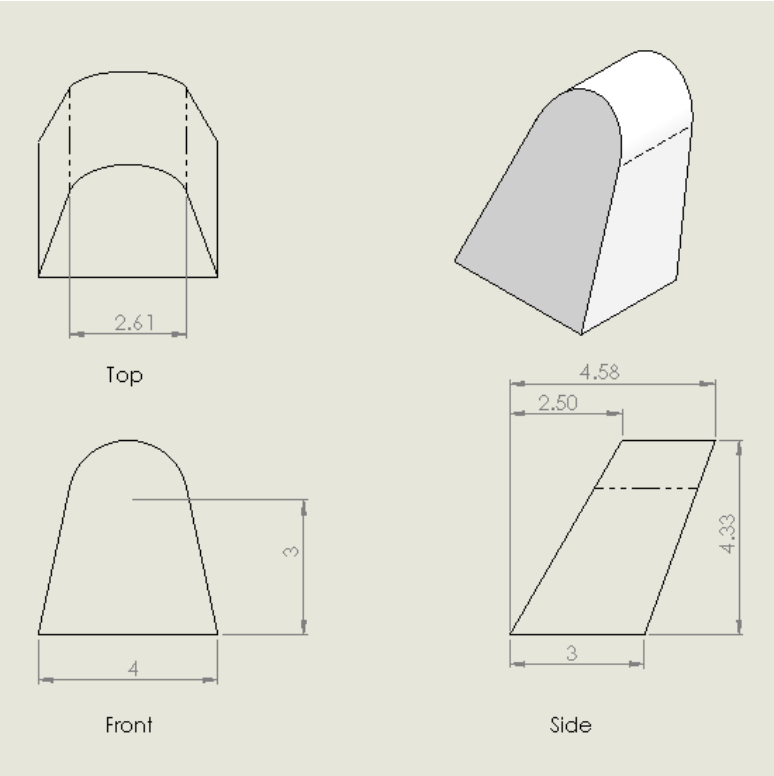

Figure 64: Sidewall Ball Support

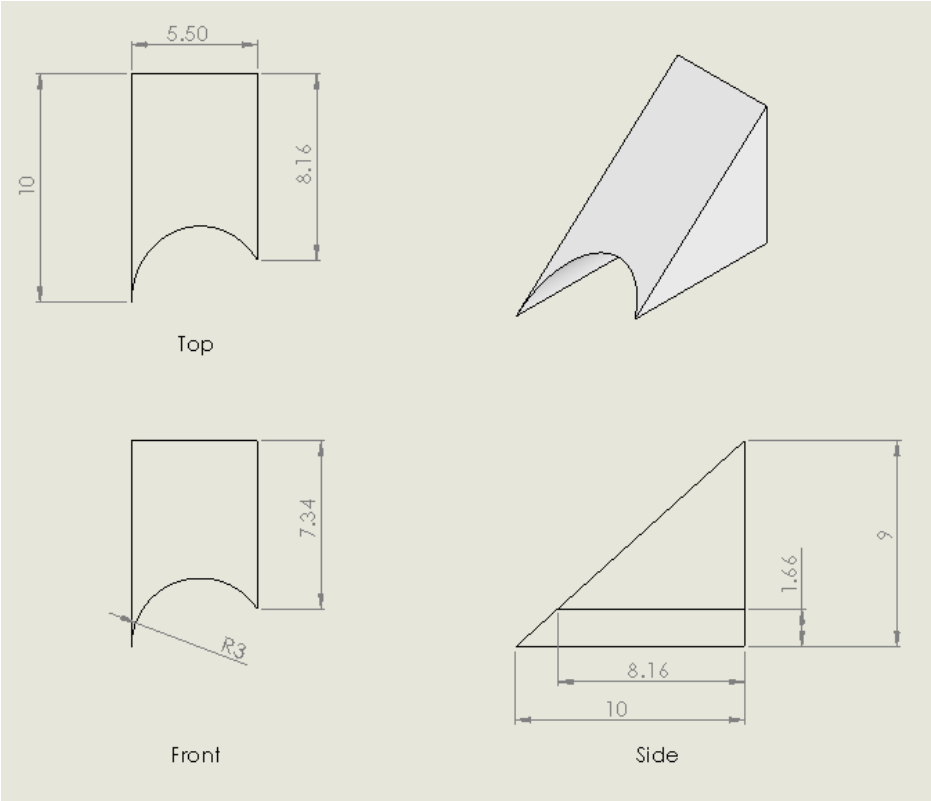

Figure 65: Sidewall Servo Arm Support

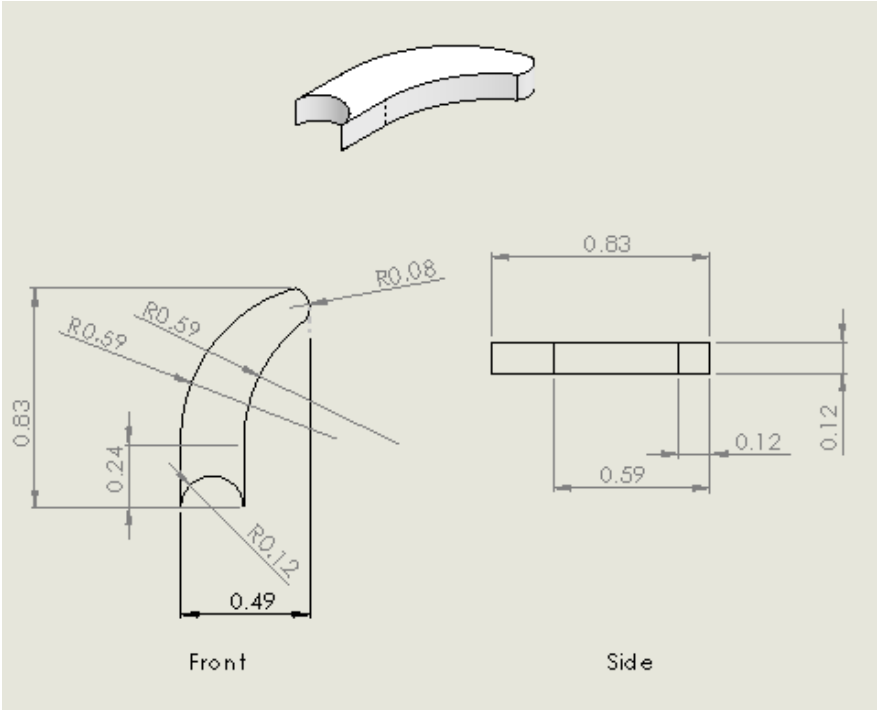

Figure 66: Sidewall Top Support

Appendix D. Budget Allocation

Table 18: Allocation of Total Budget Including Donations

Items	Cost
Materials	$ 479.36
Poster	$ 53.34
Shipping	$ 107.94
Subtotal	$ 640.64
Donated	$ 939.90
Total	**$ 1,580.54**

Appendix E. Bill of Materials

Table 19: Project Purchases

Date Purchased	Brand	Item	Quantity	Price	Cost	Shipping	Total
18-Oct-13	3D Robotics	APC Propeller set	4	$ 8.00	$ 32.00	$ 17.26	$ 49.26
18-Oct-13	3D Robotics	Motor 880 Ky AC	4	$ 24.00	$ 96.00	$ 17.26	$ 113.26
20-Oct-13	HobbyKing	High Discharge LiPO Battery	2	$ 32.29	$ 64.58	$ 17.26	$ 81.84
22-Oct-13	3D Robotics	Motor 880 Ky AC	2	$ 24.00	$ 48.00	$ 17.26	$ 65.26
22-Oct-13	Lowes	Misc. Parts	1	$ 36.27	$ 36.27	$ -	$ 36.27
27-Oct-13	3D Robotics	APC Propeller set	1	$ 8.00	$ 8.00	$ 14.56	$ 22.56
28-Oct-13	Drones	Dean Y cable	3	$ 3.50	$ 10.50	$ 14.35	$ 24.85
6-Nov-13	Motion RC	Micro Servo	4	$ 18.99	$ 75.96	$ 9.99	$ 85.95
7-Nov-13	Bank	ATM/Shipping	1	$ 8.05	$ 8.05	$ -	$ 8.05
7-Dec-13	Penn State	Poster	1	$ 53.34	$ 53.34	$ -	$ 53.34
8-Dec-13	Penn State	Extra materials	1	$ 100.00	$ 100.00	$ -	$ 100.00
	Total Project Expense		24	$ 316.44	$ 532.70	$ 107.94	**$ 640.64**

*note the extra material "purchase" is a buffer zone for the team.

Table 20: Customer Donated Materials

Date Purchased	Brand	Item	Quantity	Price	Cost	Shipping	Total
18-Oct-13	3D Robotics	APC Propeller set	4	$ 8.00	$ 32.00	$ 17.26	$ 49.26
18-Oct-13	3D Robotics	Motor 880 Ky AC	4	$ 24.00	$ 96.00	$ 17.26	$ 113.26
20-Oct-13	HobbyKing	High Discharge LiPO Battery	2	$ 32.29	$ 64.58	$ 17.26	$ 81.84
22-Oct-13	3D Robotics	Motor 880 Ky AC	2	$ 24.00	$ 48.00	$ 17.26	$ 65.26
22-Oct-13	Lowes	Misc. Parts	1	$ 36.27	$ 36.27	$ -	$ 36.27
27-Oct-13	3D Robotics	APC Propeller set	1	$ 8.00	$ 8.00	$ 14.56	$ 22.56
28-Oct-13	Drones	Dean Y cable	3	$ 3.50	$ 10.50	$ 14.35	$ 24.85
6-Nov-13	Motion RC	Micro Servo	4	$ 18.99	$ 75.96	$ 9.99	$ 85.95
7-Nov-13	Bank	ATM/Shipping	1	$ 8.05	$ 8.05	$ -	$ 8.05
7-Dec-13	Penn State	Poster	1	$ 53.34	$ 53.34	$ -	$ 53.34
8-Dec-13	Penn State	Extra materials	1	$ 100.00	$ 100.00	$ -	$ 100.00
20-Nov-13	3D Robotics	Servo Y splitters	3	$ 1.75	$ 5.25	$ 2.07	$ 7.32
21-Nov-13	Robot Shop	Servo Batteries	2	$ 8.65	$ 17.30	$ 9.41	$ 26.71
22-Nov-13	Motion RC	Extra servo	3	$ 18.99	$ 56.97	$ 29.65	$ 86.62
23-Nov-13	Lowes	Shane Lowes	1	$ 19.19	$ 19.19	$ -	$ 19.19
3-Dec-13	Hobby Town	Hobby Town Servos	1	$ 57.21	$ 57.21	$ -	$ 57.21
6-Dec-13	3D robotics	Power D Board	1	$ 15.00	$ 15.00	$ 32.23	$ 47.23
9-Dec-13	CVS	DVD-R	1	$ 6.35	$ 6.35	$ -	$ 6.35
	Total Project Expense		**36**	**$ 443.58**	**$ 709.97**	**$ 181.30**	**$ 891.27**

Appendix F: Electronic Systems Flow Chart

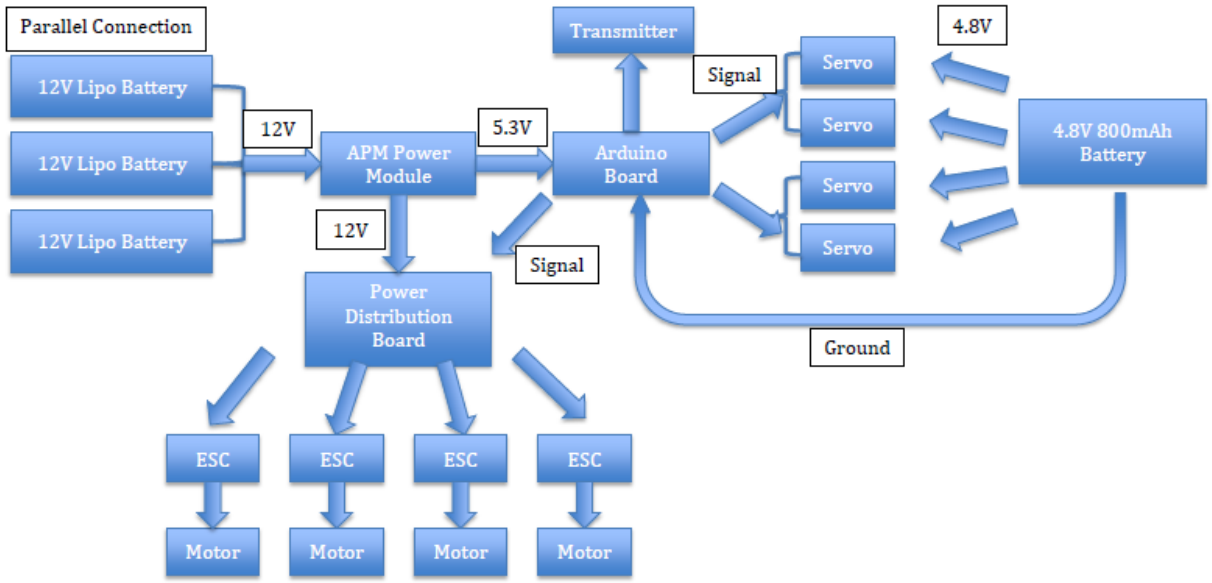

Figure 67: Flow Chart of Electrical System

Appendix G:

Figure 68: Competition Display

Figure 69: Competition Corral (15 ft Diameter) Pink Balls are Heaviest (300 Grams)

Appendix H: Résumés

Alysa Darrenkamp
955 Garlington Circle, West Chester, PA 19380
Email: darrenkampa@gmail.com
Cell Phone: 610.202.0328

Education

The Pennsylvania State University
Bachelor of Science in Energy Engineering December 2013
Minor in Environmental Engineering
GPA: 3.36

Relevant Courses

Electrochemical Engineering	Petroleum Process
Bioenergy and Biofuels	Wind, Hydro and Solar Energy Conversion
Chemistry of Fuels	Combustion

Experience

Manufacturing Body Construction Engineer, Ford Motor Company June 2013-Aug 2013
Dearborn, MI
- Deployed software system into Ford Plants to monitor machinery for required maintenance.
- Developed software instruction to assist in quicker installations.
- Prevented plant production down time and decreased mean time to repair.

Engineering Leadership Development, Siemens Industry May 2012- Aug 2012
New Kensington, PA
- Reduced manufacturing assembly time through creation of a standard wire harnesses ($180K annual savings).
- Reviewed redline drawings for accuracy and consistency.
- Participated in the migration of parts/components into new manufacturing resource planning system.

Intern, U.S. Department of Energy May 2011- Aug 2011
Western Area Power Administration (WAPA) Folsom, CA
- Developed an energy audit to analyze the purchasing and selling of energy with customers; Presented audit to the California Independent System Operators (CAISO).

Project Designer, Society of Women Engineers (SWE) Jan 2011- Oct 2011
Reading and University Park, PA
- Competed in top ten U.S. finals of a technical team competition, WE11; Project topic: Design a Hydrogen Fuel Station for Air Products and Chemicals Inc.
- Administered Outreach Sessions for Penn State Educational Partnership Program.

Leadership

Kenya: Solar Dehydration Engineering May 2013(21 days)
- Designed and built a solar food dehydrator for commercial use.
- Researching and developing a commercial dehydrator business plan.

Costa Rica: Engineering Sustainability Research March 2013(9 days)
- Developed and assisted in hydroelectric, biogas, solar electricity, and greenhouse construction.
- Researched effects of commercial farming on local river system.

Financial Leader Aug 2010- Dec 2010
Penn State Berks Equestrian Team, Reading, PA
- Administrated budget requests and handled withdrawals and deposits.
- Organized fundraising projects.

Planning Leader Sept 2009- June 2010
B. Reed Henderson High School, West Chester, PA
- Developed an energy reduction plan and reduced energy consumption by 20% - 30%.
- Recognized with a $10,000 grant to school district.

Activities

Clubs and Volunteering
- Society of Women Engineers and Society of Energy Engineers. Sept 2009-Present
- Women in Science and Engineering and PSU Equestrian Team. Sept 2009- May 2011
- Chester County SPCA and Chester County Hospital. Sept 2008- May 2009

Jinwen Zhu

jxz5094@psu.edu
320 East Beaver Ave, Apt 519
State College, PA 16801
(602)-363-1328

OBJECTIVE: To obtain an electrical engineering full-time position, beginning summer 2014

EDUCATION: Bachelor of Science in Electrical Engineering GPA: 3.16/4.00
The Pennsylvania State University, University Park, PA
Anticipated Graduation: May 2014

WORKING EXPERIENCE: **AutoCAD Drafter Shanghai, China June – July 2012**
East China Electric Power Design Institute Of China Power Engineering Consulting Group

- Assisted in designing an electrical substation using AutoCAD
- Created sketches, layouts and drawings for a substation
- Reviewed the draft drawings for completeness and accuracy

INTERNATIONAL: **Excursion Group Leader Summer 2011**
The Pennsylvania State University, University Park, PA
"Engineering in China" Study Abroad

- Introduced group members about history, culture and development in China
- Explained the background and technology of the Great Wall and the Three Gorges Dam
- Visited Dow (Shanghai), Ford (China) and Air Products (Shanghai)

SOFTWARE: LabVIEW AutoCAD MATLAB
Solidworks C++ Microsoft Office

LANGUAGE: Chinese Fluency

PROJECT WORK: **Fueling H_2 City In- Class Project Spring 2011**
Sponsored by Air Products

- Evaluated alternative concepts for energy including safety and environmental considerations
- Processed flow diagram for the hydrogen manufacture, compression, storage and fueling system
- Built a model of the H_2/HCNG fueling station in 3-D CAD model
- Design and described station components
- Analyzed for individual station capacity and city-wide station network plan
- Estimated total cost for the fueling station system

CERTIFICATION: Certified LabVIEW Associate Developer

Shane A. Szemanek

Current Address	*Home Address*	*Contact Information*
718 W. College Ave. Apt 7	5 Granite Circle	sszemanek@gmail.com
State College, PA 16801	Doylestown, PA 18901	215-964-7410

EDUCATION: **The Pennsylvania State University** (University Park; State College, PA)
B.S. Mechanical Engineering Expected Graduation: May 2014
Minors: Engineering Design and Engineering Mechanics
Overall GPA: 3.23/4.00

Relevant Courses

Modeling of Dynamic Systems	Compressible Fluid Flow I & II (Graduate Level)
Mechanical Design & Methodology	Senior Design Project: Boeing VTOL Quadcopter
Engineering Design	Junior Design Project: Submersible Water Pump

Continuing Education
46th Annual Comprehensive Short Course in Rotary Wing Technology at Pennsylvania State University
Topics: Aerodynamics, Dynamics, Stability and Control, Propulsion and Drivelines, Structures, and Acoustics

EXPERIENCE: **Norfolk Southern Corporation** Enola, PA (May – August, 2013)
Mechanical Engineering Intern

- Designed Interchangeable End of Train Device Rack System using SolidWorks, Inventor, and FEA
- Designed Inventory Replacement System to enhance the coordination of maintenance requirements
- Designed Automatic Equipment Identification Tag and Scanning System
- Redesigned Worker Created Tools for Mass Production on the Railroad
- Performed Daily Safety and Railroad Car Inspections
- Innovation Committee Member

ArcelorMittal Steelton, PA (May – August, 2012)
Mechanical Engineering Intern

- Designed Specimen Cooling Unit through Thermal and Fluid Analysis and using SolidWorks
- Managed Removal and Installation of the Bearing for the Caster's fifty-ton Turret
- Designed Blast Door for Horizontal Duct of Furnace using SolidWorks
- Inspection, Repair, and Refurbishment of Scrap Prep Crane

PennEngineering and Manufacturing Danboro, PA (January – June, 2009)
Engineering Intern

- Product and Patent Research: Found patents, fastener applications, beneficial companies
- Formulated Excel Spreadsheets for Engineers: Displayed test results, strengths, etc
- Teardown Lab Projects: Pressure tester and video game consoles
- Product Testing: Pressure tester, video game consoles, fasteners

CERTIFICATIONS AND SKILLS:
Certified SolidWorks Professional — C-KEGNPJJCP2
Machine Shop Certified — Pennsylvania State University
MIG and Stick Welding, Burning, Carpentry, and Metal Working

COMPUTER SKILLS:

CATIA	SolidWorks	AutoDesk Inventor	ANSYS
MATLAB/Simulink	Modelica/Dymola	Microsoft Excel	Microsoft Office

LEADERSHIP EXPERIENCE:
Project Management
Norfolk Southern: End of Train Device Rack System, Innovation Committee Member, and Automatic Equipment Identification Tag and Scanning System
ArcelorMittal: Turret Bearing Installation, Crane Refurb., Blast Door
Senior Design Project Team Leader
Designed and Integrated a Pick-Up/Drop-Off System for a VTOL Quadcopter
Junior Design Project Team Leader
Designed Submersible Water Pump for Third World Countries
Assistant Manager of Union Labor: Norfolk Southern Corporation and ArcelorMittal

ACTIVITIES:
HEAL: Penn State Dance Marathon Private Interest Group that Raises Money to Fight Pediatric Cancer
Penn State Formula SAE Club (Formula One Racing): Build and Race our own SAE car
ASME (American Society of Mechanical Engineers): Participate in Design Competitions
ANS (American Nuclear Society): Environmental Connection and Community Outreach
Central Bucks High School East Varsity Football and Wrestling (3 years)

HONORS:
Deans List: Fall 2012 (4.0 GPA) and Spring 2013 (3.72 GPA)
The National Society of Collegiate Scholars: Inducted as a freshman with a GPA>3.4
PennEngineering Scholarship: Granted upon successful completion of internship

Michael Severino

Education

The Pennsylvania State University, University Park

Expected Graduation: December, 2013

B.S., Computer Science

B.S., Psychology

Minor: Mathematics

Current GPA: 3.41

Employment

ITS Lab Consultant, *The Pennsylvania State University* (2009 – 2013)

Provided technical assistance to students, staff, and faculty; onsite (in computing labs), via phone, or via chat. Provided support for any software (including MS Office) on any lab machine. Often worked together with other consultants to solve problems.

Relevant Skills/Projects

Computer Programming

Languages (ordered by familiarity): C, Python, x86 assembly, Java, C++, MatLab, PHP

Proficient with Windows programming

Owner/Developer, *www.GrooveStats.com* (2010 – present)

Work with a small team to develop and support the site, which is written in HTML/PHP/JavaScript/CSS. It has a large database of scores and over 17,000 members.