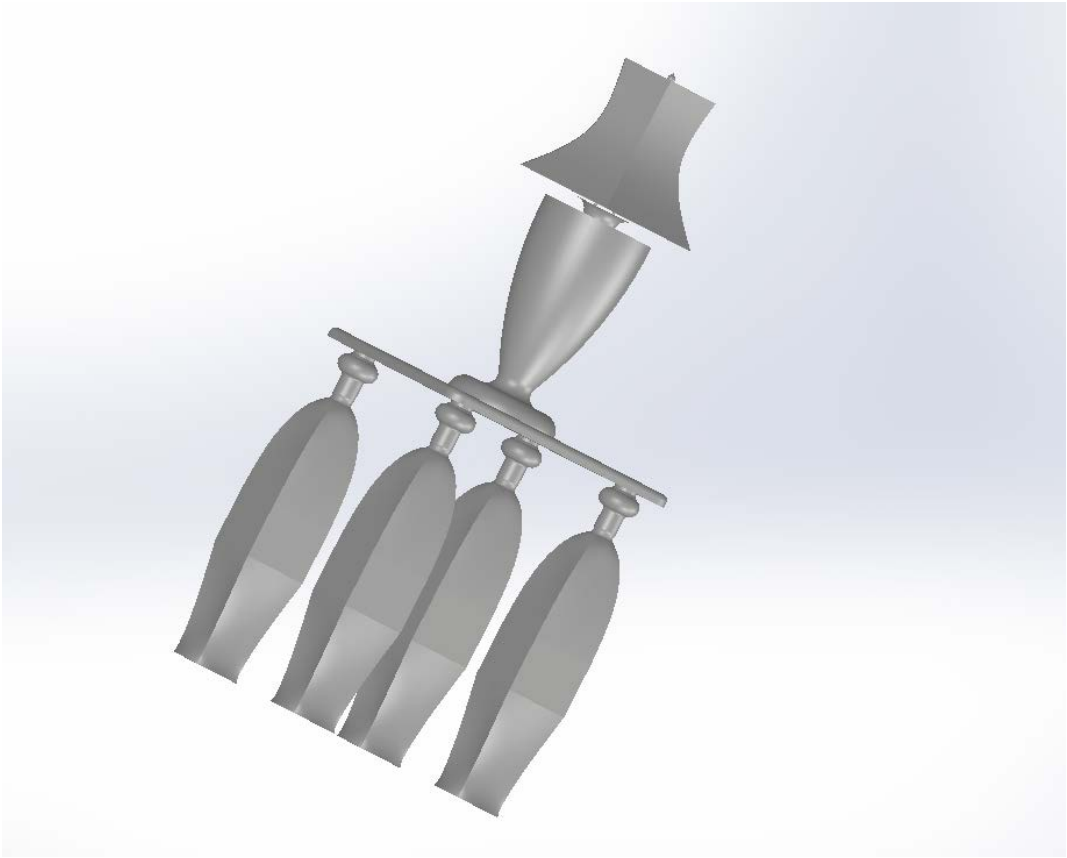

Figure 1. My first assembly, from EDSGN 100, I learned how to create parts that is in this picture such as table legs, lamp shade, lamp base, etc. Then, I assembled them and exercised multiple mates to create the desired relation between parts. This helps me to know what relation I will need in creating Adidas Suave.

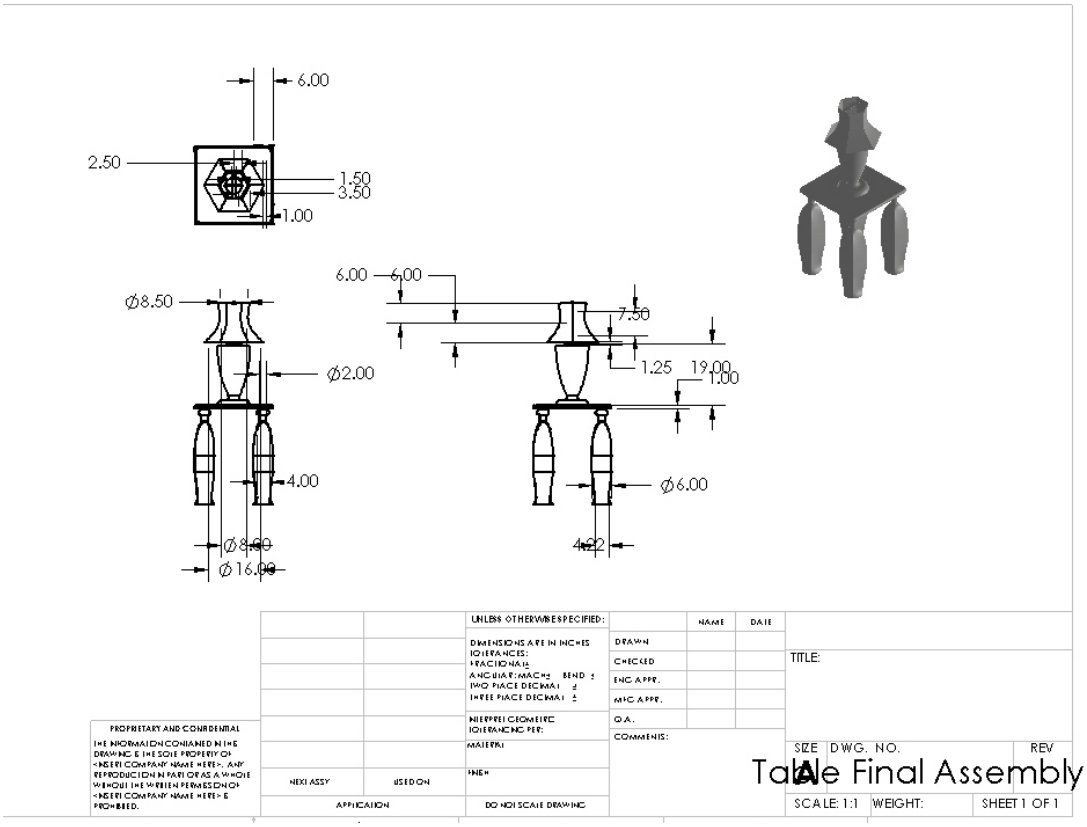

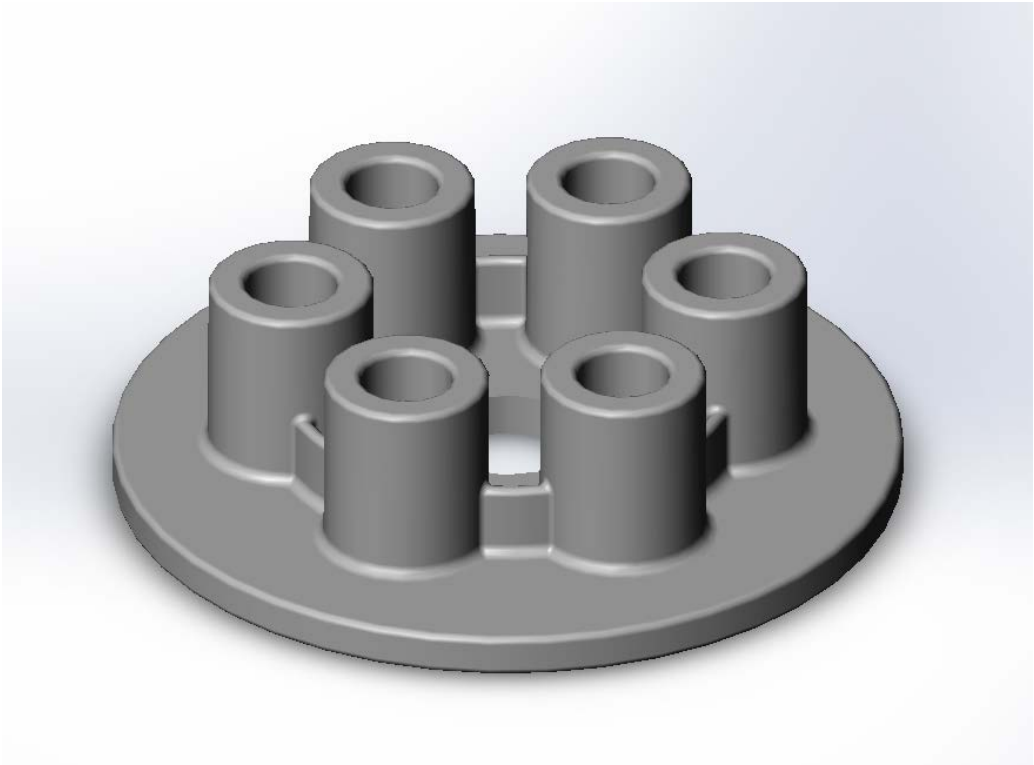

Figure 2. One of the tutorial in Solidworks, teaches me how to pattern in Solidworks. Helped me in making the holes for my shoe lace in Adidas Suave, the hardest part was making the drawing where I learned to zoom in a particular aspect of the part that needs detailed explanation.

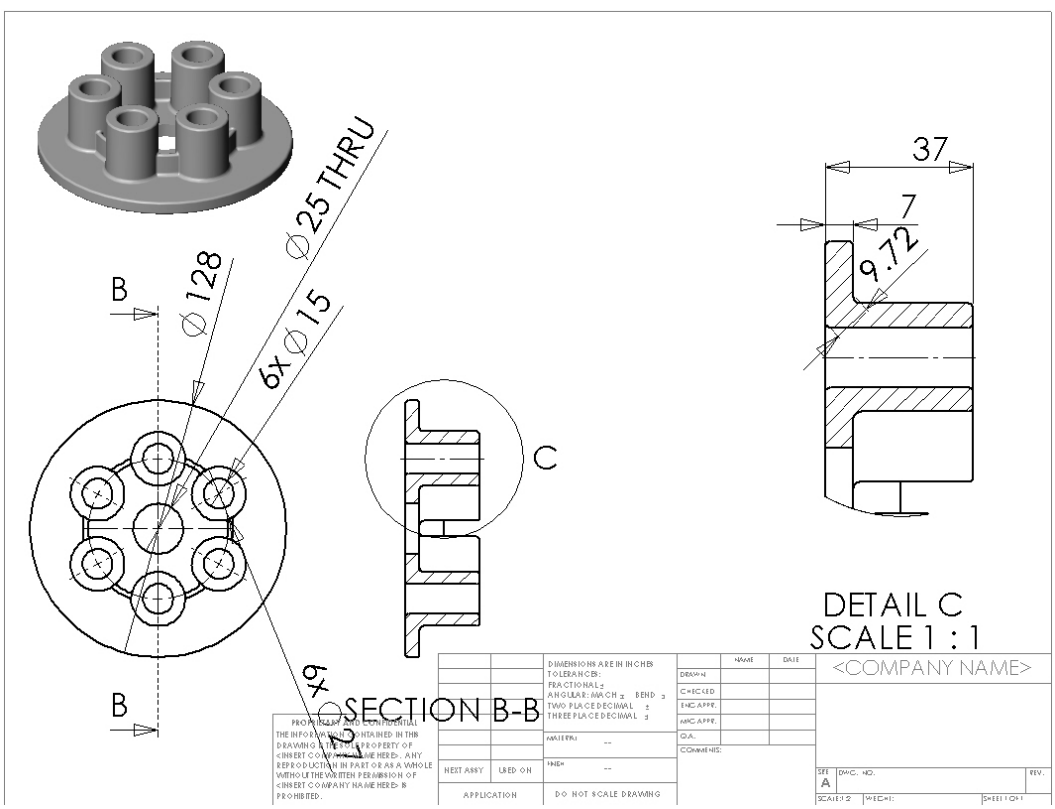

Figure 3. One of the quiz in my EDSGN 100 class, it is fun to interpret the drawings and convert it to a Solidworks model. Simple converting task like this enhance my skill in Solidworks critically. In making Adidas Suave, I then understand that the ability to convert real-life model to Solidworks is a challenging but fun task.

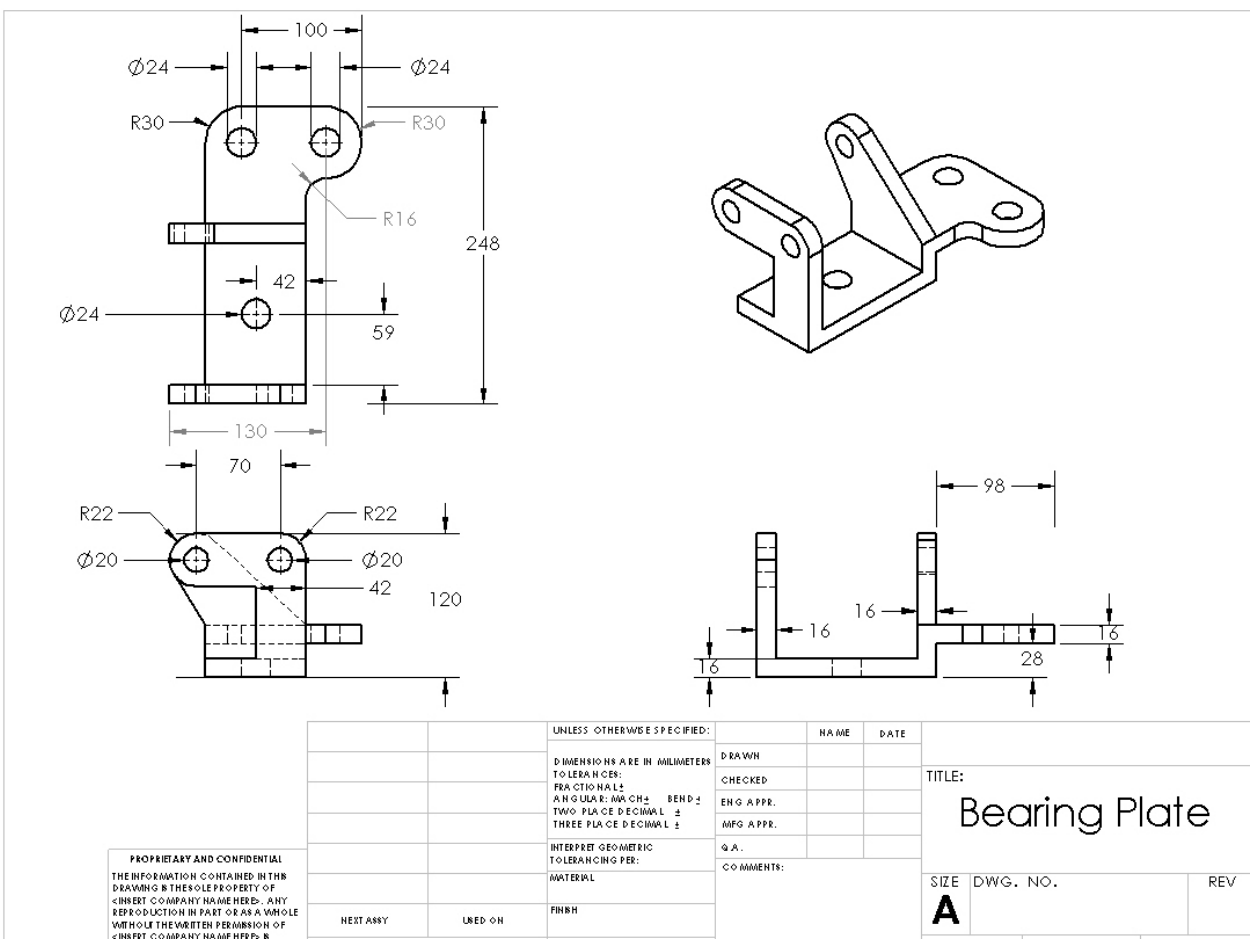

Figure 4. One of Solidworks tutorial where we are taught to sketch in 3D. 3D sketching will help you in drawing parts that are spanned across XYZ dimension, I did this for the shoe lace. Sketching the shoe lace that spanned across XYZ dimension without 3D sketching would be unimaginable for me.

Figure 5. The Solidworks tutorial about making a candle stick. I learned how to loft and sweep in this tutorial. This knowledge was then applied in making the shoe, I swept my 3D sketch with a circle, making a complete shoe lace. While I lofted multiple planes of sketches to create the complete body of the shoe.

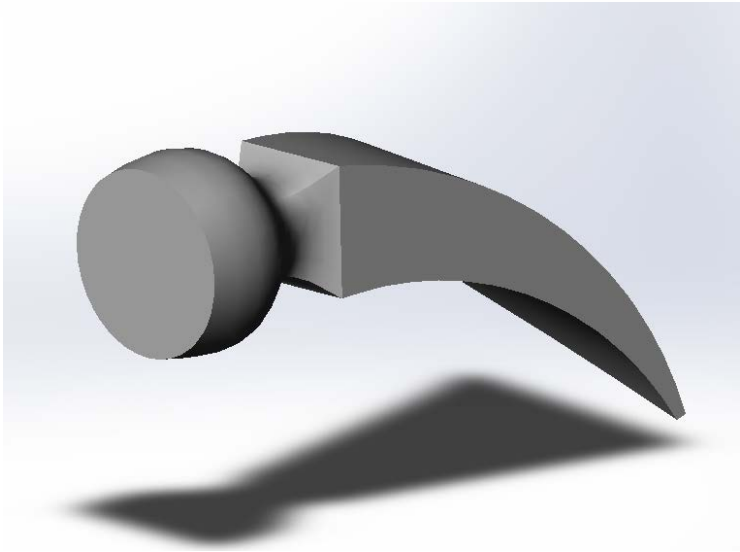

Figure 6. The most challenging Solidworks tutorial I have done, it tried to teach me how to flex object. It took me a while to understand the concept of flex in terms of Solidworks, but finally done.