Zero Energy Home

EDSGN 100
Section: 14
Team 9
October 17, 2014

Joshua Campbell (JG5211@psu.edu)
Nicholas Elliott (NCE5040@psu.edu)
Rushabh Mashru (RWM5574@psu.edu)
Matthew Semanick (MOS5860@psu.edu)

Table Of Contents

Abstract 3

Introduction 3

Mission Statement 4

Customer Needs Analysis 4

Current Zero Energy Homes 5

Renewable Energy Resources 6

City Selection 7

Weather 8

Concept Generation 9

External Research 10

Concept Selection and Cost Analysis 11

Preliminary Sketches 12

Floor Plan 13

Final Design 14

Model 15

Conclusion 16

References 17

Abstract

The earth's environment is changing due to advancements in technology and other fields, weather patterns are unusual, and sea levels are rising. These are results of misallocation of earth's resources specifically the emission of greenhouse gases and associated pollutants. The world depends on resources that are slowly diminishing- 17% of these emission come from homes, making sustainable housing a key component to solving the energy crisis. To solve this we assessed what the customers need, and what is environmental friendly and used modern-day technologies to create a zero energy home that can provide a sustainable way of life.

Introduction

As environmental concerns and threats of global warming have increased, so has the demand for Zero Energy Homes particularly in the U.S. We are designing a Zero Energy Home for the Smith family that will accommodate their family of three. The main of goal in designing this house is to ensure that the home produces at least as much energy as it consumes over a given year while spending no more than $140,000 in its construction. Each room's layout will be carefully dimensioned to make this 800 square foot home feel as large and as comfortable as possible for the Smith family.

Mission Statement

Our mission is to design a home suitable for a family of four to live comfortably while using natural sources of energy to allow the home to be self-sustainable and eco-friendly.

Customer Needs Analysis

Customer Needs	Needs Statement
I want a spacious house	The house has an open floor plan.
I want the primary energy source to be abundant	The house uses multiple solar panels and solar heat conductors on the roof.
I want it to be aesthetically pleasing	The house's exterior is designed to be modern.
I want it to be energy efficient	The house uses the most energy efficient appliances and is also well insulated.
I want the house to be affordable	The total cost of the house is under $140,000.
I want the house to feel comfortable for the family	The house has a place designed for the family to come together to.
I want the house to be adaptable to the changing seasons	The house has one foot overhangs to accommodate the changing seasons' sun angles

Our customers, the Smith Family, need a self sustainable house that supports their family of 3 all for a cost less than $140,000. This house must produce its own energy making it a net-zero energy home, along with being aesthetically pleasing. An open floor plan will give the home a larger feel while allowing for a smaller space thus conserving energy. To make the house special to the clients, a specially designed family space will be incorporated to allow them a quality place to spend time together. The customer needs the final house plans before October 17th upon proposal.

Current Zero Energy Homes

	The Nissen-Butler home	The Strauss Home	Jackie O'Neil Prototype ZEH
Location (City, State)	Cleveland, Ohio	Rocky River, Ohio	Perkiomenville, PA
House Size (floor area in square feet)	2300	3300	2216
Number of floors	2	2	2
URL of web site where info is found	http://www.bergesllc.com/wp-content/uploads/2013/09/Building-High-Performance-Homes-in-Ohio.pdf	http://www.bergesllc.com/wp-content/uploads/2013/09/Building-High-Performance-Homes-in-Ohio.pdf	http://www.citilogs.com/pdfs/consillience_philadelphia_sustainability_awards.pdf
Number of occupants	Single Family	Single Family	Single Family
Number of Bedrooms	3	3	N/A
Type of heating system	Mini-split air source heat pumps and ERV with passive solar design	Mini-split air source heat pump and ERV	Geothermal & radiant floor heat
Main Heating Fuel	Solar Panel Arrays (Garage and Roof)	Gas Heat, Passive Solar	PV system
Size of photovoltaic system	29 kWh	N/A	5.25 kW
Solar water heater (y/n)	yes	yes	Tank-less on-demand water heating
R-value of wall insulation	R-55	3.5" R-21 Continuous and R-15 cavity	N/A
R-value of ceiling insulation	R-69	R-55	N/A
Ventilation air heat recovery	Zehender ERV	Less efficient ERV than Zehender	ERV and humidity control
Predicted or measured annual energy use	100 kWh predicted	N/A	-66 kWh predicted (6 month figure)
Any other pertinent info	Geothermal heat exchanger	Finished basement included. 85$ per sqft	LEED GOLD Certified

Renewable Energy Resources

When designing a zero energy home, there are many options to consider in order to achieve the level of performance desired at an optimal cost. One of these decisions lies the choice between types of renewable energy to use in the house. Solar heat collectors are an option that must be considered to offset the cost of standard heating of the home's water. Since "water heating accounts for about 15 percent of the average household's energy use,"[1] The use of solar heat collectors could achieve annual energy savings of up to $500 per year.

Solar Heat Collectors

http://solartribune.com/wp-content/uploads/2011/06/metaefficient.com-evacuated-tube-water-heater.jpg

Photovoltaic System

http://www.homesolarpvpanels.com/Images/solar-photovoltaic-panel.jpg

Solar PV systems are another commonly used renewable energy process that harnesses the sun's energy into electricity. This process involves the use of polycrystalline cells, the dominant cell in the solar PV market, to pass the sun's rays through two panels in order to knock loose electrons, which pass through an interior circuit. The panels are coated on the silicon surface, one in boron and one in phosphorus to cause a flow of electrons to be created from the sun's energy captured by the circuit (How Solar Energy Works).

[1] How Solar Energy Works

City Selection

We discovered through our surveys that most customers chose cost, weather, and proximity to major city as their standards for choosing the location. With this, we searched for a place in Pennsylvania that is compatible with those standards and we discovered that Philadelphia was the best choice to build our zero energy house.

http://mapssite.blogspot.com/2009/01/usa-map-philadelphia.html

Weather in Philadelphia

The research discovered that Philadelphia has the most days with available sunlight among major Pennsylvania cities with 205 days. Similar to the rest of the northeastern United States, the climate fluctuates seasonally with hot temperatures in the summer and near freezing temperatures through most of the winter. The annual rainfall was also moderate when compared to the rest of the state; the results are as follows.

Average Temperatures

Data from:
http://www.currentresults.com/Weather/Pennsylvania/annual-days-of-sunshine.php

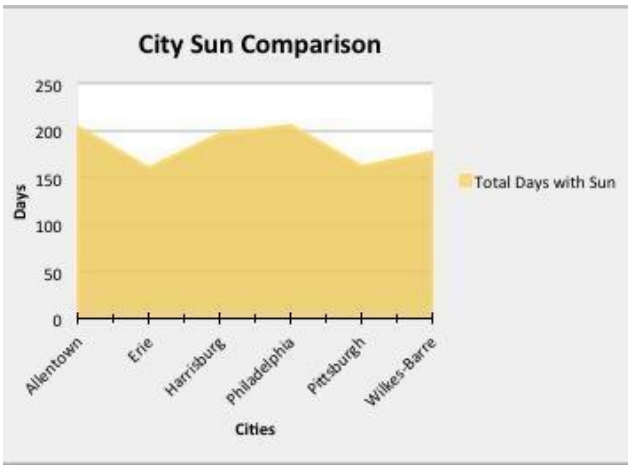

http://www.weather.com/weather/wxclimatology/monthly/graph/USPA1276

Philadelphia, Pennsylvania

Average temperature July: 77 Degrees; Average temperature January: 33 Degrees

Maximum Precipitation: 4.52” in July; Minimum Precipitation: 2.87” in February

Concept Generation

Creating a house that fit the bill for a family of three for under $140,000 that was net zero energy was no easy task to accomplish. We created many different concepts all using different methods to achieve the desired goal within the price limit. Our concepts each had a design of under 1000 square feet using primarily solar power and passive solar heat. Our initial brainstorming had multiple commonalities to the design including thick insulation, energy efficient appliances, and an open layout throughout the house. We also decided that the layout also needed to have places for the family and guests to unify together at.

Multiple surveys were generated in order to analyze the preference of the energy source and how that source would be contributed into design. Overwhelming support was in favor of solar power and of those who chose solar wished that the design utilized the components of solar for all to see. The surveys determined that these panels would be a key feature in the aesthetically pleasing design. All of these factors were taken into account when developing new concepts.

Selection Criteria	Maximize the PV system	High R value for insulation	House size	Solar Heater	Energy Efficient Design
Affordable	+	+	0	+	0
Energy Efficient	+	+	0	+	+
Sustainable	+	+	0	+	+
Use of Green Technology	+	+	0	+	0
Sum of+'s Sum 0's Sum of -'s	4 0 0	4 0 0	0 4 0	4 0 0	2 2 0
Net Score	4	4	4	4	2

External Research

While designing our house we wanted to make sure we don't use any ideas that were patented. While researching for patents these were a few that stuck out:

Hercuwall-A combination of concrete, insulating foam, and rebar make up the structure of hercuwall. It offers economic advantages compared to traditional wall construction and is a patented "green" system because of its insulating properties.

Nuvosun Thin Film Photovoltaic system – This is a thin film that can be laid on the exterior of a house to generate energy from the sun. Nuvosun currently owns two pending patents on this photovoltaic technology.

Geothermic Heat Pump- Consists of heat exchanger unit and at least one ground loop system. Heat is taken from the ground via the ground loop and is exchanged in the heat exchanger in order for it to be used. This system was designed by Emil and Jeffery Taraba and the patent publication date was May 9, 2012.

Concept Selection and Cost Analysis

The models were each critiqued and ranked based on the needs of the Smith family. A redeveloped final design was reached through the use of the ZEH Calculator with the following results, keeping it under the budget of $140,000.

Penn State Center for Sustainability

General Info	
Location	Philadelphia
Electricity cost ($/kwh)	0.1
House type	1 story
Conditioned floor area (sq.ft.)	800
Number of bedrooms	2
Envelope Details	
Wall construction	Double 2x4 with 10" foam
Ceiling Insulation	R40
Window type	Triple low-e
Upper floor ceiling area (sq.ft.)	800
North wall area (gross) (sq.ft.)	400
East wall area (sq.ft.)	200
South wall area (sq.ft.)	400
West wall area (sq.ft.)	400
North window area (sq.ft.)	42
East window area (sq.ft.)	24
South window area (sq.ft.)	118
West window area (sq.ft.)	0
Air tightness	Tight with heat recovery
Appliances	
Refrigerator	Best
Clothes Washer	Best
Dishwasher	Best
Small Appliance Input	
Extras	
Garage	a. None
Hot Tub	a. None
Pool	a. None

Zero Energy Home Calculator

Heating & Cooling	
Type of heating & cooling system	Electric resistance
Solar Technologies	
Size of PV system (kw)	4.80
Solar water heater	Yes
Behavior	
Water conservation	Some
Uses clothesline	Some
Thermostat setback	A lot
Heat thermostat setting (F)	68
Cool thermostat setting (F)	77
Results	

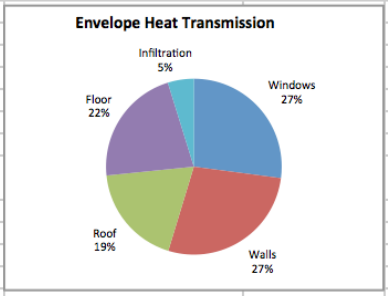

Base House Cost	$	106,351
PV Cost	$	24,000
Upgrade Costs	$	8,619
Total House Cost	$	138,971

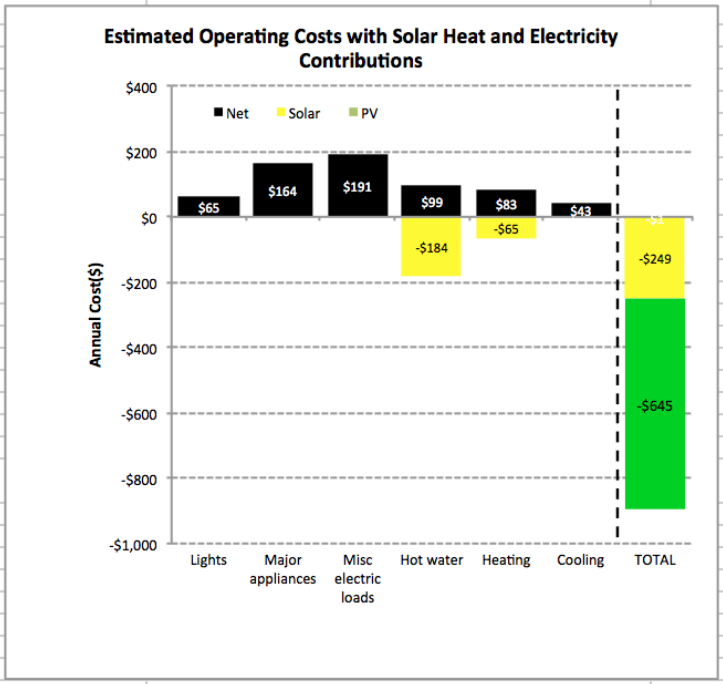

Preliminary Sketches

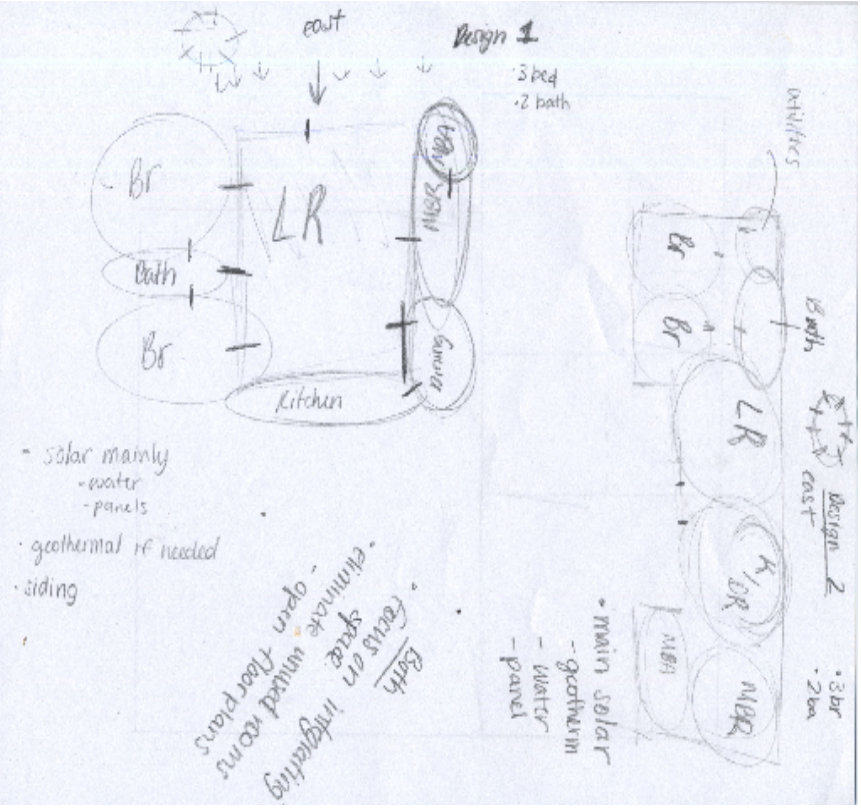

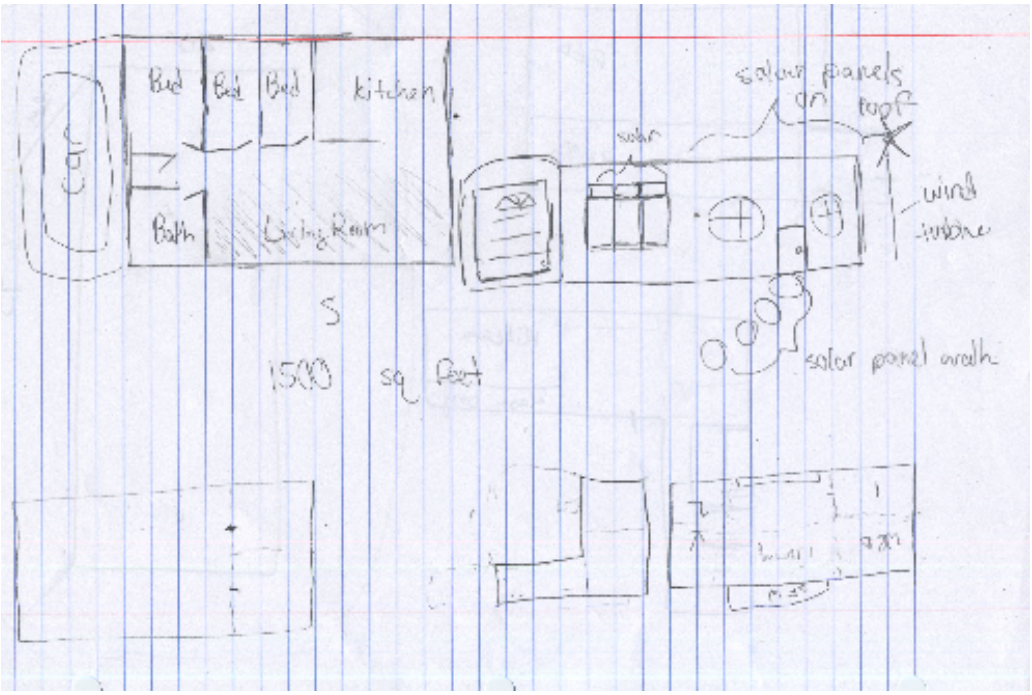

Final Design

A simple approach was generated in the final model since the Smith family wanted an affordable house with intentions of family bonding above all. A total of 800 square feet embody the final model with majority being used as common areas for all to gather in. The house has does not have garage, but a sleek roof top balcony was designed for the family to spend quality time on overlooking the nearby river. Two solar heat conductors and a PV system created the energy, providing for the house. Passive solar heat on the southern side of the house was designed to help heat the house in the winter and keep it cool in the summer. 118 sqft worth of windows on the south side allow sunlight to heat up the solar mass of 250 sqft.

As guests enter the house, the space will be enhanced through the use of natural light in the house and large windows to make the space feel larger. In all of the bedrooms and the bathroom, pocket doors allow entry and eliminate the space lost using traditional doors. The kitchen and living room remain undivided by any walls to allow the family to use the both rooms for many purposes. Incorporating a place to do laundry in an intermediate room inside the bathroom also saved space.

Floor Plan

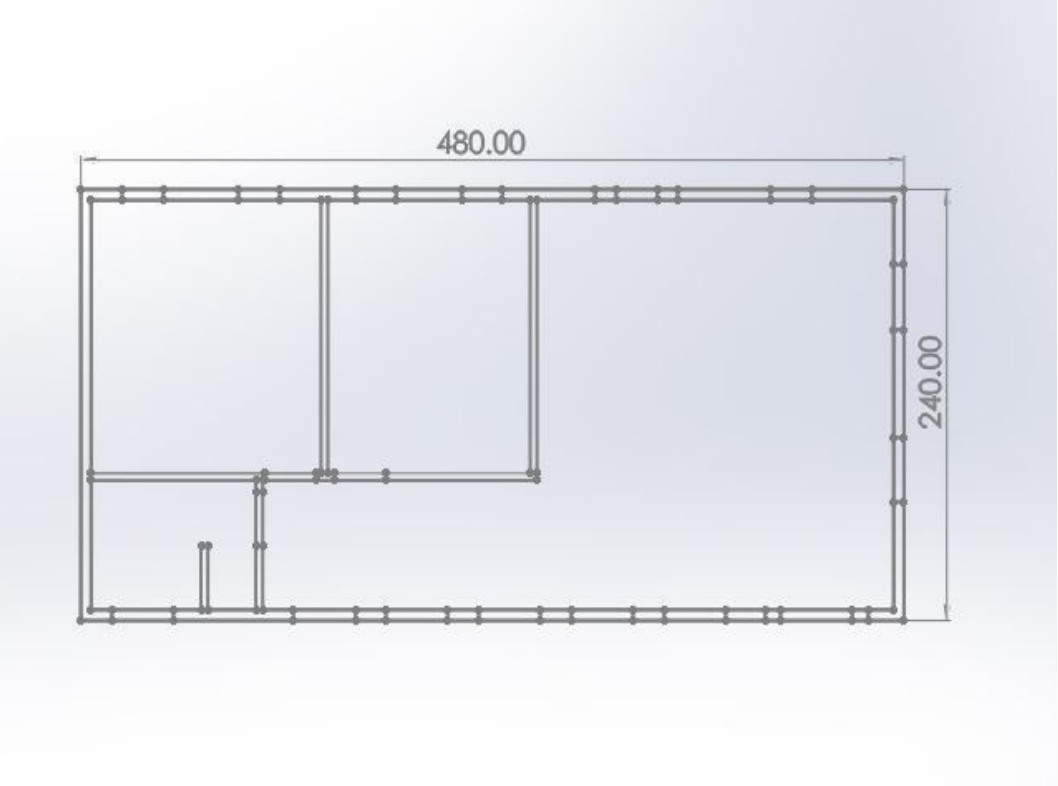

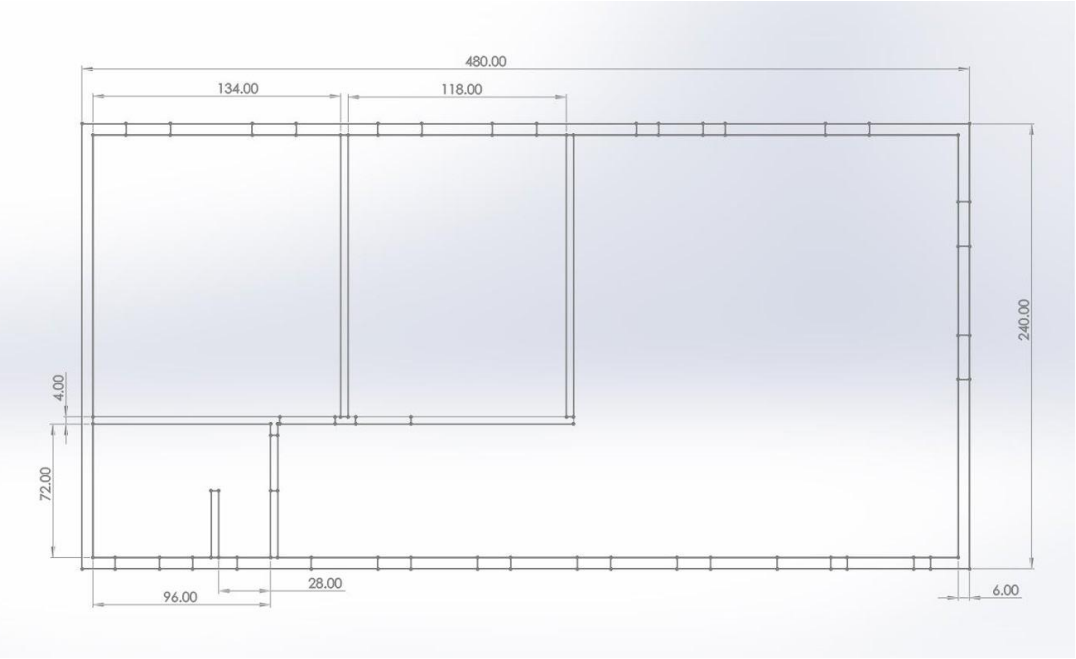

Model

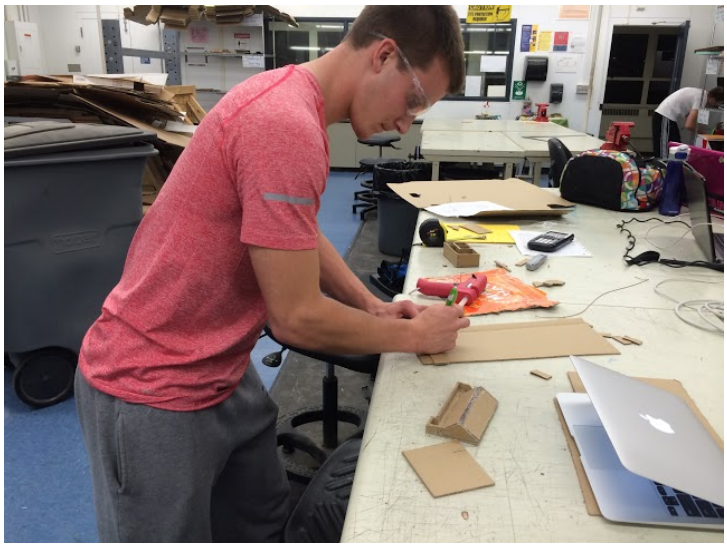

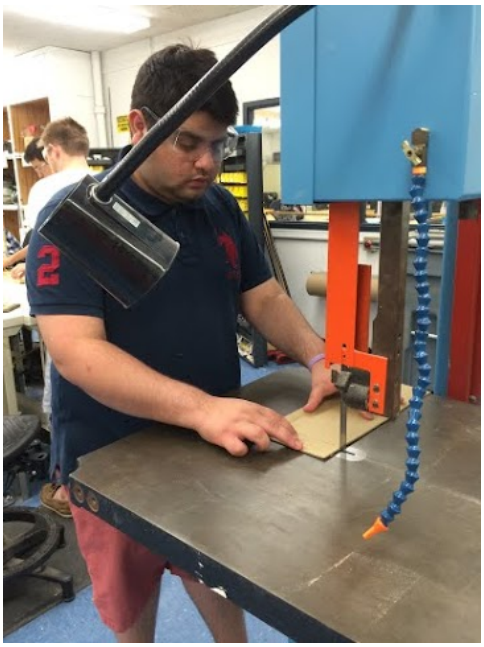

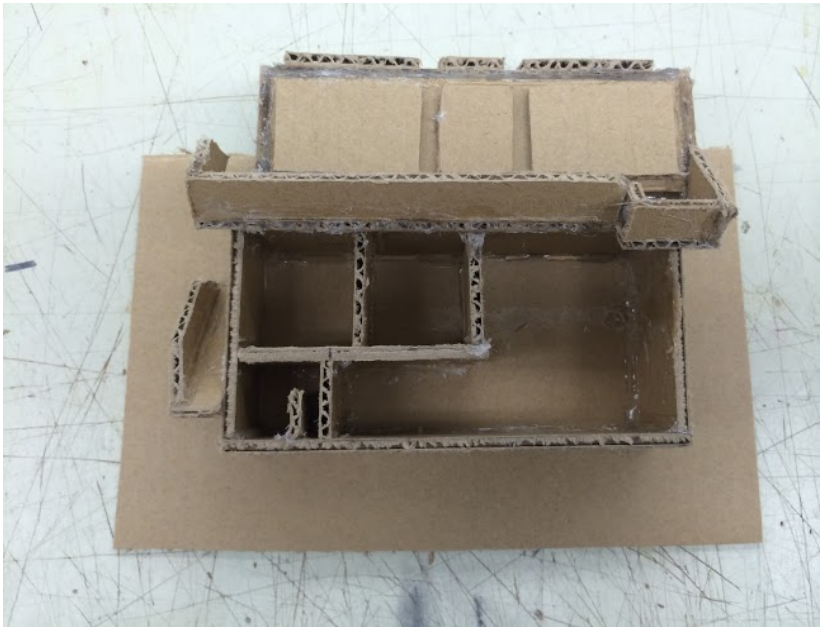

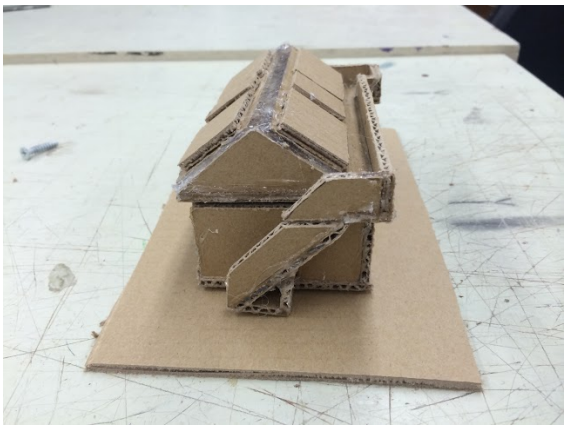

Conclusion

We used surveys to come up with the standards people need for their house. We then prioritized the customers needs and used our calculator to design a house that met those standards. We incorporated concepts such as good airflow, use of natural light and heat that helped us come up with a house that relied less on the grid power and more on natural energy. We allocated resources properly to make sure our house produces equal and more energy than it consumes. Solar power is our primary source of energy, reducing the long-term maintenance costs for the home.

Overall, Team 9 was able to design and build a net-zero energy home that is aesthetically pleasing and comfortable for the Smith's, a family of three, to live in. The location was pleasing for the family since they could take mass transit for majority of their trips around the city to reduce their personal carbon footprint.

References

1."How Solar Energy Works." *Union of Concerned Scientists*. N.p., n.d. Web. 11 Oct. 2014. <http://www.ucsusa.org/clean_energy/our-energy-choices/renewable-energy/how-solar-energy-works.html#.VDm_4_l4pqw>

2.http://solartribune.com/wp-content/uploads/2011/06/metaefficient.com-evacuated-tube-water-heater.jpg

3.http://www.homesolarpvpanels.com/Images/solar-photovoltaic-panel.jpg

4.http://www.hercutech.com/products/hercuwall/

5.https://www.google.com/patents/WO2013109977A1?cl=en&dq=Nuvosun+Thin+Film+Photovoltaic+system&hl=en&sa=X&ei=PlZBVIG1B8rOggTD_YAQ&ved=0CB0Q6AEwAA

6.https://www.google.com/patents/EP2253920A3?cl=en&dq=geothermal+heat+pump+emil&hl=en&sa=X&ei=wFZBVPzBL9SXgwSd_oHQBg&ved=0CB0Q6AEwAA