Aluminum Elevator Final Design Report

EDSGN 100

Section 024

Team 5

Submitted to Professor Sven Bilen

13 December 2013

Robert McNulty rwm5541@psu.edu

Neil Khanna nxk5139@psu.edu

Josh Parmet jop5381@psu.edu

Chris Marookian cjm5927@psu.edu

Josh Zahniser jvz5218@psu.edu

Executive Summary

This report details the design and specifications for a new elevator. The parameters given were that the new design must incorporate aluminum and must benefit the University Park Campus of Pennsylvania State University. The design reduces the weight of the car in order to save energy for the campus.

Table of Contents

A. Introduction and Problem Statement pg 2

B. Concept Generation pg 3

C. Design Selection pg 10

D. Review of Design Features pg 11

E. Analysis pg 13

F. Description of Design Operation pg 14

G. Life Cycle Analysis pg 15

H. Summary pg 15

Appendix A pg 16

A. Introduction and Problem Statement

A.0 Introduction

Our design subject was the incorporation of aluminum into the design of elevators on campus, as well as investigating improvements to the overall design of elevators. Initial research showed that the

lighter weight of aluminum would not be of much benefit to counterweighted elevators, where the weight is not as important. However, many elevators on campus are powered hydraulically, which would gain a significant energy benefit from a weight reduction. Once the overall idea of elevators had been narrowed down to hydraulic passenger elevators, we were able to begin the design process.

A.1 Mission Statement

To create an hydraulic passenger elevator design that improves upon normal design through the use of aluminum.

B Concept Generation

B.0 Customer Needs Assessment

The problem of addressing customer needs in the industry of elevators is to define exactly who the customer is. There are two main areas that can be addressed: The people who use the elevator for transit and those that own the facility and the elevator and/or are responsible for maintaining it. For this project, we will address the needs of the owner, as they will be the stakeholders who make the decision regarding elevator procurement. However, the needs of the user are not to be ignored, as they are also of great importance, but ultimately can be of lesser significance if they conflict with the needs of the owner. To gather these customer needs, we looked at the websites for many elevator manufacturers, such as OTIS. These websites show what manufacturers emphasize in their elevator marketing and sales, as well as showing what buyers thought of the elevators. There is potential bias here, since the companies will mainly want to depict their product in a positive light, however provides a good reference baseline. We also interviewed many people to determine what they, as users, would desire in improvements to existing elevator design. It should be noted that the users often disregard price and

safety in their considerations.

B.1 Weighting the Customer Needs

As previously stated, the needs of the owner need to be of higher consideration. If meeting the needs of the user conflicts with the needs of the owner, the owner must take precedence in this evaluation.

Table 1. Initial Customer Needs List Obtained Through Online Research and Interviews

Cost to operate
Low initial Cost
Durable
Easy to maintain
Swift
Smooth ride
Easy to use
Safe
Aesthetically pleasing

Table 2. Hierarchical Customer Needs List

1. Safety
F.1 Meets ASME A17.2 Standard for passenger elevator safety
2. Cost to operate
F.1 Energy Efficient
3. Easy to maintain
F.1 Can be repaired and maintenance by conventional methods
4. Durable
F.1 Will not wear down permanently easily
5. Smooth Ride
6. Easy to operate
7. Swift
8. Aesthetically pleasing

From our customer needs analysis, we determined that what we should focus on is the perfecting of the energy efficiency of elevator design due to the fact that cost to operate is the highest need that we can address. This can be achieved by a number of methods. In terms of the top customer need, safety, there is little room for innovation because elevator designs are already at maximum reasonable safety level. The concerns of the customer such as smooth ride and speed, are very difficult to address in a structural redesign, in addition to potentially compromising safety.

B.2 Revised Problem Statement

After observing the customer needs within the market that would be purchasing this elevator, we determined that what we need to focus on is how to make the elevator lighter than standard ones now without compromising on safety. Over all of Penn State's 20 campuses 400 million kilowatts of energy is consumed a year. University Park consumes approximately 80% of the total energy. Only 45 million kilowatts is produced by the school by the East and West steam plants. The rest is purchased mainly from West Penn Power for University Park campus. This means that one of our focuses will be trying to reduce energy costs on University Park's campus through the redesigning of elevators.

B.3 External Search

Most information regarding elevators can be readily found online. Most manufacturers list their design specifics. It is also beneficial that for the most part all hydraulic elevators work on the same principle, and if one understands how one works, they will have a reasonable understanding of other elevators.

B.4 Literature Review

When looking at documentation, we found that the websites for elevator manufacturers, such as OTIS, a major elevator manufacturer in the United States, were the most informative. They documented how their elevator designs worked as well as what structure was needed for one and also documented the regulations that needed to be followed.

B.5 Patent Search

Table 3. Art-function Matrix for Elevators

Function	Art		
	Elevator Door Lock	Elevator Door Controller	Solar Powered Elevator design
Keep Doors shut	EP 1886963 B1		
Easily open and close doors		WO 2004028951 A1	
Provide supplementary power to elevator			CN 202116117 U

B.6 Design Target

The new elevator must be evaluated in a number of aspects. The strength of the elevator must be weighed to be comparable to the normal steel design with nonexistent chance of injury. The weight of the car when empty will also be evaluated, a reduction in weight will reduce the energy needed to move the car. Different door designs must be more energy efficient or stronger in some other way. Energy efficiency will be increased due to the potential inclusion of solar panels on the roof of the building which can provide power to the device, although supplemental power will of course be necessary.

B.7 Internal Search

Within the group, many discussions took place in regards to new elevator designs. The main categories of change were determined to be the composition of the car itself as well as the design of the door.

B.8 Concept Generation

Initial IDEO Brainstorming gave 3 new design concepts for the car as shown in figures 1-3 below, as well as 3 new designs for the door shown in figures 4-6. In figures 1-3, blue corresponds to Aluminum alloy, and orange corresponds to steel alloy.

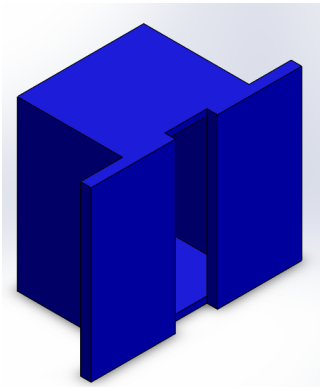

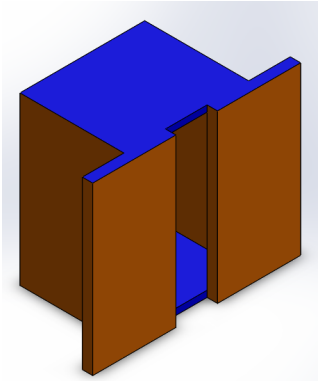

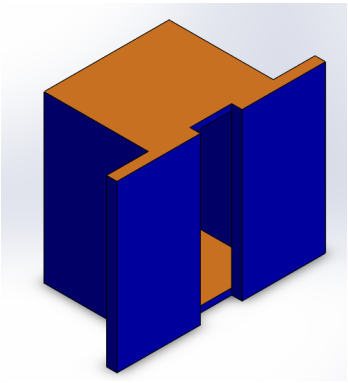

Car Concept 1 Figure 1. Car Concept 2 Figure 2. Car Concept 3 Figure 3.

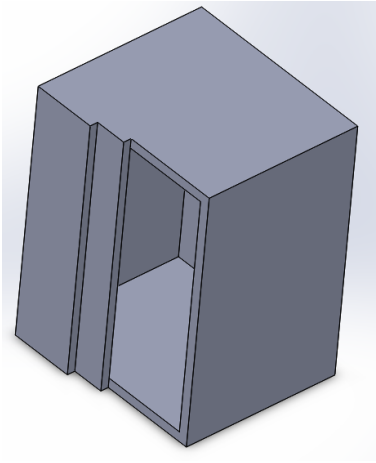

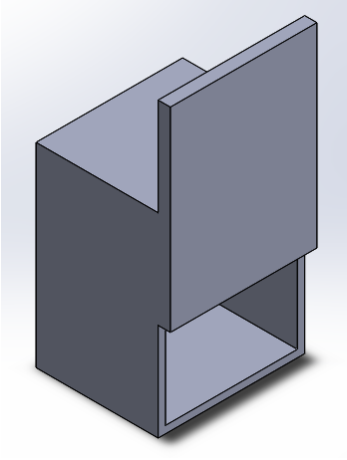

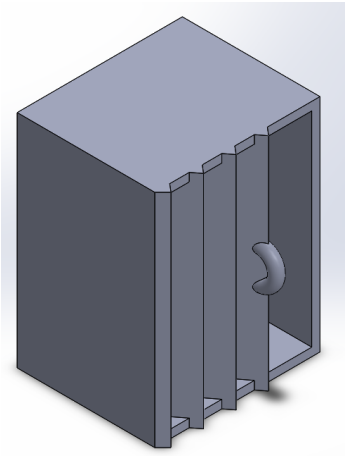

Door Concept 1 Figure 4. Door Concept 2 Figure 5. Door Concept 3 Figure 6.

Figure 1. Car Concept 1 completely replaces all structural elements that would be steel in the original car. The effect is that the car as a whole is much lighter, and thus more energy efficient. The walls of the car will need to be a bit thicker, as aluminum will require more volume for the same strength as steel.

Figure 2. Car Concept 2 replaces only the ceiling and floor with aluminum. This has the benefit of not encroaching on the interior space of the car with the thickness of the walls, but does not reduce the weight of the car nearly as much as designs that utilise more aluminum.

Figure 3. Car Concept 3 uses a large amount of aluminum to decrease weight, but leaves the floor and ceiling to be steel, since those areas are where strength is most needed and so this design creates comparable strength for less cost.

Figure 4. Door Concept 1 comes from the side rather than opening from the center like most standard elevator doors. This design is not as strong as the normal one, but it does allow only one side to be equipped with motors to open and close the doors. The cost could be less for this design.

Figure 5. Door Concept 2 pulls up from the bottom to open. The advantage here is that there does not need to be lateral space for the doors to move into. The door can simply go up along the shaft. This design would however use a lot more energy to operate.

Figure 6. Door Concept 3 has no drive mechanism to open the door. Instead, the user must manually open and close the door. These doors are much weaker structurally because it needs to fold upon itself. It must also rely on untrained people to operate them. The advantage here is that there is a massive energy saving by having people open and close the door.

A Concept map for the concept generation can be viewed here:

http://www.personal.psu.edu/rwm5541/cmap.pdf

C. Concept Selection

C.0 Concept Screening

Concept selection was accomplished using two Pugh Charts. These charts evaluated a number of categories. Appearance also doubles as convenience, and is mostly applicable to the door designs. It refers to whether it aesthetically pleasing and how easy it is to use. Next is weight. Weight is based on how heavy the design is in comparison to the standard. Strength is how strong the car/door is in a situation of equal size. For example, an aluminum wall of the same size and thickness of steel is much weaker. This also serves as a safety evaluation. The cost is the non-recurring cost of the design.. Finally, the energy efficiency is how it ranks in the use of energy. In the case of the elevator car, the weight and energy efficiency are related but not solely dependent on each other. This is the recurring cost. The Pugh Charts can be seen for this evaluation is Appendix A.

Through this process, we came to the conclusion that the best elevator design is an all aluminum car that has the normal door that opens from the center.

C.1 Final Design

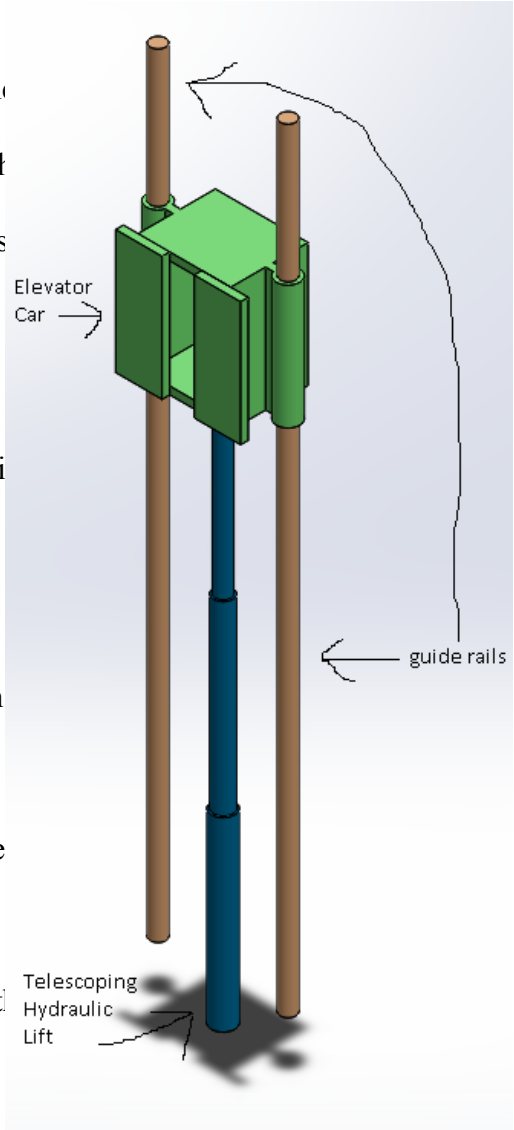

The final design of the elevator is shown on the right. Th shown dimensioned images are approximate averages. Tl dimensions are extremely flexible for the car, in order to s the particulars of the building layout as well as any pre-existing shafts that are to be adapted. This is due to the main goal of this design to be implemented into buildi on the campus that are being renovated, and as such will vary in needed specifications. The lower pole is hydraulically powered and is the direct source of force on the car, and pushes the car to a desired level. The lower pole is telescoping, which allows for a minimal hole to be bored below the elevator. The actual pump that operates the device is not shown, but it utilizes electricity to push t hydraulic fluid in order to lift and lower the car.

D. Review of Design Features

D.0 Part Specifications

Shown on the next page are the detailed drawings of the parts of the elevator. It is important to note that the dimensions given in feet are general guidelines. Each building will have its own unique dimensions that must be adjusted for in the design. The dimensions given are the best standard that can be found, but by no means will fit the size and needs of every building.

Elevator Car: 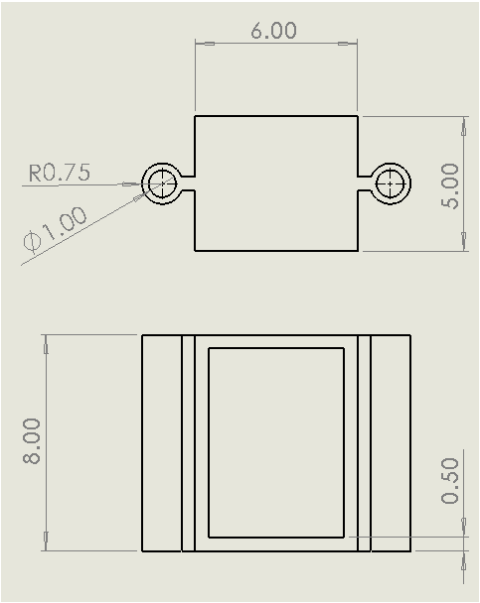

Interior Door: 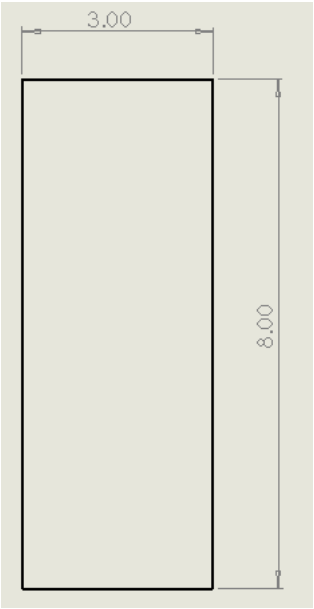

Telescoping pole 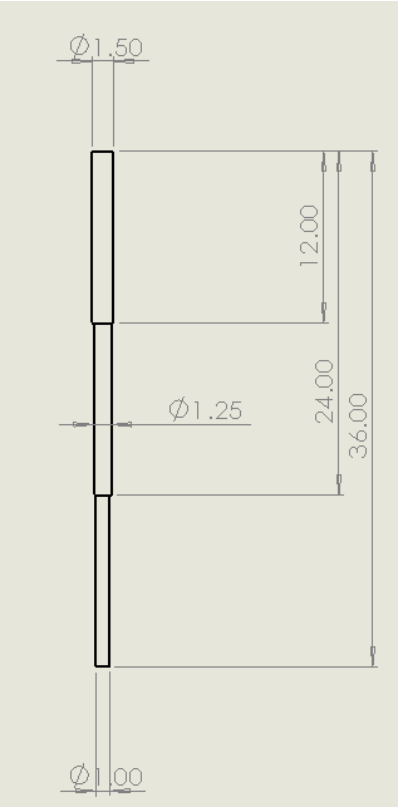

Guide Rail: 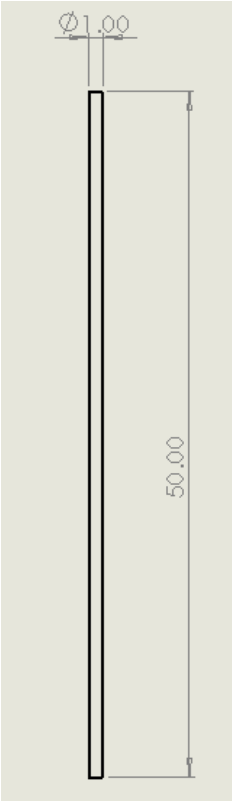

\

For solidworks files of all parts as well as the assembly, please navigate to:

http://www.personal.psu.edu/rwm5541/solidworks.zip

D.1 Design Description

The design has a large advantage over the conventional steel design in that the car itself is about two thirds lighter. The advantages of this weight reduction are immediately obvious in this situation. Less mass means that elevating the car requires much less energy. Aluminum is well known for being light, and the implementation of aluminum into this design is mostly based on this advantage. The internal doors are also made of aluminum to reduce mass. An arguably negative feature of this design is that to achieve the needed strength of an elevator the thickness of the walls must be thicker. The result is less space on the inside for passengers. The slightly higher non-recurring cost of the elevator is offset by the lesser recurring cost to operate the elevator.

E. Analysis of design details

Using the solidworks sustainability module, an analysis of the materials of stainless steel alloy and 6063-O aluminum alloy was performed. For the elevator that had been designed, two different car and door thicknesses were used to represent the fact that more aluminum is needed for the same strength of steel. Solidworks showed that the corresponding weights for these two cars are in a 2:3 ratio. That is, an aluminum car is two thirds the weight of a steel car. With an average steel elevator weight of 2000 pounds, the equivalent aluminum elevators would weigh only 1333 pounds. The advantage of this is immediately obvious when considering a standard rise of 4 stories being 60 feet. The simple potential energy calculation shows an simple energy reduction of 54 kilojoules of energy per trip. Although this individual amount is fairly low in cost, it quickly becomes relevant when the large number of trips are taken into consideration. Shown below is a table showing the energy savings that this redesign can be expected to produce in different situations. It is assumed that the elevator is used to ascend an average of 30 times a day, accounting for much higher use during school session and much less use when not in

session. The table also assumes that the price of a kWh is $.13 and that the cost difference of the aluminum elevator compared to the steel for this specific design is $450.69

Table 4.

Situation	Total number of stories	Energy Saved per full ascension (kWh)	Energy Saved per average ascension (assumed to be 50% of full height)	Money saved per year (USD)	Amount of time before extra cost of Aluminum design pays off (years)
1	4	.0151	.0075	10.67	42.23
2	6	.0226	.0113	16.09	28.03
3	8	.0301	.0151	21.49	20.97

F. Description of Design Operation

The elevator will be accessible by the user in a standard manner. Buttons on the outside of the door can be pushed to call the elevator to one's floor, and buttons within the elevator will indicate what floor to go to. There are also safety buttons for emergency stop and other necessary functions. Beyond what is immediately visible to the user, The elevator is elevated and lowered using the telescoping hydraulic lift located below the car. A pump mechanism is located near the bottom of the shaft. All existing elevator shafts have some sort of space for the machinery. This pump will push the practically incompressible hydraulic fluid in the pipes to push up the lift underneath the car. To go up significant energy is needed in the mechanism, while going down extremely little energy is needed, only enough to keep the descent at a safe pace. Two rails are located to either side that the car is attached to prevent any vertical imbalance. The installation of the elevator will require the removal of a surrounding wall in

order to get the new car in. Most buildings that will implement this elevator on the Penn State Campus will be in the process of renovation, so this should not pose a problem.

G. Life Cycle Analysis

The car in this design of elevator is made out of 6064-O aluminum alloy. This aluminum can be easily procured from recycled sources due to the high recyclability of aluminum, or from mining operations. An average elevator tends to last at least 30 years if not longer. Even at that point, it is mainly the drive mechanism or the circuitry that needs mending after that time, so the car itself should have a long period of use. Pollution from the elevator itself will be nonexistent, as the unit will save energy and thus prevent some pollution into the world. Because of the large availability of aluminum as well as the long term use of this design, sustainability will not be an issue. Economically, The cost to directly produce the elevator will be more expensive than a standard steel car, but as was discussed in more detail in the previous Analysis section, the energy saved will compensate customers for the added cost.

H. Summary

Throughout the duration of the project, we were amazed at the lightness of aluminum. The most effective use of aluminum would easily be incorporating aluminum into some some aspect of transportation. Aluminum is already incorporated into most aspects of transportation such as bikes, cars, and planes. However, the idea that while aluminum is slightly more expensive than other metals such as steel, the energy saved in operation would outweigh the initial purchasing cost. Penn state is now growing pace then it has in the previous decades. By incorporating aluminum elevators in new buildings and replacing the broken elevators with aluminum elevators during the renovation process, a clear way forward can be seen. Our design incorporates the lightness of aluminum into the car itself allowing for significant energy savings that are of great benefit to the benefactor who would operate the elevator.

Appendix A

Table 4. Pugh Chart for Car

		normal		all aluminum		aluminum floor		aluminum sides	
Selection Criteria	Weight	Rating	Weighted Score	Rating	Weighted Score	Rating	Weighted Score	Rating	Weighted Score
Appearance	5%	3	0.15	4	0.2	4	0.2	4	0.2
Weight	10%	1	0.1	5	0.5	3	0.3	4	0.4
Strength	25%	5	1.25	3	0.75	3	0.75	4	1
Cost	20%	5	1	2	0.4	4	0.8	3	0.6
Energy Efficiency	40%	1	0.4	5	2	3	1.2	4	1.6
			0		0		0		0
			0		0		0		0
			0		0		0		0
			0		0		0		0
			0		0		0		0
	Total Score	2.90		3.85		3.25		3.80	
	Rank	4		1		3		2	

Table 5. Pugh Chart for Doors

		normal door		side door		manual door		top door	
Selection Criteria	Weight	Rating	Weighted Score	Rating	Weighted Score	Rating	Weighted Score	Rating	Weighted Score
Appearance	5%	3	0.15	4	0.2	1	0.05	3	0.15
Weight	10%	3	0.3	3	0.3	5	0.5	3	0.3
Strength	25%	5	1.25	4	1	1	0.25	5	1.25
Cost	20%	3	0.6	3	0.6	4	0.8	2	0.4
Energy Efficiency	40%	3	1.2	3	1.2	4	1.6	1	0.4
			0		0		0		0
			0		0		0		0
			0		0		0		0
			0		0		0		0
			0		0		0		0
	Total Score	3.50		3.30		3.20		2.50	
	Rank	1		2		3		4	