1.0 Introduction

Our design subject was the incorporation of aluminum into the design of elevators on campus, as well as looking at ways to improve the overall design of elevators. Initial research showed that the lighter weight of aluminum would not be of much benefit to counterweighted elevators, where the weight is not as important. However, many elevators on campus are powered hydraulically, which would gain a significant energy benefit from a weight reduction. Once the overall idea of elevators had been narrowed down to hydraulic passenger elevators, we were able to begin the design process.

1.1 Mission Statement

To create an hydraulic passenger elevator design that improves upon normal design through the use of aluminum.

2.0 Customer Needs Assessment

The problem of addressing customer needs in the industry of elevators is to define exactly who the customer is. There are two main areas this can be addressed: The people who use the elevator for transit and those that own the facility in the elevator and/or are responsible for maintaining it. For our purposes, we will be mainly addressing the needs of the owner, as they will be the ones who make the decision of what elevator to get. However, the needs of the user are not to be ignored, as they are also of great importance, but ultimately can be sacrificed if they conflict with the needs of the owner. To gather these customer needs, we looked at the websites for many elevator manufacturers, such as OTIS. These websites show what they advertise in their elevator sales, as well as showing what buyers thought of the elevators. There is potential bias here, since the companies will mainly want to show their company in a positive light, however they give a good general idea. We also talked to many people

regarding what they want to improve with elevators, but this was not as helpful due to the fact that they often disregard price and safety in their considerations.

2.1 Weighting the Customer Needs

As previously stated, the needs of the owner need to be of higher consideration. If meeting the needs of the user conflicts with the needs of the owner, the owner must take precedence in this evaluation.

Table 1. Initial Customer Needs List Obtained Through Online Research and Interviews

Cost to operate
Low initial Cost
Durable
Easy to maintain
Swift
Smooth ride
Easy to use
Safe
Aesthetically pleasing

Table 2. Hierarchical Customer Needs List

1. Safety
F.1 Meets ASME A17.2 Standard for passenger elevator safety
2. Cost to operate
F.1 Energy Efficient
3. Easy to maintain
F.1 Can be repaired and maintenance by conventional methods
4. Durable
F.1 Will not wear down permanently easily
5. Smooth Ride
6. Easy to operate
7. Swift
8. Aesthetically pleasing

From our customer needs analysis, we determined that what we should focus on is the perfecting of the energy efficiency of elevator design due to the fact that cost to operate is the highest need that we can address. This can be achieved by a number of methods. In terms of the top customer need, safety, there is little room for innovation because elevator designs are already at maximum reasonable safety level. The concerns of the customer such as smooth ride and speed, are very difficult to address in a structural redesign, in addition to potentially compromising safety.

2.2 Revised Problem Statement

After observing the customer needs within the market that would be purchasing this elevator, we determined that what we need to focus on is how to make the elevator lighter than standard ones now without compromising on safety. Over all of Penn State's 20 campuses 400 million kilowatts of energy is consumed a year. University Park consumes approximately 80% of the total energy. Only 45 million kilowatts is produced by the school by the East and West steam plants. The rest is purchased mainly from West Penn Power for University Park campus. This means that one of our focuses will be trying to reduce energy costs on University Park's campus through the redesigning of elevators.

3.0 External Search

Most information regarding elevators can be readily found online. Most manufacturers list their design specifics. It is also beneficial that for the most part all hydraulic elevators work on the same principle, and if one understands how one works, they will have a reasonable understanding of other elevators.

3.1 Literature Review

When looking at documentation, we found that the websites for elevator manufacturers, such as OTIS, a major elevator manufacturer in the United States, were the most informative. They documented how their elevator designs worked as well as what structure was needed for one and also documented the regulations that needed to be followed.

3.2 Patent Search

Table 3. Art-function Matrix for Elevators

Function	Art		
	Elevator Door Lock	Elevator Door Controller	Solar Powered Elevator design
Keep Doors shut	EP 1886963 B1		
Easily open and close doors		WO 2004028951 A1	
Provide supplementary power to elevator			CN 202116117 U

3.3 Design Target

The new elevator must be evaluated in a number of aspects. The strength of the elevator must be weighed to be comparable to the normal steel design with nonexistent chance of injury. The weight of the car when empty will also be evaluated, a reduction in weight will reduce the energy needed to move the car. Different door designs must be more energy efficient or stronger in some other way. Energy efficiency will be increased due to the potential inclusion of solar panels on the roof of the building which can provide power to the device, although supplemental power will of course be necessary.

4.0 Internal Search

Within the group, many discussions took place in regards to new elevator designs. The main categories of change were determined to be the composition of the car itself as well as the design of the door.

4.1 Concept Generation

Initial IDEO Brainstorming gave 3 new designs for the car, as well as 3 new designs for the door. In the images below, blue corresponds to Aluminum alloy, and orange corresponds to steel alloy.

1. 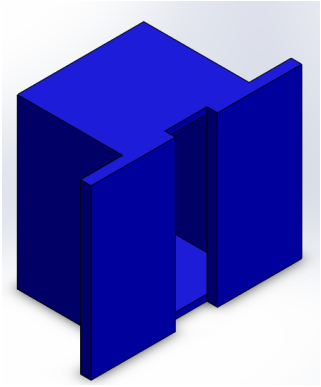
2. 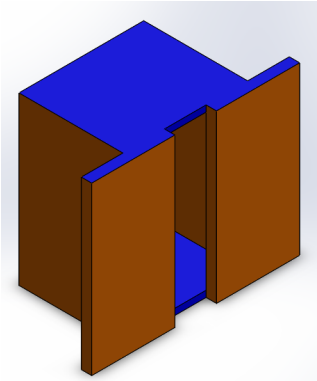
3. 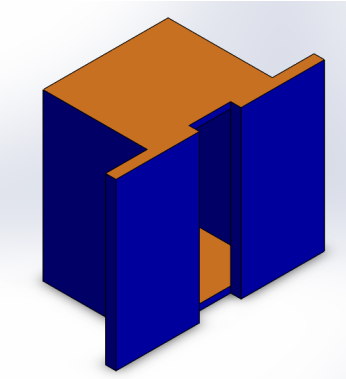

4. 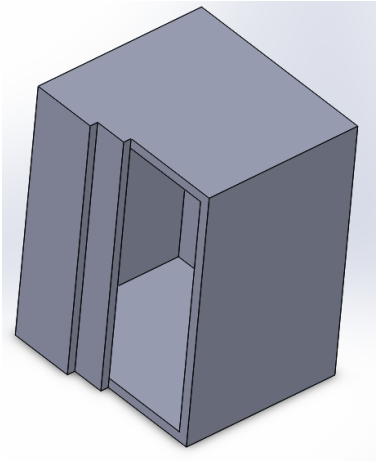
5. 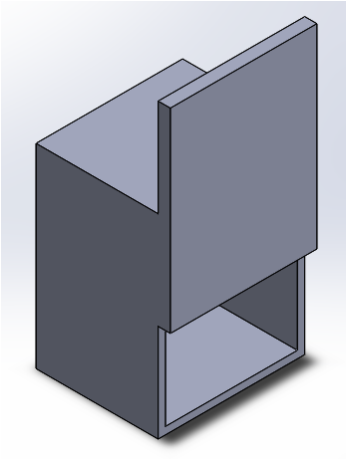
6. 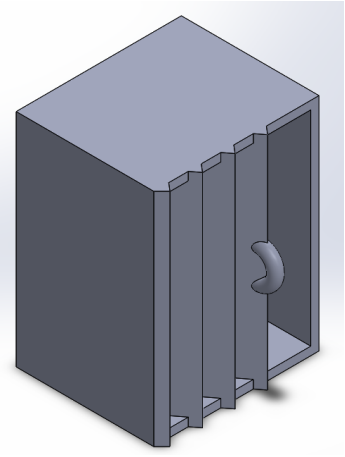

1. This design completely replaces all structural elements that would be steel in the original car. The effect is that the car as a whole is much lighter, and thus more energy efficient. The walls of the car will need to be a bit thicker, as aluminum will require more volume for the same strength as steel.

2. This design replaces only the roof and floor with aluminum. This has the benefit of not encroaching

on the interior space of the car with the thickness of the walls, but does not reduce the weight of the car nearly as much as designs that utilise more aluminum.

3. This design uses a large amount of aluminum to decrease weight, but leaves the floor and ceiling to be steel, since those areas are where strength is most needed and so this design creates comparable strength for less cost.

4. This door design comes from the side rather than opening from the center like most standard elevator doors. This design is not as strong as the normal one, but it does allow only one side to be equipped with motors to open and close the doors. The cost could be less for this design.

5. This design pulls up from the bottom to open. The advantage here is that there does not need to be lateral space for the doors to move into. The door can simply go up along the shaft. This design would however use a lot more energy to operate.

6. This design has no mechanism to open the door. Instead, the user must manually open and close the door. These doors are much weaker structurally because it needs to fold upon itself. It must also rely on untrained people to operate them. The advantage here is that there is a massive energy saving by having people open and close the door.

A Concept map for the concept generation can be viewed here:

http://www.personal.psu.edu/rwm5541/cmap.pdf

4.2 Concept Selection

To select which concepts we are going to continue with, two Pugh Charts were used. These charts evaluated a number of categories. Appearance also doubles as convenience, and is mostly applicable

to the door designs. It refers to whether it aesthetically pleasing and how easy it is to use. Next is weight. Weight is based on how heavy the design is in comparison to the standard. Strength is how strong the car/door is. This also serves as a safety evaluation. The cost is how much it takes to make that design initially. Finally, the energy efficiency is how it ranks in the use of energy. In the case of the elevator car, the weight and energy efficiency are related but not solely dependent on each other.

Table 4. Pugh Chart for Car

		normal		all aluminum		aluminum floor		aluminum sides	
Selection Criteria	Weight	Rating	Weighted Score	Rating	Weighted Score	Rating	Weighted Score	Rating	Weighted Score
Appearance	5%	3	0.15	4	0.2	4	0.2	4	0.2
Weight	10%	1	0.1	5	0.5	3	0.3	4	0.4
Strength	25%	5	1.25	3	0.75	3	0.75	4	1
Cost	20%	5	1	2	0.4	4	0.8	3	0.6
Energy Efficiency	40%	1	0.4	5	2	3	1.2	4	1.6
			0		0		0		0
			0		0		0		0
			0		0		0		0
			0		0		0		0
			0		0		0		0
	Total Score	2.90		3.85		3.25		3.80	
	Rank	4		1		3		2	

Table 5. Pugh Chart for Doors

		normal door		side door		manual door		top door	
Selection Criteria	Weight	Rating	Weighted Score	Rating	Weighted Score	Rating	Weighted Score	Rating	Weighted Score
Appearance	5%	3	0.15	4	0.2	1	0.05	3	0.15
Weight	10%	3	0.3	3	0.3	5	0.5	3	0.3
Strength	25%	5	1.25	4	1	1	0.25	5	1.25
Cost	20%	3	0.6	3	0.6	4	0.8	2	0.4
Energy Efficiency	40%	3	1.2	3	1.2	4	1.6	1	0.4
			0		0		0		0
			0		0		0		0
			0		0		0		0
			0		0		0		0
			0		0		0		0
	Total Score	3.50		3.30		3.20		2.50	
	Rank	1		2		3		4	

Through this process, we came to the conclusion that the best elevator design is an all aluminum car that has the normal door that opens from the center.