Project 2: Lockheed Martin

With Junfeng Ma

Created By: Rachel Stiller

Our second project of the semester was sponsored by Lockheed Martin. They gave us five different projects and we were instructed to pick one as a group. Our group choose the fifth project which was to redesign an existing part of Lockheed Martin's and use Additive design and manufacturing to improve the overall quality of the product. The design process began with searching externally about what additive design is and also with finding and already existing patent to begin the designing process. Additive Design is also known as three dimensional printing. 3D printing not only reduces the manufacturing time but also reduces costs, waste, and the need for expensive materials. There are seven different types of additive manufacturing such as material extrusion, material jetting, binder jetting, vat photopolymerization, powder bed fusion, directed energy deposition, and sheet lamination. After learning about all of these, material extrusion (above and to the left) was the cheapest and most efficient means of additive design for this project. Penn State has many makerbot 3D printers and with this type of additive manufacturing we would be able to print our solid works model. We went ahead and searched endlessly for existing patents to redesign for Lockheed Martin. It was more difficult than we expected and we ended up choosing a smaller part that was a section of a bigger product. We finally chose a water filtration device and just redesigned the filter. In order to redesign the product, we followed the design process from project one. We searched externally, internally, modeled solutions with clay, drew pictures out, made many combinations of products and even created a solid works model in order to ensure the best design. While doing these things, we kept in mind our goal and mission of the project and kept the customers' needs in mind. We wanted the filter to be lightweight, easy to use, and successfully be able to be additively manufactured in every country. We replaced the ceramic and graphene layers of the filter while simple plastic used in additive manufacturing. This cut the cost extremely and made it much easier to be produced. This project was important to us because many people cannot just go out and buy a Brita to get healthy and clean drinking water. Many people in third world countries and in the military are dying and spreading horrible diseases because they are drinking water that is not purified properly. Our design reinvented the water filter and makes it cheap enough to be distributed to those third world countries and the military soldiers. We met the requirements, we met our personal goal for this project and made a project that seemed impossible, possible.

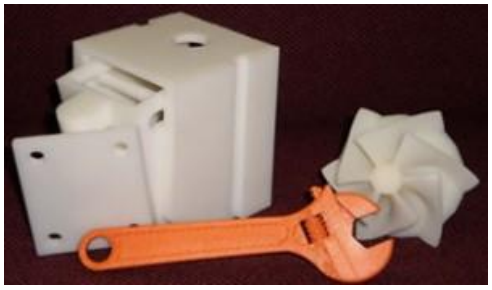

Original Filter:

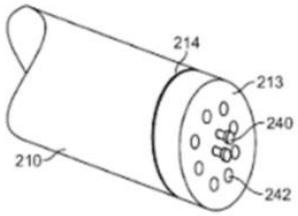

FIG. 3
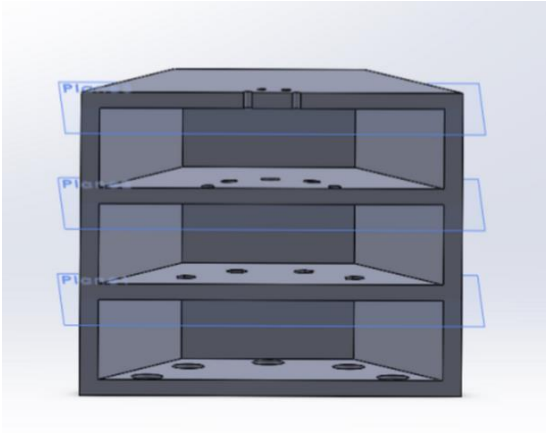
Our Redesigned Filter: