Harris Project

Team 5- Team No Name

Chris Chesko: cwc5426@psu.edu
Rachel Perini: rqp5167@psu.edu
Elaina Ripepi: ezr5050@psu.edu
Kayleigh Tinjar: kat5320@psu.edu

Pennsylvania State University
College of Engineering
EDSGN 100: Fall 2012
Wallace Catanach

Content:

- Introduction
- Mission Statement
- Abstract
- Customer Requirements
- Need Statements
- Project Timeline
- Selected Situation Details
- Cell Phone Surveys and Graphs
- Energy Sources Research
- Product Specs and Target Specifications
- Benchmarking
- Clarifying the Problem
- Functional Diagrams
- Additional External Research
- Concept Screening
- Concept Scoring
- Field Testing
- Final Specifications
- Projected Cost
- Final Design
- Conclusion
- Sources

Introduction

Cellular phones are an integral part of today's society. However, in order to use a cell phone, it is necessary for its battery to be charged. Typical phone chargers utilize household electricity through the wall outlets. By using an alternative energy source to charge a cell phone, one is able to conserve energy while saving money on electricity. A number of these alternative energy chargers can be used away from wall outlets while on-the-go in various situations, such as when one is in nature and away from a conventional energy source. As electricity is not an available option in such a scenario, alternative energy chargers are vital to charging a cell phone and reconnecting with the world. While designing this charger, we did research on many variables and took into consideration the size, efficiency, price and durability of our proposed design.

Mission Statement

Phone: iPhone/Smartphone w/ USB hook-up cable

Situation: Hiking in Deciduous Temperate Forest

As students in the College of Engineering at the Pennsylvania State University, it is our goal to continue to challenge ourselves through multiple design projects. We have been assigned the task of creating a cell phone charger that utilizes two alternative energy sources. Our goal is to design such a portable cell phone charger that can be used in both every day and emergency situations. Through the use of the engineering design process, we will create a functional, affordable, and convenient phone charger to meet Harris's needs.

Abstract

Harris Corporation gave our team, Team No Name, the task of building a mobile electronics alternate charging system. During class, our team brainstormed on many possible ideas for this project. First, we decided on the use-case scenario. Before choosing our exact design, we wanted to know where the product would be used. After deciding it would be used in a forest/hiking scene, the type of energy to be used was brainstormed next. We based the types of energy we chose off of how effective they would be in the use-case scenario. After taking into account many different types of energy and putting them through a selection matrix/concept scoring, we finally decided that kinetic and thermoelectric energy would most effectively work as our alternate sources of energy. Then, we conducted research on designs previously created that utilized either of these sources of energy. We then refined our previous ideas accordingly. We also did some field testing to learn more about our two sources of energy. Finally, we designed our alternate energy charger with customer needs in minds, as it not only does its job as an alternate charging system, but is also comfortable, convenient, and affordable. We created a Solid Works model of our design and decided on a catchy name for our product. We chose to communicate our new product, The Journey Generator, through a visually appealing poster and brochure.

Customer Requirements

- The charger utilizes two alternative energy sources.
- The charger is able to fully energize a phone using a source of power other than electricity from an outlet.
- The charger meets the needs of the specific “use” case chosen.
- The charger is affordable and durable.
- The charger is both environmentally and user friendly.
- The charger takes into account the multiple constraints of the “use” case.

Selected Situation Details

This project has been specifically designed around a use-case scenario. As a group, we decided on a scenario that could realistically happen to somebody. We chose a hiking environment, such as forests, mountains, and trails. It is very likely for even the most experienced hikers to get lost while hiking. In such cases they may have to use their cell phone or other battery-powered devices to get back on track. However, if such devices run out of battery, the hikers could potentially be in a desperate and dangerous situation. Our portable battery charger will allow these hikers to charge any device that utilizes a USB cord. The charger can be used while walking, allowing the hiker to continue to hike while charging his/her device.

Customer Needs Statements

Customer Needs	
Customer Statement	**Customer Need**
Develop a charger system for mobile devices that operates from energy sources other than standard wall or vehicle power.	Charger uses non-traditional energy source.
The charger system will be designed for a specific mobile device and pattern of use (a.k.a. “use case”).	Charger is designed for specific environment and device usage.
Harris RF Communications (http://rf.harris.com/) is the leading global supplier of secure radio communications and embedded high-grade encryption solutions for military, government, and commercial organizations	Charger meets Harris' expectations as a leading global communications supplier.
Harris RF Communications is also a leading supplier of assured communications systems and equipment for public safety, utility, and transportation markets, with products ranging from the most advanced IP voice and data networks to portable and mobile single- and multiband radios.	
Understanding these resources is a key element of this project.	Design reflects understanding of alternative energy resources.
It must successfully address the use case that you have identified. Constraints such as weight, size, cost, ease of use, ruggedness, etc., will depend on the identified use case.	Design addresses use case, taking into account multiple constraints and demands.
It must use two different sources of “alternative energy”	Charger is powered by two different alternative energy sources
Economic viability – describe overall system economics and compare to other possible solutions for the use case, i.e., a consumer may not be willing to spend as much for the convenience, but a first-responder may to ensure connectivity.	Charger is economically viable.
Environmental impact – describe the pros and cons of your system’s environmental impact	Charger is safe for both users and environment.
Safety – identify potential safety issues and describe how these issues are addressed	

Project Timeline

Harris Project: Phone Charger			10/22/2012					29-Oct					5-Nov					12-Nov					19-Nov					26-Nov					3-Dec					10-Dec				
			M	T	W	T	F	M	T	W	T	F	M	T	W	T	F	M	T	W	T	F	M	T	W	T	F	M	T	W	T	F	M	T	W	T	F	M	T	W	T	F
Tasks	Owner(s)	% compl																																								
Analysis of Customer Needs	All	100%																																								
Customer Requirements	Chris		X		R																																					
Selecting Energy Sources and Situation	Elaina				A																																					
Background Information on Energy Sources	Kayleigh				A																																					
Energy Source Survey	Rachel				A																																					
Other Surveys					E																																					
Research of Project					C																																					
Needs Statements					E																																					
Review					A												X																									
Establish Target Specifications		100%																																								
Product Spec Metrics & Matrix										R																																
Set target specifications										A																																
Benchmarking																																										
a. Existing structures										A																																
b. Existing Designs and Energy Sources										A																																
Develop a cost model										C																																
Review										A							X																									
Concept Generation		100%																																								
Clarify the problem														C																												
Develop a functional diagram														K																												
External search		100%																																								
a. Literature Review														E																												
b. Patent Search														C																												
Brainstorming														A																												
Review														A								X																				
Concept Selection (Iterate as required)		100%																																								
Concept screening																																										
Prepare the selection matrix																				R																						
Rate the concepts																				A																						
Rank the concepts																				A																						
Combine and improve the concepts																				A																						
Select one or more concepts																				A																						
Review																				A						X																
Concept scoring		100%																																								
Prepare the selection matrix																													R													
Rate the concepts																													A													
Rank the concepts																													A													
Combine and improve the concepts																													A													
Select one or more concepts																													A													
Review																										X			A													
Establish Final Specifications		100%																																								
Maintenance Reqiurements																													C													
Examination of Manufacturing Processes																													A													
Update final specifications																													A													
Review																													A													X
Design and build		100%																																	K							
Detail Design																																			K							
Prototype Construction (CAD)																																			K							
Review																																										
Report Reparation																																										
Abstract																																			E							
Introduction		100%																																	A							
Mission Statement		100%																																	C							
Customer Needs Analysis																																			R							
External Research																																			K							
Concept Generation																																			E							
Concept Selection																																			R							
Design																																			A							
Conclusions																																			C							
References																																			A							
Presentation		100%																																								
Prepare the presentation																																										A
Present																																										A
Milestones																						X				X																X

Surveys and Graphs

In order to gain a better understanding of the task at hand and customer expectations, our group conducted an anonymous survey. The survey was administered to forty Penn State Students asking them several questions about their own cell phones. The survey was taken online through a Google form in which all submissions remained anonymous. All forty students, ages ranging from 18 to 22, voluntarily participated.

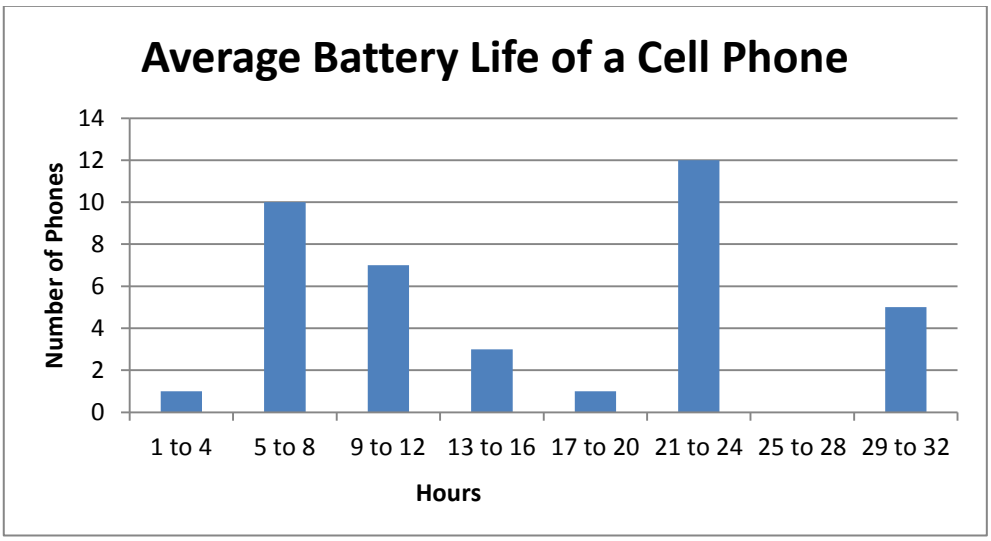

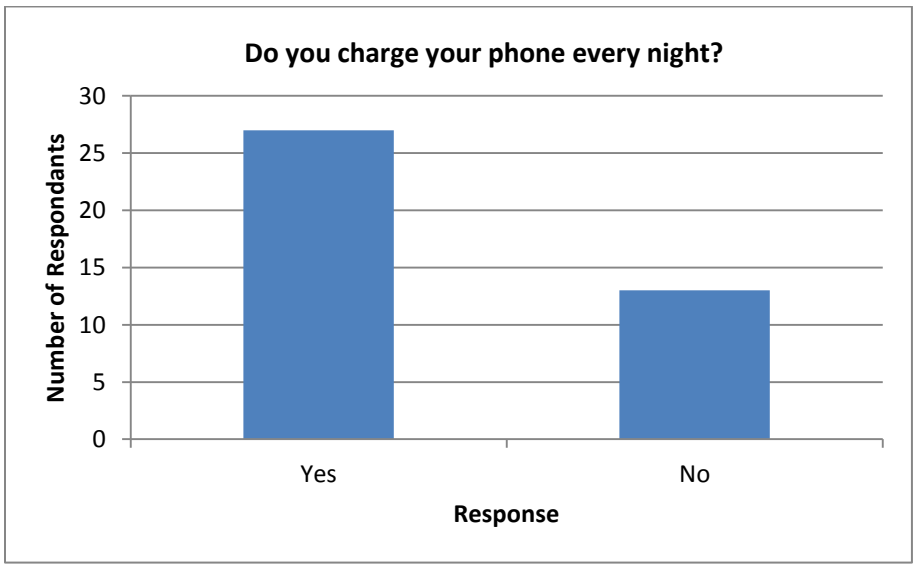

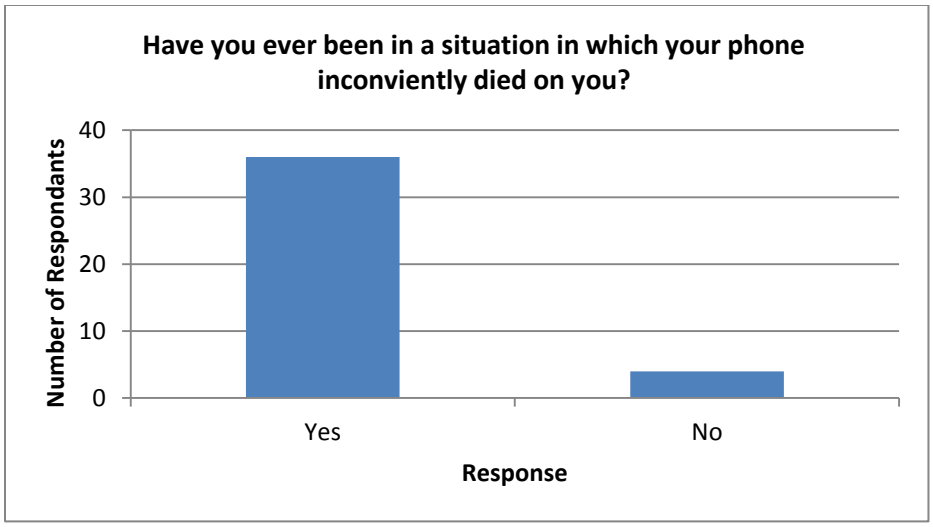
Have you ever been in a situation in which your phone inconviently died on you?
Number of Respondants
40
30
20
10
0
Yes
No
Response

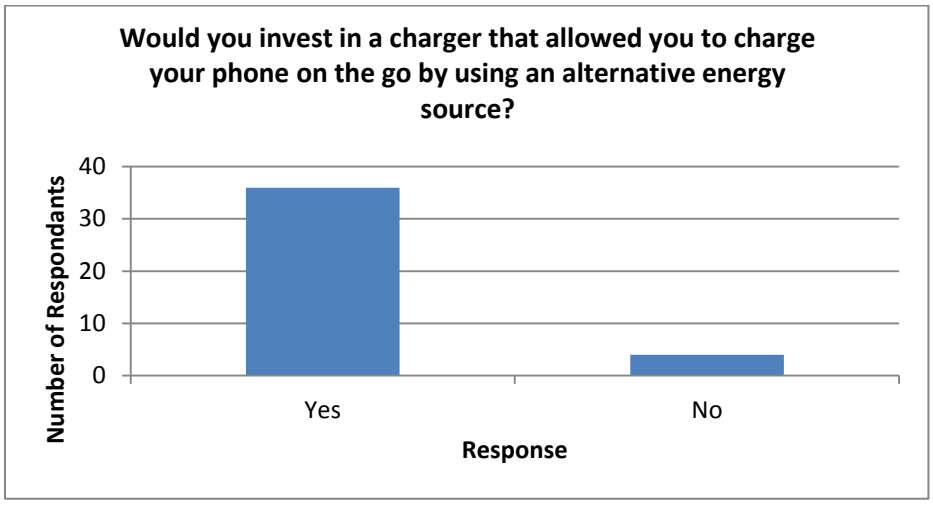
Would you invest in a charger that allowed you to charge your phone on the go by using an alternative energy source?
Number of Respondants
40
30
20
10
0
Yes
No
Response

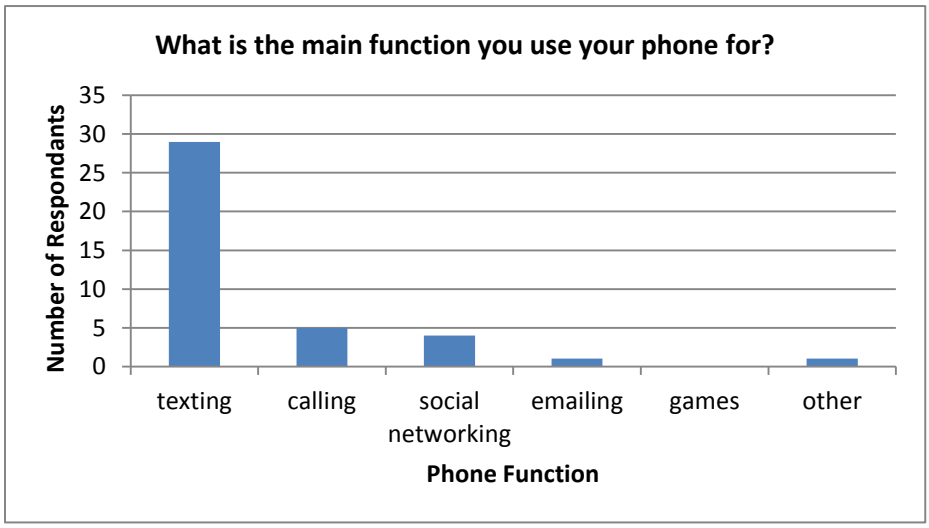
What is the main function you use your phone for?
Number of Respondants
35
30
25
20
15
10
5
0
texting
calling
social networking
emailing
games
other
Phone Function

Alternative Energy Sources Research

After brainstorming potential alternative energy sources, our group decided to conduct further research on each source. Below we have summarized several different types of energy sources including: kinetic, friction, solar, and thermo. We also included some background research on cell phone chargers.

Thermoelectric Generators

Thermoelectric generators use temperature difference to generate electricity. This temperature difference is caused by the generator being in contact with two different substances, one hot and one cold. In an electric circuit, when two different conductors of different temperatures are joined a current flows. Every metal has a different density of its free electrons, so when two different metals come in contact with each other they become oppositely charged and create a potential difference across the junction. The greater temperature difference between the two metals, the more easily their electrons can flow into each other, creating more current. In the past a large temperature difference was needed to get a sufficient current flowing, but now the Fraunhofer Insitute has developed circuits that run on very low voltage (200 milivolts) which can generate current from very small temperature differences (less than 1 degree once the circuits are perfected). We could use temperature difference to generate electricity for our charger because our use case is hiking outdoors so there will be a temperature difference between user's body heat and the outdoor temperature. A TEG can also be made at "base camp" after hiking by hooking it up to a hot cooking pot or kettle. This alternative energy source harvests energy from its surroundings and takes advantage of readily available resources. It creates little negative impact on the environment. The only downside to using this alternative energy source for our charger is that it can be expensive to build circuits like Fraunhofer's that would allow us to generate enough electricity to charge a phone even if it is hot outside and the temperature difference between body and environment is not very big. [1]

[1] http://www.newswise.com/articles/triboelectric-generator-captures-power-from-friction

Kinetic Powered Phone Charger

The *kinetic powered charger* utilizes the movement and energy produced through the movement of the body that can be used to charge a phone. Whether you are walking, running, or biking, this charger is able to convert the energy of your body's motion into energy that can be used to charge your phone. It is rather similar to a mechanical watch, which uses the swinging motion of one's arm to produce energy and it is well known for being very energy efficient.

When walking, the kinetic powered phone charger will be able to convert the energy from the shock force that is produced when you take a step into stored electricity that you can use to charge your phone later. As due to the shock force produced during walking, the magnetic forces within the charger are changed, which then allows an electric current to be created, as demonstrated by Faraday's Law, thus powering the charging device. Also, the energy produced by the up and down movement of your body and the swinging of your arms when taking a step can be converted into energy for the charger. This energy is transferred as a weight located within the charger moves along with the motion of the body which then generates electricity within a series of coils, thus charging its battery.

Although other forms of energy - such as solar power, water power, and wind power - that can be utilized to charge electronic devices are very efficient and effective, they may not always be available for use in every situation. For example, if your phone battery dies while you are hiking in some remote place on a cloudy day, water and sun may not be available for you to energize your phone. A kinetic charger would be extremely effective as you will not have to rely on the outside variables of your surroundings and you can simply recharge your phone literally by hand.[2]

---

[2] http://www.npowerpeg.com/
http://www.gizmag.com/the-etive-kinetic-energy-charger-gives-power-walking-a-whole-new-meaning/11750/

Solar Powered Phone Charger:

The sun is one of many natural resources that is available for use in most everyday life. Therefore, a phone charger that converts the energy of sunlight into power for a phone battery would be very beneficial in a number of situations. The *solar powered phone charger* is made of photovoltaic cells, just like any other variation of solar panels, which is created between the imbalance of positively and negatively charged particles within the silicon of the solar phone charger by adding the impurities boron and phosphorus. This imbalance creates an electrical field in the silicon. When photons strike the material and break electrons free from their orbits, this electrical field pushes them toward the front of the solar cell, which creates a negatively charged side. The protons left behind on the other side of the cell surface create a positive charge. When these two sides are connected using an external load -- an indirect circuit like the terminals of this solar battery charger -- the electrons flow into the load and creates electricity. Since a single solar cell only produces one or two watts of electricity, multiple cells are combined to form modules that work together to produce enough power to charge a battery. This form of energy is therefore very effective, especially when one is partaking in outdoor activities, such as hiking.[3]

[3] http://illminatus.hubpages.com/hub/How-does-a-Solar-Power-Cell-phone-work-Your-guide-to-the-top-5-Solar-Cell-phone-Chargers-on-the-market
http://electronics.howstuffworks.com/gadgets/travel/solar-battery-chargers1.htm
http://store.solio.com/Solio-Store/Solio-Bolt-Solar-Charger-S620-AH1RW

Triboelectric Generator

A triboelectric generator captures energy from friction. The amount of energy is small; however, there is significant potential in using this generator as an alternative power source. The generator takes simple mechanical energy produced from rubbing two surfaces together and creates a current flow. In particular, the generator works when creating friction between a polyester and polydimethysiloxane (PDMS) piece of material. Electrons transfer from the polyester material to the PDMS. The two materials are only rubbed together for a short period of time. Once separated, a dipole moment occurs, leaving a charge behind. By doing this motion multiple times successfully, an alternating current is created. In order for this to work, two different materials must be used. Also, materials with textures produce a bigger charge. Studies have shown that pyramid shaped details create the most friction in comparison to straight lines and cubes. In addition to effectively capturing energy, triboelectric generators are cost effective and relatively cheap to make. This triboelectric generator has become an interest for our team. The generator is able to create energy from friction which is a source of energy we encounter on a daily basis. Our team brainstormed the idea of using this generator within a pair of gloves. Not only would these gloves create external charge when being rubbed together, but they would also provide the customer with body warmth. We would chose materials that would produce a sufficient amount of power to charge a phone battery when rubbed together.[4]Below is a picture of patterning that may be used within the generator that maximizes the amount of current produced.

---

[4] 9.www.howstuffworks.com
10.www.archiv.fraunhofer.de/archiv
11.www.gizmag.com
12.www.sciencedaily.com
13.www.its.org

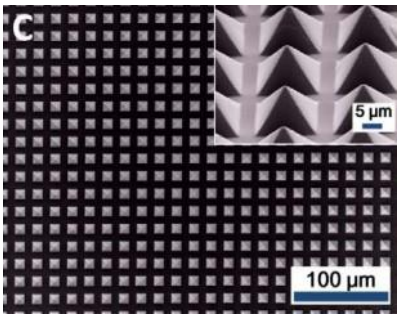

Pedometers

A pedometer bases its operation by sensing the impact of the foot with the ground. There are two different types of sensors used in pedometers that both effectively work. One type is the simple pendulum or swing-arm system, while the other is a digital system that uses accelerometer technology. The pendulum system contains a simple pendulum that swings back and forth, making contact with a post each time a step is taken. Another example of a pendulum type system is a ball system. Much like a pendulum, this internal ball moves up and down with the motion of the person wearing the pedometer. As the ball moves up and down, it activates a switch that clicks the counter forward. Most of these pendulum type systems also contain electronic filter circuits that prevent non-steps from being counted as steps. A more advanced system is a digital system, which contains certain software inside the pedometer that measures movement. Examples of this software include internal gyroscopes and accelerometer technology. This advanced technology uses electronic sensors placed 90 degrees apart, allowing the pedometer to work in any position.

We chose to research information on the technology behind a pedometer because we were curious about the way the internal system operated and generated energy to measure steps. Hiking in the middle of the forest obviously requires walking, so naturally we thought about different devices that measured the movement of walking, and decided that the science behind a pedometer could possibly provide us with an idea of how to charge a phone while walking.[5]

---

[5] http://www.bodytronics.com/page/bodytronics/PEDOMETERSHOWWORK
http://www.wisegeek.com/how-does-a-pedometer-work.htm

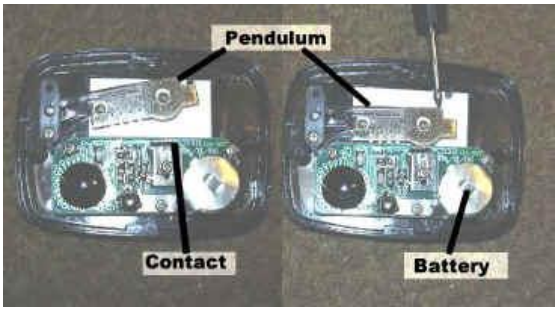

Pendulum System

External research on Cell Phone Chargers

All phone chargers and their batteries operate on one principle: converting stored chemical energy into electrical energy and vice versa. When a battery is connected to an electronic device, the stored chemical energy in it is converted to electrical energy through a reaction in the battery itself. When the device is connected to a charger, the electrical energy from the charger is converted into chemical energy that can be stored in the battery.

Most cell phones use lithium-ion batteries. To further explain the process of charging a phone, we must understand the science inside of a lithium-ion battery. Inside the battery there is a cathode made up of lithium metal oxide and an anode made up of carbon. These are separated by an electrolyte conductor. When a phone is connected to a charger, the lithium ions flow from the cathode to the anode, powering the phone. However, when the phone is being used, the ions flow in the opposite direction and drain the phone of its battery.

There is a certain energy output involved at each charging stage of a battery. As a phone is first connected to the charger, its battery's voltage quickly and significantly increases. The battery then enters into its second stage as its voltage peaks and the current begins to decrease. The charger cuts the current off completely at stage three as the phone is fully charged. Finally, the battery enters into standby mode, stage four, as it is only supplied with a "topping charge" if it drops below a certain voltage. In the case of different types of chargers, all use the same concept of taking electrical energy that is sent through the charger and converting it into stored chemical energy in the battery. For instance, a car charger takes the electrical energy produced by the car's battery to charge the battery.[6]

[6] http://techtips.salon.com/cell-phone-charger-works-4515.html

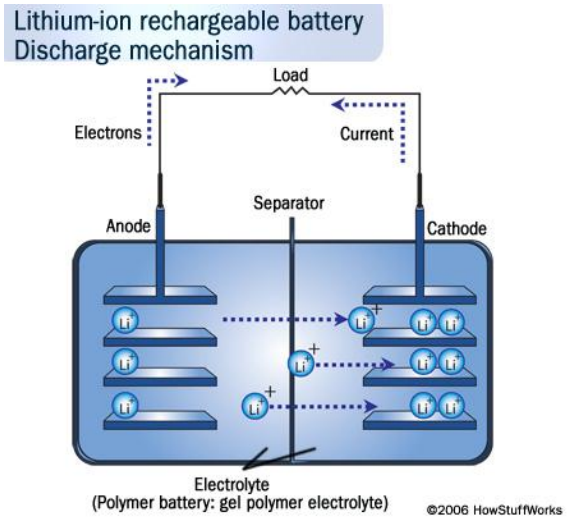
Lithium-ion rechargeable battery
Discharge mechanism
Load
Electrons
Current
Separator
Anode
Cathode
Electrolyte
(Polymer battery: gel polymer electrolyte)
©2006 HowStuffWorks

Target Specifications

Needs Metric Matrix

Needs Metric Matrix												
Need		Metric										
		Designed for iPhone 4s	Designed for hiking	Survives 7 foot fall	Waterproof up to 1in deep	Portable (Fits in a standard backpack)	Under 3 lbs.	Uses mechanical energy	Uses thermoelectric energy	Produces 5V total voltage	Under $150	Easy to use(10 year old can figure it out)
		1	2	3	4	5	7	8	9	10	11	12
1	Uses non-traditional energy sources							x	x			
2	Designed for specific usage		x	x	x	x	x					x
3	Designed for specific device	x								x		
4	Charger meets Harris' expectations as a leading global communications supplier.									x		x
5	Reflects understanding of alternative energy resources.							x	x	x		
6	Addresses use case constraints		x	x	x	x	x					
7	Powered by two different alternative energy sources							x	x			
8	Economically viable										x	
9	Safe for user			x	x		x					x
10	Safe for environment		x					x	x	x		

Benchmarking

Details of several thermoelectric and kinetic powered products Including:

1. tPOD5 Packable Off-Grid Power Generator
2. G2-56-0375 Thermoelectric Module
3. nPower PEG
4. The Go Mechanical Charger

Tellurex Thermoelectric Power Generation

Mission of Tellurex:
Tellurex designs and produces thermoelectric devices for both personal and military use worldwide. They currently manufacture a variety of thermoelectric generators that feature different heat sources, efficiency levels, and sizes. Tellurex is leading research in new thermoelectric materials, nano-thermoelectric technology, and increasing thermoelectric efficiency to turn more waste heat into usable energy.

Product 1 tPOD5 Packable Off-Grid Power Generator

General Generator Details for tPOD5:
Heat source: camp or kitchen stove
Use: camping, home emergency
Compatible with: iPhone, Android, LED lights, Kindles, MP3 players, GPS devices, and tablets.

Thermoelectric Details:

- Power output: 5 watts (steady after a five-minute heat load)
- Power connection: USB cord
- Weight: 1.3 kg
- Dimensions: cylinder with 3in diameter and 3in height
- Price: $139

More information can be found at http://www.buytpod.com/products-page/featured/tpod5
And http://www.tellurex.com/

Product 2: G2-56-0375 Thermoelectric Module

Physical Characteristics

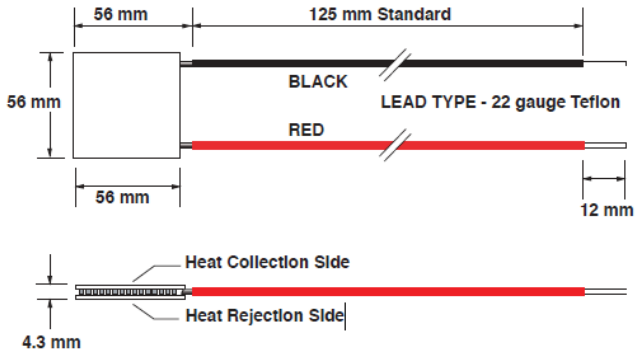

General Generator Details for G2 Module:
Heat source: up to customer
Use: harnessing waste heat and converting it into usable energy
Compatible with: any device as long as customer has way to connect module's wires to device/charger.

Thermoelectric Details:

- Power output: 14.1 watts (at temperature difference of 100 C)
- Voltage: 4.2 V
- Current: 3.4 A
- Resistance: 1.2 ohms
- Thermoelectric material: Bi-Te based
- Ceramic material: Al_2O_3
- Max Operating Temperature: 320 C
- Dimensions: rectangle with 56mm length 56mm width 4.3mmheight
- Price: $110

More information can be found at http://www.tellurex.com/pdf/G2-56-0375-Specifications.pdf

nPower PEG

Mission of Company: Tremont Electric is a personally run company originating from Cleveland, Ohio that created nPower technology, which converts the movements of the body during various physical activities (such as hiking, walking, running, biking, etc…) into usable energy that can charge hand-held devices. Tremont Electric is devoted to their cause of allowing easily accessible clean energy to be available to consumers at an international market, whenever and wherever the consumers will need it.

Various Specifications:

How It Works: The nPower PEG is a passive hybrid kinetic energy generator that can produce energy either from being connected to an energy source through its USB port or through the movement of its wearer during physical activities. It converts the energy produced by movement into usable energy for hand-held devices by a manner that correlates to Faraday's Law of Electromagnetic Induction. As the user engages in physical activity, gravity forces the magnet within the body of the upright charger to move up and down, thus creating an electric current as coils, the conductors, move through the newly created magnetic field.

- Price: $199.95
- Weight: 14 oz.
- Size: 10.5 in long, 1.5 in lying flat, and 2 1/8 in wide
- Operating Temperature: -30 C to 60 C
- Charging Capabilities: 2000 mAh lithium ion polymer battery & maintains charge for 100 days

More details can be found at: http://www.npowerpeg.com/

The Go Mechanical Charger

Mission of Company: Elephant Design wanted to produce a cheap and efficient phone charger that is easily available for the anyone and everyone in this constantly developing world. They wanted to create a simple product that is environmentally friendly and does not rely on any form of outside electricity

Various Specifications:

How It Works: The user turns a hand-powered wheel or rolls the circular wheel on another surface. The turning of the wheel quickly produces a source of energy that simply is derived from the physical energy that is used to turn the wheel.

Price: $8 for charger and $1.50 for adapters

More details can be found at: http://www.geekosystem.com/go-mechanical-charger/

Clarifying the Problem

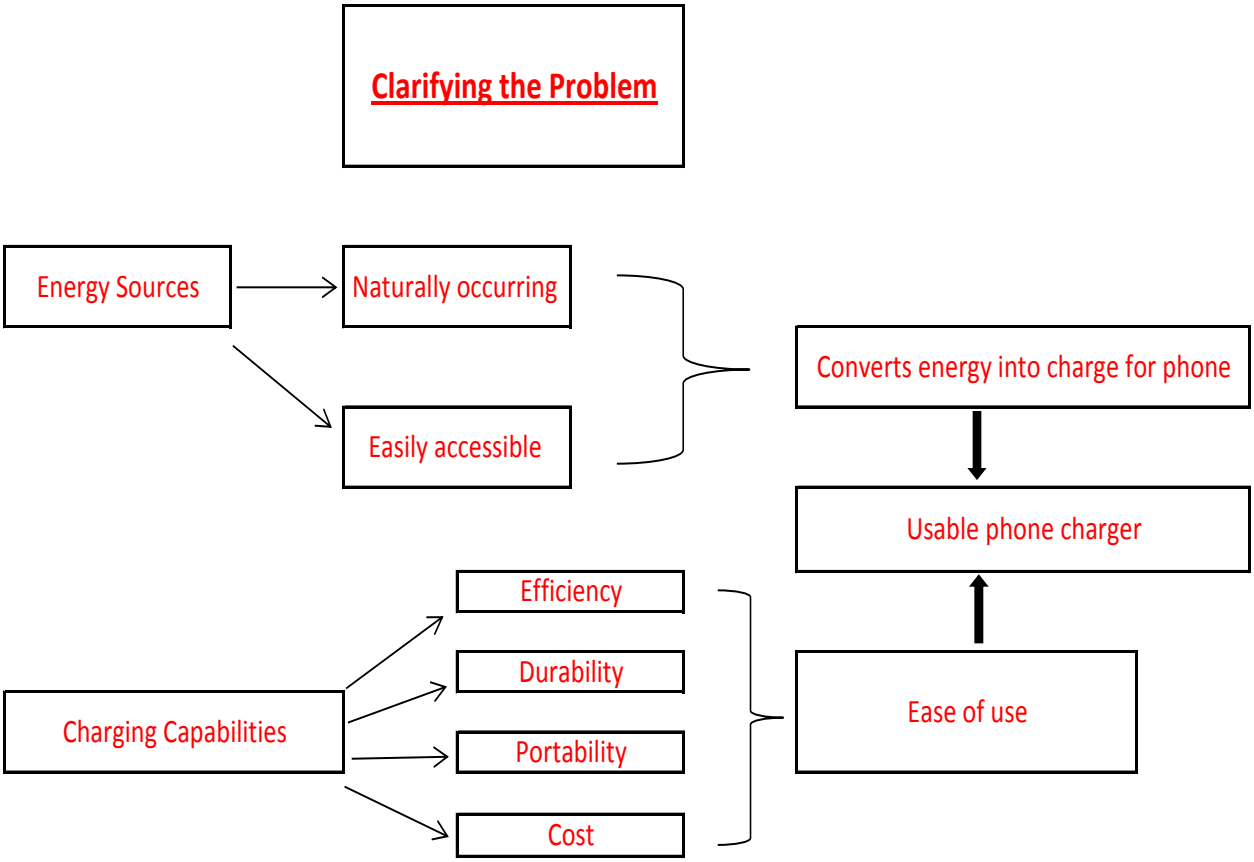

Functional Diagram

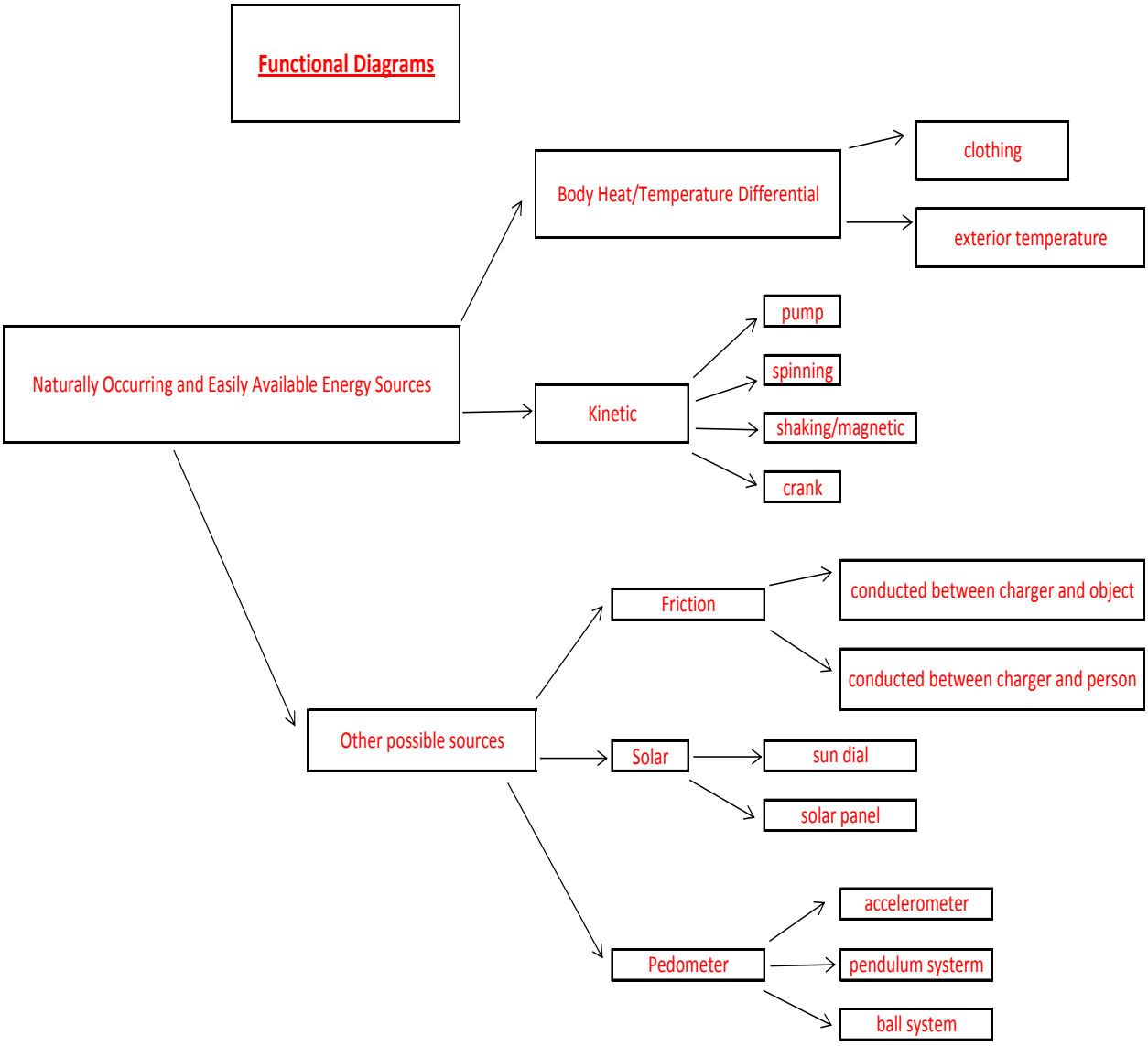

Additional External Research

After clarifying the problem and comparing our ideas to similar products, our group clearly defined what an alternative energy source consists of. Below we give a formal definition of alternative, kinetic, and thermal energy. Additionally, we researched patents on products similar to our ideas. We also did some additional thermo research to help us finalize our design. This additional external research helped us understand the task at hand as well as develop our final specifications.

Literature Review

According to the Atoms for Peace website, renewable energy can be defined as a source of energy or power that has the capacity to replenish itself. Renewable energy is also considered clean energy, because it does not produce toxins or pollutants that are harmful to the environment in the same manner that non-renewable energy does. Thus, renewable energy is also known as green or clean energy. The most commonly used types of renewable energy today are wind power, solar power, and hydroelectric power. Although Atoms for Peace states that wind, solar, and hydroelectric power are the most common sources of energy, our group chose to use kinetic and thermal energy for our product.

Kinetic Energy

The same website defines kinetic energy as energy that moves, or is motion energy. An object that is moving, whether that movement is horizontal or vertical movement, has kinetic energy. When an object has kinetic energy, the elements of the object that are moving are elements within the object such as waves, atoms, electrons, and molecules of that object that are causing it to move. Kinetic energy is useful because the energy of movement in itself can be used. Kinetic energy can be converted into other forms of energy that is useful, such as heat or potential energy. In some cases, kinetic energy can even be converted into light or sound as well.

There are many forms of kinetic energy - vibrational, rotational, and translational:

- ***Vibrational energy*** is the kinetic energy that is caused when an object is vibrating, or experiencing vibrational movement. An example of this would be a cell phone that vibrates. The cell phone will move slightly when accepting a call, and thus the energy created from its vibrations is kinetic vibrational energy.
- ***Kinetic rotational energy*** is energy that is caused when an object is undergoing a rotational motion or movement. The wheel on a moving bicycle for example is kinetic rotational energy. The Earth also as it rotates on its axis is in a constant state of kinetic rotational energy.

- ***Translational kinetic energy*** is the kinetic energy that is most commonly discussed. This is the energy that occurs when an object is moving from one place to another. For example, the football that has just been kicked is translational kinetic energy.

The amount of kinetic energy that a moving object has depends on how heavy the object is and how fast it is moving. The greater the mass of the object and the greater its speed, the more *kinetic energy* it has. In other words, heavier and faster objects will have more kinetic energy than slower objects that are lighter in weight.

Thermal Energy

Additionally, Atoms for Peace defines thermal energy as energy created when the kinetic and potential energy of an object in motion is combined. As the name implies, thermal energy refers to heat that is created through the process of *thermal energy*. Thus, thermal energy can simply be described as a flow of energy, or a means of energy that is moving from one system or state to another. As the energy moves from one state to another, a difference in temperature will occur. This difference in temperature is noted as the thermal energy.

From a physics standpoint, *thermal energy* for an object is calculated by summing the sensible and latent forms of internal energy within an object. Every object on the planet has what is known as internal energy. Internal energy is the sum of all forms of energy within an object. Every object has the following potential properties of internal energy: sensible energy, latent energy, chemical energy, nuclear energy. Sensible energy refers to the portion of energy of an object that is associated with kinetic energy, whereas latent energy refers to the phase of matter of the object such as solid, liquid, or gas. Thus, ***thermal energy*** refers to the combination of sensible and latent energies within an object.

Another example of **thermal energy** lies in the simple calorie. We all know what calories are as we watch them closely when we are on a diet. More calories ingested will ultimately result in weight gain, and thus, calories are a form of energy in themselves. Thermal energy is used to calculate the caloric content of a food item. The amount of energy that is required to raise the temperature of one gram of the food item by one degree is referred to as the caloric content that is calculated through **thermal energy**. The more thermal energy that is required to raise the temperature of one gram of food, the more calories that food item will have.[7]

For additional information on these forms of energy and many other types of alternative energy check out http://www.ifpaenergyconference.com/.

---

[7] http://www.ifpaenergyconference.com/.

Additional Thermo Research

As previously stated, thermoelectric generators (TEGs) work by taking advantage of the temperature difference between two surfaces that it comes in contact with. This temperature difference induces a flow of electrons and is directly proportional to the amount of current flow.

Most TEGs use bismuth telluride or lead telluride based materials, although current research in the field is showing that a zinc-antimony compound could also be a new contender in the thermoelectric world. ß-Zn4Sb3 is a semiconductor compound that has a low thermal conductivity, is relatively stable and inexpensive. Another new development being improved is different thermoelectric module shapes. This research and development is allowing for thermoelectric plates and generators, which are usually flat and plate-like, to have curves or irregular shapes. This is useful for when heat flows from a source in radial directions instead of in linear, parallel directions. This research and development is especially helpful for our group because our heat source is a human arm which is round and emits heat radially. A curved thermoelectric module design will allow us to capture more body heat and make a more efficient charger.

One of the leading TEG companies in the world, Tellurex, currently manufactures TEGs and emergency power supply solutions that run off different sources such as Sterno canned fuel, camp and kitchen stoves, and battery powered tea lights. They also produce seven different power generation modules, the dual-plate type mechanisms we experimented with in class. These TEGs can produce anywhere from 2 to 14 watts at a temperature difference of 100 C, which means the high output models could produce about 3 to 5 watts if they were used in our hiking scenario where the ideal temperature difference between body heat and outdoor temperature is 20-30 C. This information is beneficial when designing an alternative energy powered phone charger because we need to produce 7.5 watt-hours to fully charge the phone.[8]

[8] http://www.benthamscience.com/eeng/samples/eeng2-1/0004EENG.pdf
www.tetech.com
www.tellurex.com

Patent Research

Kinetic Energy Charger

"Kinetic energy system and apparatus for charging portable batteries"

Created by: Alexander Benjamin Biamonte

Patent Number: 7327046

Issued: February 5, 2008

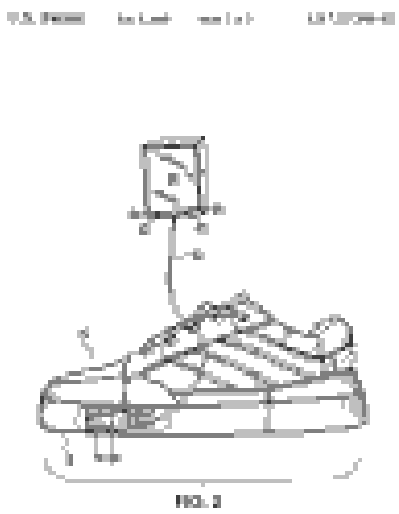

Description: "An article of human clothing customarily worn on a body part of a human wearer that is characterized by repetitive fore-and-aft motion substantially parallel to a given locomotion axis during ordinary locomotion activity of said wearer"

- which also contains an linear electrical generator connecting to a rechargeable battery[9]

[9] http://www.google.com/patents/US7327046?dq=kinetic+energy+charger&hl=en&sa=X&ei=f3e2UKDZBqWH0QGF3YHABQ&ved=0CEAQ6AEwBA

Thermoelectric Generator

"Electronic device featuring thermoelectric power generation"

Created by: Jean-Pierre Fleurial, N. Thomas Olson, Alexander Borshchevsky, Thierry Caillat, Elizabeth Kolawa, M. Amy Ryan, Wayne M. Philips

Patent Number: 6288321

Issued: September 11, 2001

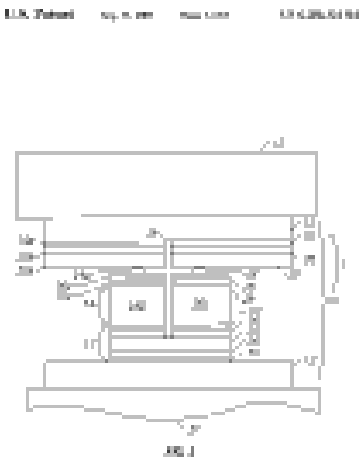

This thermoelectric module is used to generate voltage and power outputs. It contains a heat-conducting side that comes into contact with a high-temperature region. A low-temperature region is located on the side directly opposite of the high-temperature region. The flow of heat from the high-temperature region into the heat conducting substance creates a thermal gradient with the low-temperature region that generates electrical power.[10]

[10] http://www.google.com/patents/US6288321?dq=tellurex+thermoelectric+generator&ei=lbaUJuaNvHp0QGAnYHAAQ

Concept Screening

After the entire class brainstormed the following alternative energy sources, our team went through and decided which sources we wanted to further consider. We chose to research the sources we believed would be the most readily available in an outdoor environment.

Concept Screening	
Energy Source	**Pursue Further Research?**
Solar	x
Wind	
Nuclear	
Hydro	
Mechanical	x
Water	
Geo thermal	x
Sound	
Shaking	x
Piezo Elec.	
Elec. Magnetic Wave	
Magnets	
Nano Biology	
chemical	
Heat	x
Hydro	
Biomass	
Friction	x
Gravity	x
Human Labor	x
Natural gas	
Radiation	
Volcanos	
coal	
Gerbil/Wheel	
Body heat	x
Shoe batteries	x
Hat with propeller	
Pressure plates	x
Atmospheric pressure	x
Tidal	
Foot pump	x

Lightning	
Tornados	
Brain waves	
Breath generator	x
Rainbow	
Ocean waves	
Arc reactor	
Stampede	
Fruit batteries	
Biomass	
Walking	x
Bike	
Rainbow	
Static elec.	x
Earthquake	
Screaming	
Boomerang	
Capacitors	
Heart beat	x
Stationary bike	
ATP	
Potato	
Spinning	
Feces	
Flatulence	
Elec. Eels	
Shivering	
Homeo stasis	
Combustion	
Lights	
Lightning bugs	
Sublimation	
Ocean tides'	
EMI	
Whirlpool	
Earth's rotation	
Phases of the moon	
Oxidation	
Oscillation	
Moonbow	
Vibration	x

Collision	x
Battery Li/ion	
Splitting and atom	

Concept Scoring

From all of the possible sources of energy we selected in the previous section, we decided to narrow down our choices even further. We then compared these alternative energy sources to one another based on a variety of criteria. This step in our design process helped us to finalize which two energy sources we wanted to use for our final design.

Selection Matrix - Concept Scoring					
Selection Criteria	**Friction**	**Pedometer**	**Solar**	**Kinetic/Mechanical**	**Body Heat/Temperature Difference**
Available in hiking scenario	+	-	0	+	0
Durable	0	+	-	+	+
Waterproof	-	0	-	+	+
Portable	+	+	0	+	0
Weight	0	+	-	+	-
Ease of Use	-	0	+	0	+
Energy Output (5V+)	0	-	+	+	+
Economically Viable	0	+	0	-	+
Net Score	0	2	-1	5	4
Rank	4	3	5	1	2
Continue?	**no**	**no**	**no**	**yes**	**yes**

Field Testing

Group 5 conducted testing on a cell phone to figure out how much energy and time is needed to fully charge a phone. The two charts below summarize the results. From these results and additional research, Group 5 has determined that 7.5 watts are needed to fully charge a Smartphone.

Volt-Amp Meter		
10 Minute Intervals	Current (Amps)	Volts
0	0.589	5.1
10	0.577	5.1
20	0.442	5.09
30	0.33	5.07
40	0.247	5.06
50	0.192	5.06
60	0.153	5.06
70	0.126	5.05
80	0	5.05
90	0	5.05
100	0	5.05

10 Minute Intervals	Current (Amps)	Volts	Watts	Hz.	Power Factor	VA
0	0.07	121.6	4	59.9	0.54	6
10	0.05	122.3	4	59.9	0.51	6
20	0.05	122.2	3	59.9	0.5	6
30	0.05	122	2	59.9	0.48	6
40	0.04	121.7	2	59.9	0.42	5
50	0.04	121.9	2	59.9	0.4	5
60	0.04	122	1	59.9	0.34	5
70	0.04	122.2	1	59.9	0.32	5
80	0.04	122.3	1	59.9	0.21	5
90	0.04	121.9	1	59.9	0.2	5
100	0.04	121.9	1	59.9	0.2	5

Our group also experimented with a thermoelectric generator, measuring the wattage produced. The table and graph below summarize the results. As a result of conducting the experiment, we were able to obtain an equation to determine the amount of wattage produced based off of temperature difference.

change in temperature	mW	time (s)
8.6	46	10
12.2	520	30
14	1380	50
15	1944	60
16.1	2332	70
17.7	2838	120
16.8	2906	130

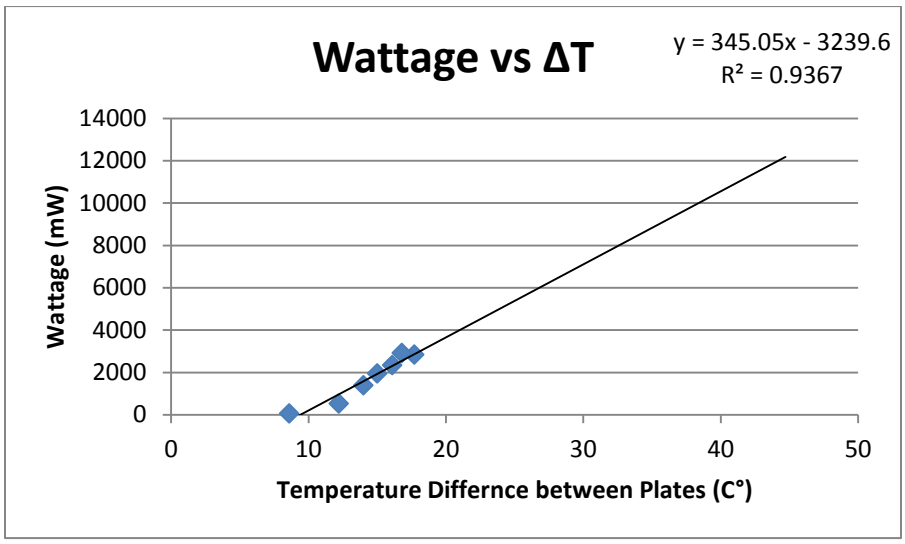

Our team also used the following chart to develop our final design. The chart shows how much wattage is produced at certain temperatures. It also includes the amount of time it will take to reach each wattage output. On the next page there is a conversion chart between C°, F°, and K° (Kelvin).

Sample Charging Times				
Body Temp (C°)	**Outside Temp (C°)**	Temp Diff (C°)	Watt Output	**Time to Charge (minutes)**
37	**5**	32	7.802	**57.7**
37	**7**	30	7.1119	**63.3**
37	**10**	27	6.07675	**74.1**
37	**13**	24	5.0416	**89.3**
37	**15**	22	4.3515	**103.4**
37	**18**	19	3.31635	**135.7**
37	**21**	16	2.2812	**197.3**
37	**24**	13	1.24605	**361.1**
37	**27**	10	0.2109	**2133.7**
37	**29**	8	0	**0.0**
37	**32**	5	0	**0.0**
37	**35**	2	0	**0.0**

Temperature Conversion Chart

°C	°F[1]	°K
- 40	- 40.0	233
- 39	- 38.0	234
- 38	- 36.5	235
- 37	- 34.5	236
- 36	- 33.0	237
- 35	- 31.0	238
- 34	- 29.0	239
- 33	- 27.5	240
- 32	- 25.5	241
- 31	- 24.0	242
- 30	- 22.0	243
- 29	- 20.0	244
- 28	- 18.5	245
- 27	- 16.5	246
- 26	- 15.0	247
- 25	- 13.0	248
- 24	- 11.0	249
- 23	- 09.5	250
- 22	- 07.5	251
- 21	- 06.0	252
- 20	- 04.0	253
- 19	- 02.0	254
- 18	- 00.5	255
- 17	+01.5	256
- 16	+03.0	257
- 15	+05.0	258
- 14	+07.0	259
- 13	+08.5	260
- 12	+10.5	261
- 11	+12.0	262
- 10	+14.0	263
- 09	+16.0	264
- 08	+17.5	265
- 07	+19.5	266
- 06	+21.0	267
- 05	+23.0	268
- 04	+25.0	269
- 03	+26.5	270
- 02	+28.5	271
- 01	+30.5	272
00	+32.0	273
+01	+33.5	274
+02	+35.5	275
+03	+37.5	276
+04	+39.5	277
+05	+41.0	278
+06	+43.0	279
+07	+44.5	280
+08	+46.5	281
+09	+48.0	282

°C	°F[1]	°K
+10	+50.0	283
+11	+52.0	284
+12	+53.5	285
+13	+55.5	286
+14	+57.0	287
+15	+59.0	288
+16	+61.0	289
+17	+62.5	290
+18	+64.5	291
+19	+66.0	292
+20	+68.0	293
+21	+70.0	294
+22	+71.5	295
+23	+73.5	296
+24	+75.0	297
+25	+77.0	298
+26	+79.0	299
+27	+80.5	300
+28	+82.0	301
+29	+84.0	302
+30	+86.0	303
+31	+88.0	304
+32	+89.5	305
+33	+91.5	306
+34	+93.0	307
+35	+95.0	308
+36	+96.5	309
+37	+98.0	310
+38	+100.5	311
+39	+102.0	312
+40	+104.0	313
+41	+106.0	314
+42	+107.5	315
+43	+109.5	316
+44	+111.0	317
+45	+113.0	318
+46	+115.0	319
+47	+116.5	320
+48	+118.5	321
+49	+120.0	322
+50	+122.0	323
+51	+124.0	324
+52	+125.5	325
+53	+127.5	326
+54	+129.0	327
+55	+131.0	328
+56	+133.0	329
+57	+134.5	330
+58	+136.5	331
+59	+138.0	332
+60	+140.0	333

Final Specifications

After brainstorming multiple ideas and completing a significant amount of research, our team developed the final design for our project. Several criteria became the main concern for our project. In order to please the customer, we took into consideration cost, efficiency, durability, portability, size, and several other factors. Also, the final product needed to produce enough energy to fully charge a Smartphone. We developed our final specifications and dimensions. We also created a catchy name and phrase for our product. Our alternative energy charger, **The Journey Generator**, will surely stand-alone against its competitors.

The Journey Generator

"It Stands Alone"

Alternative Energy Sources: Kinetic/ Thermoelectric
Material: Nylon/Neoprene

Length: 6.2 inches
Weight: About 1 lb.
Wattage Produced:

- Kinetic: 2.5 watts/hr
- Thermal:5 watts/hr

Estimated Cost: ~ $160

How it Works

The Journey Generator produces energy through two separate chargers that rely on readily available energy sources, the kinetic charger and the thermoelectric charger.

The kinetic charger converts the energy produced by the physical movements of its user into electricity, which can be used to charge a Smartphone through its USB adaptor. As the user of **The Journey Generator** walks, runs, bikes, or partakes in any form of physical activity, a magnet lying inside a series of coils within the charger moves up and down with the user's body, thus producing a magnetic field that is then transferred into a usable form of electricity to power your phone.

With a flick of a switch**, The Journey Generator** can change its source of power from its kinetic charger to its thermoelectric charger. This charger relies on the difference of temperature between two surfaces which it shares contact. One side of the charger will be against the users arm, taking in their body heat, while the other will be facing the external environment, thus inducing a flow of electrons between the temperature difference that will be converted into electricity for use by the user's phone.

Dimensions

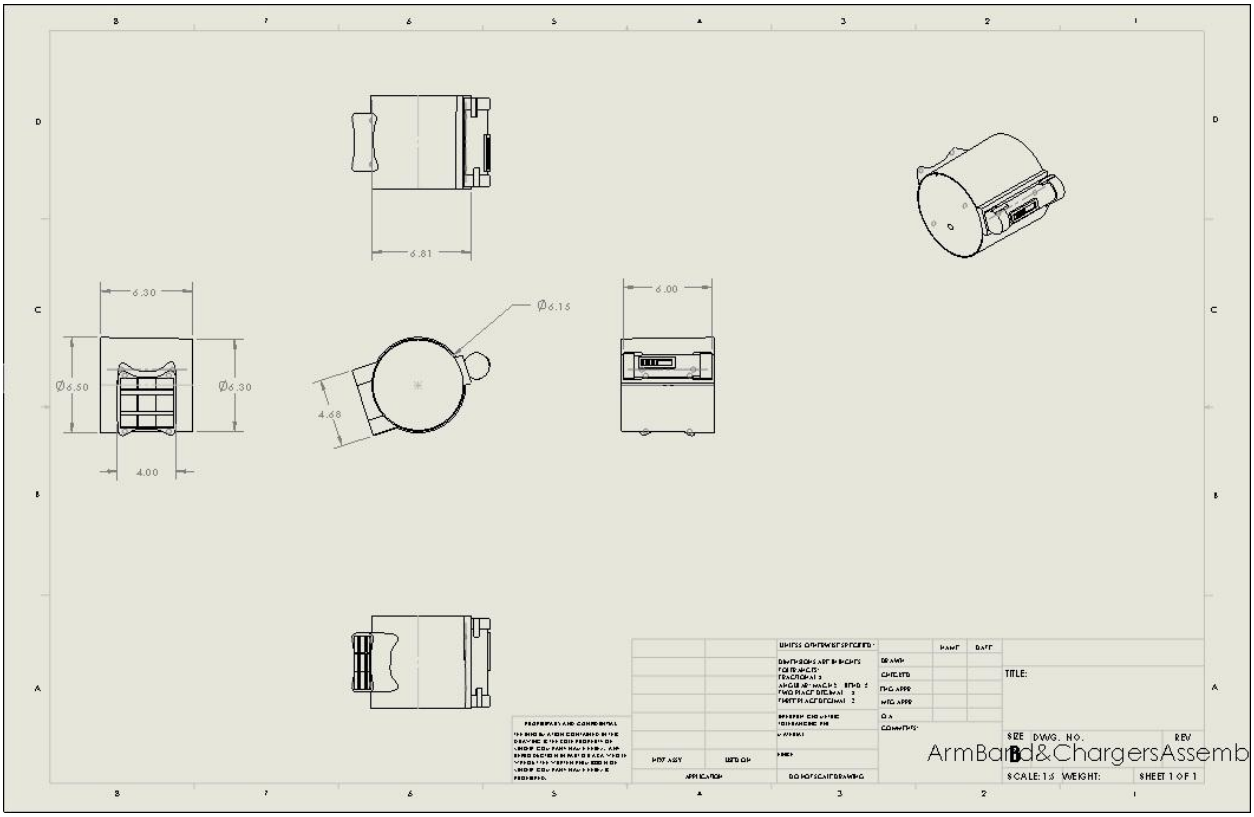
6.81
6.30
Ø6.50
Ø6.30
4.00
Ø6.15
4.68
6.00
TITLE:
SIZE
DWG. NO.
REV
B
SCALE: 1:5
WEIGHT:
SHEET 1 OF 1
ArmBand&ChargersAssemb

Projected Cost

Predicted Cost Model

one size fits all, cell phone not included

General	
Kinetic Energy Charger	$100
Thermoelectric Generator (3 small, wires included)	$54
USB Cord	$2
Nylon/Neoprene Armband Material	$5

Total Estimated Cost: < $200

11

[11] http://www.ebay.com/sch/i.html?_nkw=usb+cords
http://store.npowerpeg.com/nPower-Personal-Energy-Generator-devices/dp/B004T3OFQ4
http://www.monoprice.com/products/product.asp?c_id=108&cp_id=11213&cs_id=1083111&p_id=9228&format=2
http://tegpower.com/pro4.html

Final Design

Below, pictures of The Journey Generator are included. Our group decided to create a Solid Works model, a brochure, and a poster to communicate our idea to our customer. We have included several different views of our model, along with pictures of several of the individual parts. We also made sure to make a dimensioned drawing of our final design as well.

Multiple Views

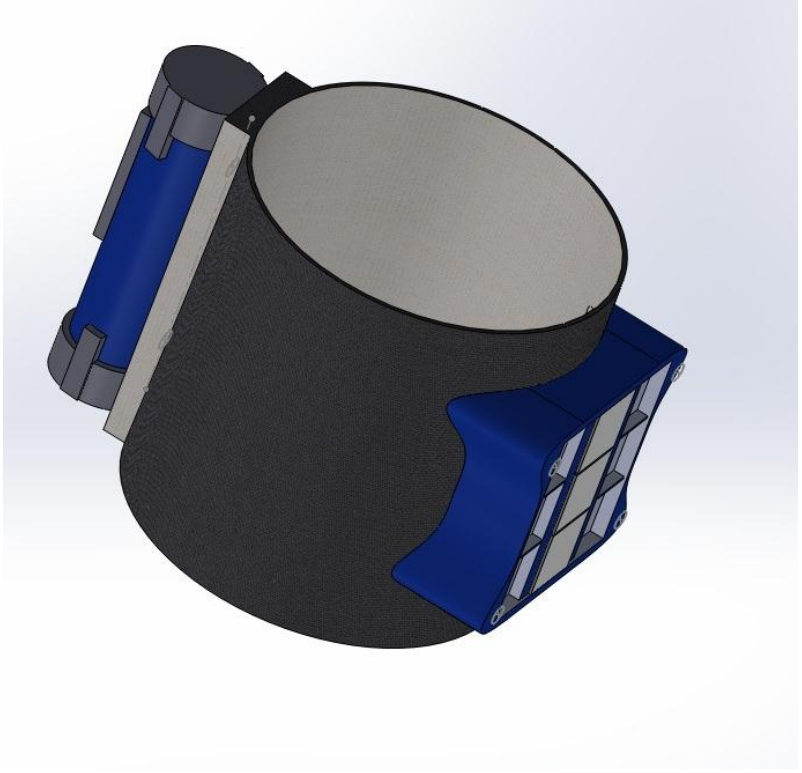

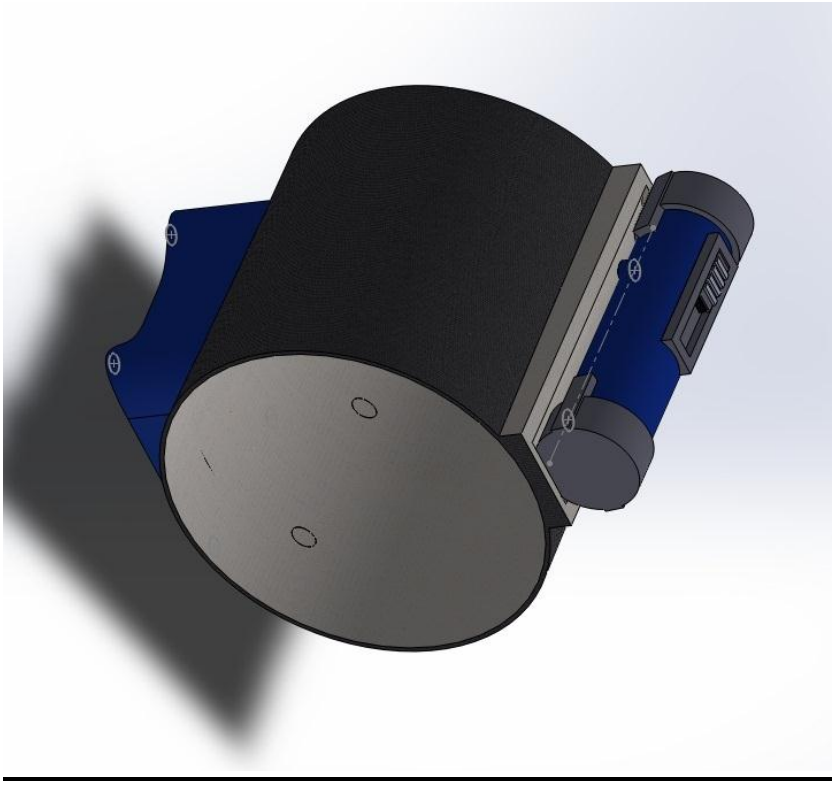

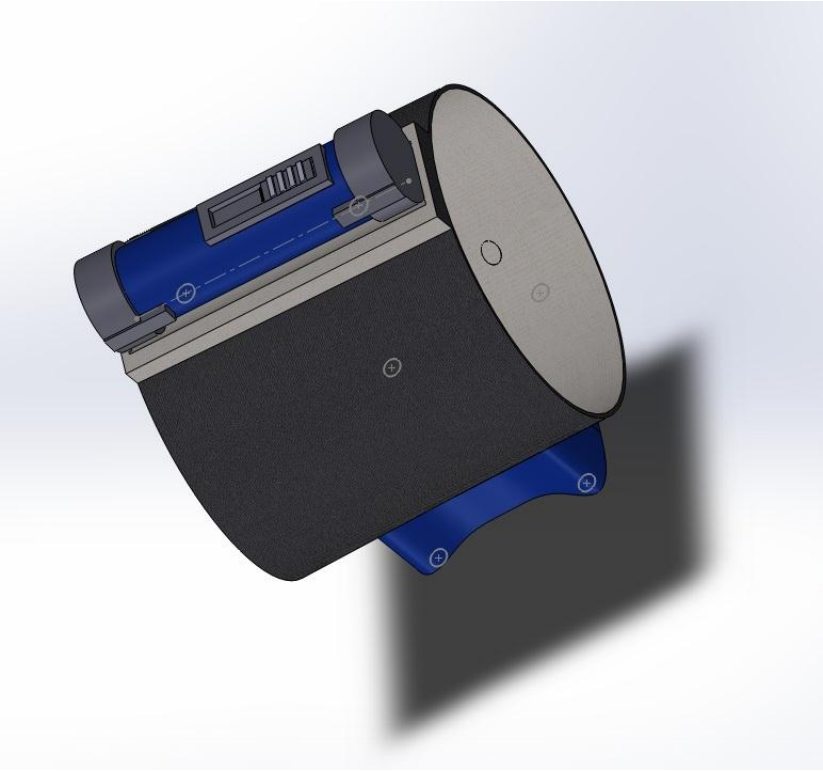

Separate Parts

Kinetic Charger

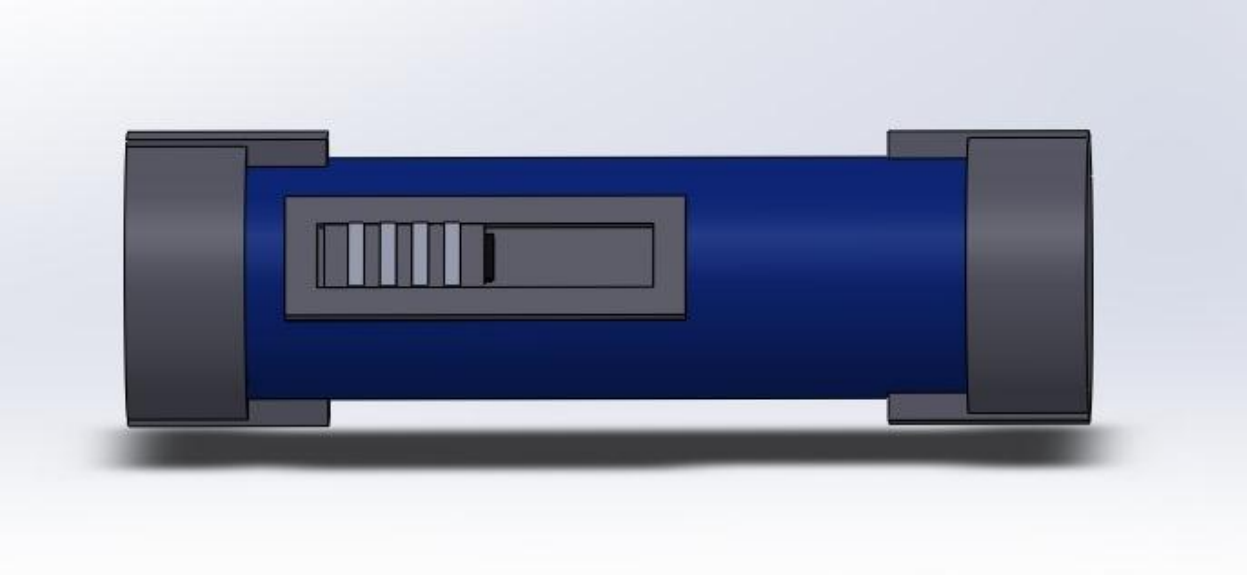

Thermoelectric Charger

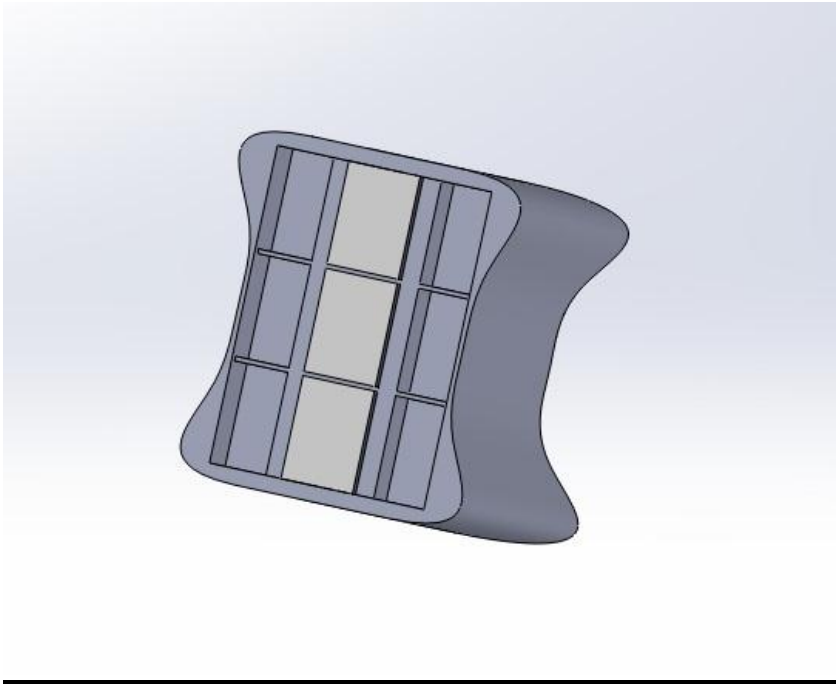

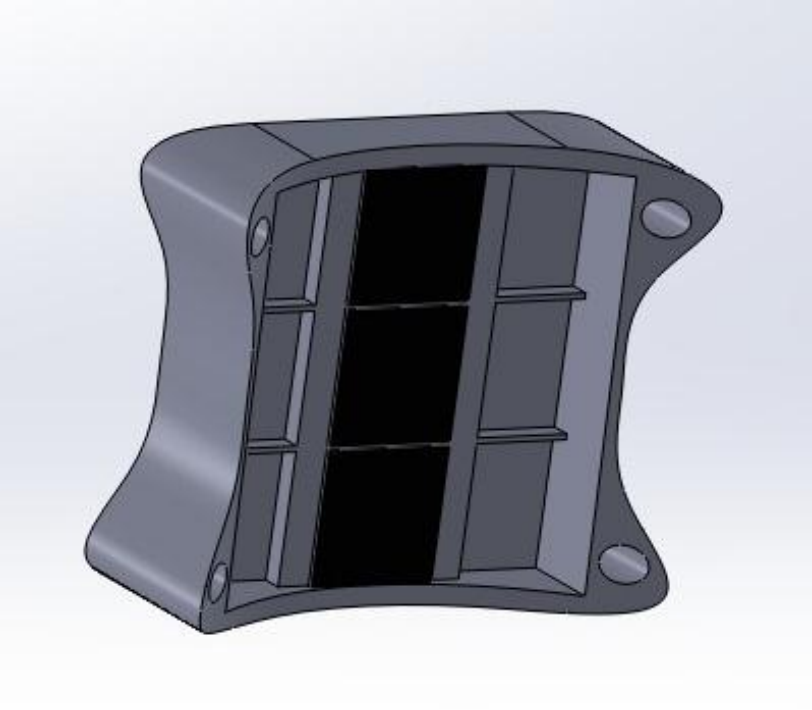

Poster

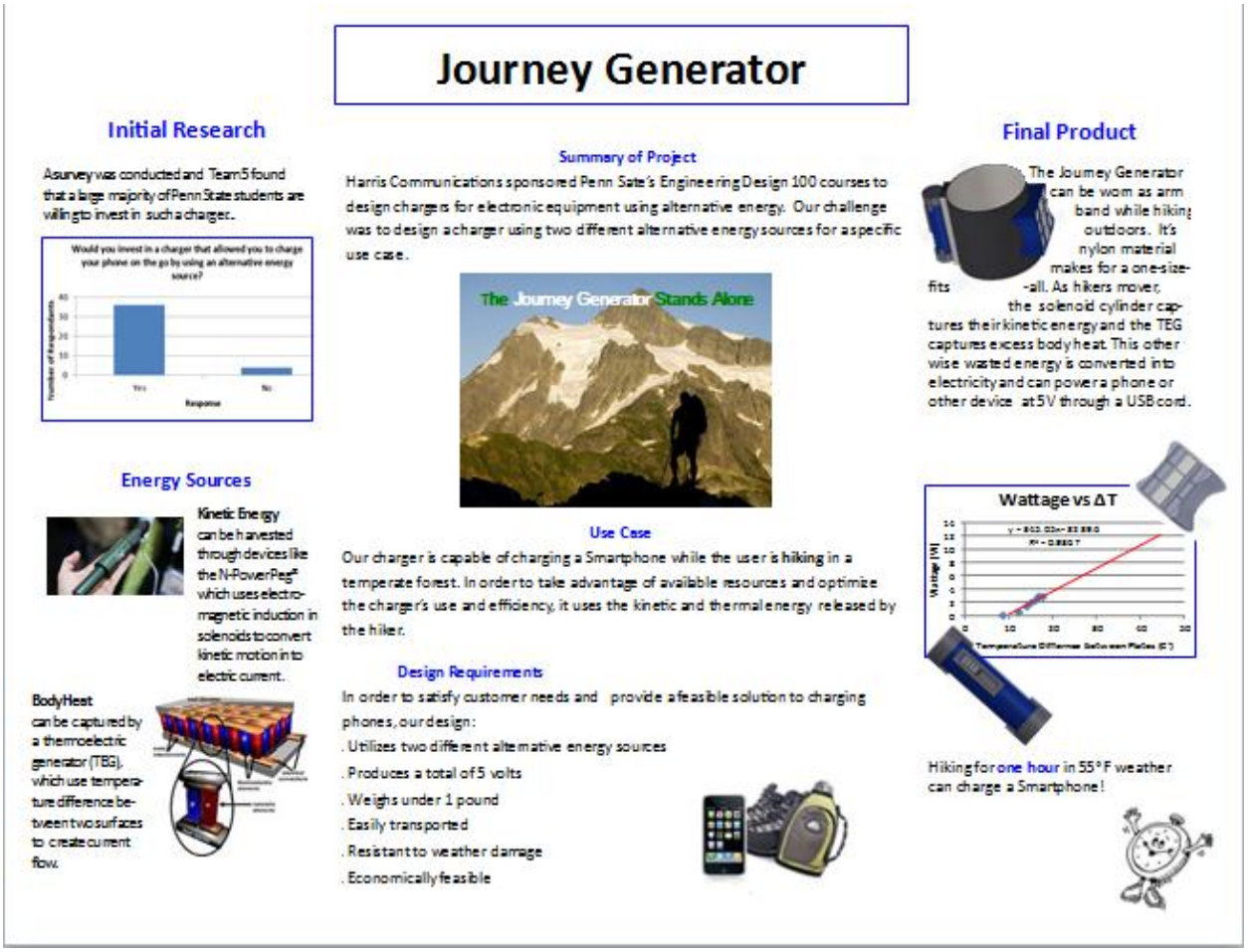
Journey Generator
Initial Research
A survey was conducted and Team 5 found that a large majority of Penn State students are willing to invest in such a charger.
Would you invest in a charger that allowed you to charge your phone on the go by using an alternative energy source?
Number of Respondents
Yes
No
Response
Energy Sources
Kinetic Energy can be harvested through devices like the N-PowerPeg® which uses electro-magnetic induction in solenoids to convert kinetic motion into electric current.
BodyHeat can be captured by a thermoelectric generator (TEG), which use tempera-ture difference be-tween two surfaces to create current flow.
Summary of Project
Harris Communications sponsored Penn Sate's Engineering Design 100 courses to design chargers for electronic equipment using alternative energy. Our challenge was to design a charger using two different alternative energy sources for a specific use case.
The Journey Generator Stands Alone
Use Case
Our charger is capable of charging a Smartphone while the user is hiking in a temperate forest. In order to take advantage of available resources and optimize the charger's use and efficiency, it uses the kinetic and thermal energy released by the hiker.
Design Requirements
In order to satisfy customer needs and provide a feasible solution to charging phones, our design:
. Utilizes two different alternative energy sources
. Produces a total of 5 volts
. Weighs under 1 pound
. Easily transported
. Resistant to weather damage
. Economically feasible
Final Product
The Journey Generator can be worn as arm band while hiking outdoors. It's nylon material makes for a one-size-fits -all. As hikers move, the solenoid cylinder cap-tures their kinetic energy and the TEG captures excess body heat. This other wise wasted energy is converted into electricity and can power a phone or other device at 5V through a USB cord.
Wattage vs ΔT
Wattage [W]
Temperature Difference Between Plates (C°)
Hiking for one hour in 55°F weather can charge a Smartphone!

Brochure- Front and Back

ADDRESSING THE CONSUMER

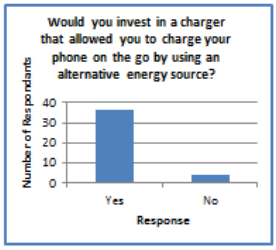

A survey regarding phone usage was administered to forty Penn State students. The graph above shows the results of how many students would invest in an environmentally friendly charger. This clearly illustrates a need in a small scale of the need for phone chargers utilizing alternative energy in today's society.

As a result, we decided upon utilizing kinetic and thermoelectric energy as The Journey Generator's power sources, thus relying on two energy sources that are easily available in everyday life.

FINAL PRODUCT

Material: Nylon/Neoprene
Length: 6.2 inches
Weight: About 1 lb.
Wattage Produced:
- Kinetic: 2.5 watts/hr
- Thermal:5 watts/hr

Estimated Cost: ~ $160

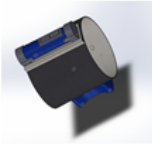

One Size- Fits Most

THE JOURNEY GENERATOR

Team 5- Team No Name
Chris Chesko cwc5426@psu.edu
Rachel Perini rqp5167@psu.edu
Elaina Ripepi ezr5050@psu.edu
Kayleigh Tinjar kat5320@psu.edu

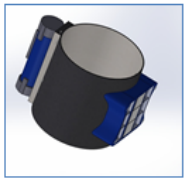

The Journey Generator Stands Alone

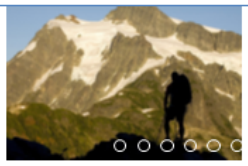

OUR MISSION

As students in the College of Engineering at the Pennsylvania State University, Harris has challenged us to create a charging system that uses at least two alternative energy sources. Our mission was to design a cell-phone charger for a specific "use case." The product was required to be economically and environmentally friendly. Additionally, our group wanted to meet our customer's needs, making our charger safe, light weight, and portable. Most importantly, our group took the initiative to meet the expectations of Harris as a leading global communications supplier.

SITUATION

Our group chose hiking in a temperate forest to be our use case. Our charger is optimally designed for such a situation. With such a large difference of temperature between the customer's body heat and the external environment, our group decided a thermoelectric charger would be effective. Additionally, we concluded using the natural movement of one's body when hiking would be advantageous. Our product uses this kinetic movement as our second form of alternative energy for use in this situation.

PENNSTATE

HOW IT WORKS

The Journey Generator produces energy through two separate chargers that rely on readily available energy sources, the kinetic charger and the thermoelectric charger.

The kinetic charger converts the energy produced by the physical movements of its user into electricity, which can be used to charge a Smartphone through its USB adaptor. As the user of **The Journey Generator** walks, runs, bikes, or partakes in any form of physical activity, a magnet lying inside a series of coils within the charger moves up and down with the user's body, thus producing a magnetic field that is then transferred into a usable form of electricity to power your phone.

With a flick of a switch, **The Journey Generator** can change its source of power from its kinetic charger to its thermoelectric charger. This charger relies on the difference of temperature between two surfaces which it shares contact. One side of the charger will be against the users arm, taking in their body heat, while the other will be facing the external environment, thus inducing a flow of electrons between the temperature difference that will be converted into electricity for use by the user's phone.

Similar Products & Further Research

Npower PEG

- Price: $199.95
- Weight: 14 oz.
- Size: 10.5 in long, 1.5 in lying flat, and 2 1/8 in wide
- Operating Temperature: -30 C to 60 C
- Charging Capabilities: 2000 mAh lithium ion polymer battery & maintains charge for 100 days

tPOD5

- Power connection: USB cord
- Power output: 5 watts (steady after a five-minute heat load)
- Weight: 1.3 kg
- Dimensions: cylinder with 3in diameter and 3in height
- Price: $139

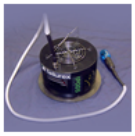

Conclusion

Careful planning and organization have allowed our team to successfully finish designing our mobile electronics alternate charging system. After much deliberation and research on the types of alternate energy to use, the design of the charger, and the use-case scenario, we finally chose the details in which we felt would make the best all-around charger. The same team-building skills mastered during the first project were utilized throughout this entire project and therefore allowed us to finish it even more efficiently. Communication played another very important role, as it allowed our team to effectively delegate tasks and make sure every member was playing his or her part in completing the project. As a team, we have come together very well and have learned each other's strengths and weaknesses, also allowing us to complete the project in the most efficient way possible. In conclusion, our research and team creativity enabled us to design a professional-looking product that could be marketed and sold in stores today.

Sources

Alternative Energy Research

Existing Solar Phone Chargers:

1.http://illminatus.hubpages.com/hub/How-does-a-Solar-Power-Cell-phone-work-Your-guide-to-the-top-5-Solar-Cell-phone-Chargers-on-the-market

2.http://electronics.howstuffworks.com/gadgets/travel/solar-battery-chargers1.htm

3.http://store.solio.com/Solio-Store/Solio-Bolt-Solar-Charger-S620-AH1RW

Triboelectric Generator:

4.http://www.newswise.com/articles/triboelectric-generator-captures-power-from-friction

Pedometer:

5.http://www.bodytronics.com/page/bodytronics/PEDOMETERSHOWWORK

6.http://www.wisegeek.com/how-does-a-pedometer-work.htm

Existing Kinetic Phone Chargers:

7.http://www.npowerpeg.com/

8.http://www.gizmag.com/the-etive-kinetic-energy-charger-gives-power-walking-a-whole-new-meaning/11750/

Thermoelectric Generator:

9.www.howstuffworks.com

10.www.archiv.fraunhofer.de/archiv

11.www.gizmag.com

12.www.sciencedaily.com

13.www.its.org

Cell Phone Charger:

14.http://techtips.salon.com/cell-phone-charger-works-4515.html

Additional Research

15. ***Literature Review:***

http://www.ifpaenergyconference.com/

Patent Research:

16.http://www.google.com/patents/US7327046?dq=kinetic+energy+charger&hl=en&sa=X&ei=f3e2UKDZBqWH0QGF3YHABQ&ved=0CEAQ6AEwBA

17.http://www.google.com/patents/US6288321?dq=tellurex+thermoelectric+generator&ei=lba_UJuaNvHp0QGAnYHAAQ

Additional Thermo Research:

18.http://www.benthamscience.com/eeng/samples/eeng2-1/0004EENG.pdf

19.www.tetech.com

20. www.tellurex.com

Predicted Cost Model

21.http://www.ebay.com/sch/i.html?_nkw=usb+cords
22.http://store.npowerpeg.com/nPower-Personal-Energy-Generator-devices/dp/B004T3OFQ4
23.http://www.monoprice.com/products/product.asp?c_id=108&cp_id=11213&cs_id=1083111&p_id=9228&format=2
24.http://tegpower.com/pro4.html