The Pennsylvania State University Hydro-Powered Generator

Sponsored by: Siemens Incorporated

Report Website:

(http://personal.psu.edu/rmr5383/section16_team5_sp2013_edsgn100.pdf)

EDSGN 100

Section 16

Team Number 5

Submitted by: Ian Nguyen, Qianrui Qi, Ronnie Ryder, and Nick Samardzija

Submitted to: Xinli Wu

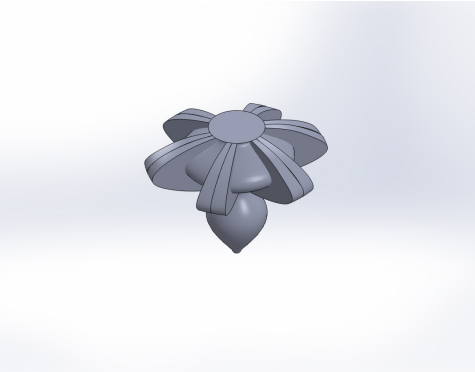

Table of Contents:

Abstract…….Page 3 (Ronnie Ryder)

Introduction……..…Page 3 (Ronnie Ryder)

Description of Design Task……..Page 4 (Ronnie Ryder)

Concept Generation……..Page 4 (Ronnie Ryder)

Design Matrices……..Page 6(Nick Samardzija)

Trade Studies……....Page 7 (Ronnie Ryder)

Description of Selected Design….Page 7 (Ronnie Ryder)

SolidWorks Modeling……Page 8,9,10,11 (Ian Nguyen)

Prototype Images……..Page 12 (Nick Samardzija)

Working Mechanism……..……Page 13 (Ronnie Ryder)

Design Features……Page 14 (Ronnie Ryder)

Concept Generation……...……Page 15 (Ronnie Ryder)

Engineering Analysis……..…..Page 15 (Ronnie Ryder)

Cost Analysis……...……..Page 16 (Ronnie Ryder

Summary……...……..Page 17 (Ronnie Ryder)

Abstract:

The design team was asked to research sustainable cities and develop an idea that could directly improve Penn State's overall sustainability as a small city. The options were unlimited, varying from large-scale projects affecting the entire campus to smaller projects that may only affect one building or area of campus. After extensive research into several areas of sustainability the design team came up with a plan to use water and the force of gravity to produce energy in coordination with Penn State University's inclined landscape. Included in this report you will find detailed documentation of the design process, analysis of the Hydro-Powered Generator (including cost analysis) and pictures of the prototype.

Introduction:

With energy costs in the United States at an all time high and the economy at a relatively stagnant low point, energy efficiency is becoming a focal point in engineering nationwide as well as in individual homes. The design team's goal from the beginning of the design process was to design a product or implement an idea that could not only save money but reduce overall energy usage in the small city of State College, Pennsylvania. Through research and brainstorming the design team was able to come up with several ideas regarding energy efficiency/production and after researching the practicality of our array of ideas, chose to design a hydro-powered generator that harnessed Penn State's unique landscape of hills and used it to the campus' advantage, specifically in electricity usage.

Description of Design Task:

- Problem Statement: Penn State University, with over 40,000 students and hundreds of businesses, uses a large amount of electricity each and every day to support daily campus activities and necessities. The design team brainstormed and researched a wide array of technologies capable of reducing Penn State's total electricity costs and decided the use of hydropower best fit Penn State University.

- Mission Statement: Hydropower is becoming an important resource in "recycled" energy, and the money put into building hydropower facilities is reciprocated after a short period of time. Considering the landscape surrounding Penn State is generally mountainous and Penn State is the "Happy Valley", most water from surrounding mountainous areas converges at the Penn State University Park campus, especially during rainstorms and in early Spring when all the winter precipitation melts off. Penn State residential facilities use large amounts of grey water, which can also be used to power a hydro-powered generator.

	Week 1	Week 2	Week 3	Week 4	Week 5	Week 6	Week 7
Research							
Brainstorming							
Design Matrix							
Working Drawings							
Prototype Building							
Testing							
Lab Report							
Presentation							

Table 1. Gantt Chart

Concept Generation:

Five of the design team's design ideas are listed below

1) Hydro-powered generator- using Penn State University's inclined landscape to create electricity from water runoff
2) Grey Water System- recycling shower and sink water into usable places such as toilets and watering plants with minimal filtration
3) Geothermal Heating- using the Earth's natural core temperature (50 degrees) to heat/cool buildings by allowing heaters/air conditioners to use less energy
4) Floor Energy Converter- converting energy from people's walking (friction) into usable energy throughout buildings with the use of energy absorbing floor panels
5) Underground Train-A fully electric underground shuttling system that diminishes emissions from current Penn State public transportation (CATA buses)

Design Matrices:

Selection Criteria	Concepts				
	Hydro-Powered Generator	Grey Water System	Geothermal Heating	Floor Energy Converter	Underground Train
Efficiency	+	+	+	0	+
Durability	0	-	0	+	+
Production Cost	0	+	-	+	-
Maintenance	0	+	-	0	-
Reliability	+	0	+	0	+
Manual Labor for Production	+	+	-	0	-
Size	+	+	-	+	-
Sum of +'s	4	5	2	3	3
Sum of 0's	3	1	1	4	1
Sum of -'s	0	1	4	0	4
Net Score	4	4	-2	3	-1
Rank	1	2	4	3	4
Continue?	Yes	Revise	No	No	No

Table 2. Design Matrix 1

Selection Criteria		Hydro-Powered Generator		Grey Water System		Floor Energy Converter	
	Weight	Rating	Weight	Rating	Weight	Rating	Weight
Efficiency	30%	4	1.2	4	1.2	2	0.6
Durability	15%	4	0.6	2	0.3	3	0.45
Production Cost	10%	3	0.3	5	0.5	3	0.3
Maintenance	10%	3	0.3	4	0.4	3	0.3
Reliability	10%	4	0.4	3	0.3	3	0.3
Manual Labor for Production	15%	4	0.6	3	0.45	4	0.6
Size	10%	4	0.4	5	0.5	4	0.4
Total Score		3.8		3.65		2.95	
Rank		1		2		3	
Continue?		Yes		No		No	

Table 3. Design Matrix 2

Trade Studies:

When the design team made the decision to design a gravity powered hydro-generator there were multiple options for how to implement such an idea. The design team could have let the water continuously run to the turbine, or the water could build up in a storage tank prior to release. There are advantages and disadvantages to both designs. The design without a storage tank has one less component in its design and therefore would be quite a bit less expensive, especially because the storage tank would have to be installed underground. However, after careful thought and research the design team concluded that the design with a storage tank was the best design because there is no guarantee that the water collected from rainfall and winter melt-off alone would create enough pressure to turn a turbine. The design with the storage tank allows the water to build up, so as long as the water level reaches a certain point, in an unlimited amount of time, there is a guarantee of energy production.

Description of Selected Design:

The design team's best design idea incorporated and affected the entire campus while simultaneously helping with one of Penn State's most pressing environmental issues, energy consumption. The hydro-powered generator idea can be applied to a nearly unlimited amount of mountainous landscapes world-wide and therefore can have an impact beyond Penn State's campus boarders.

SolidWorks Model:

FIG. 1. SolidWorks Image of Turbine Blade

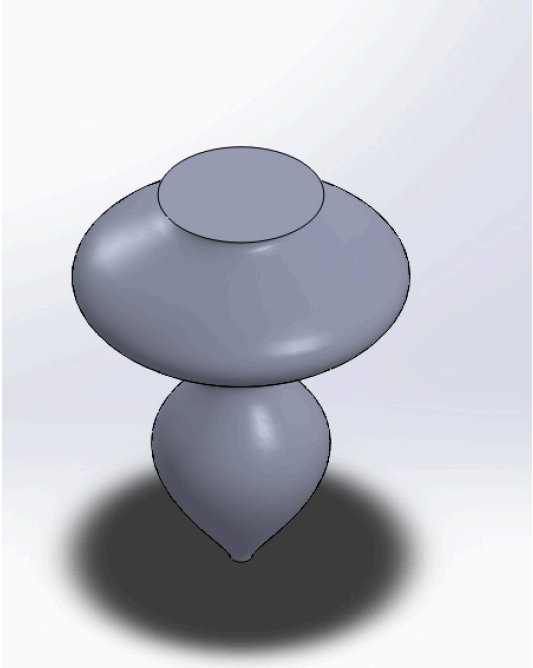

FIG.2. SolidWorks Image of Turbine

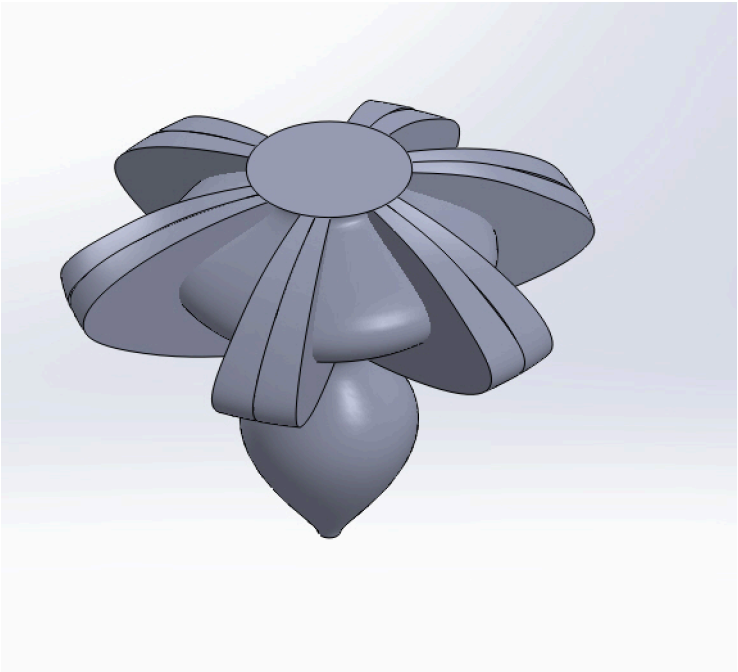

FIG. 3. SolidWorks Image of Turbine/Blade System

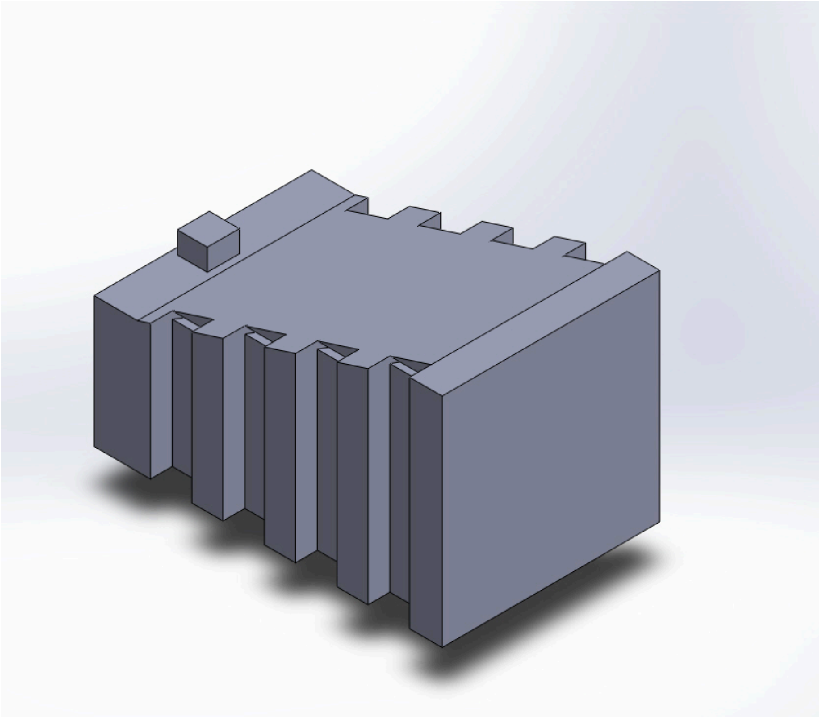

FIG. 4. SolidWorks Image of Implemented System

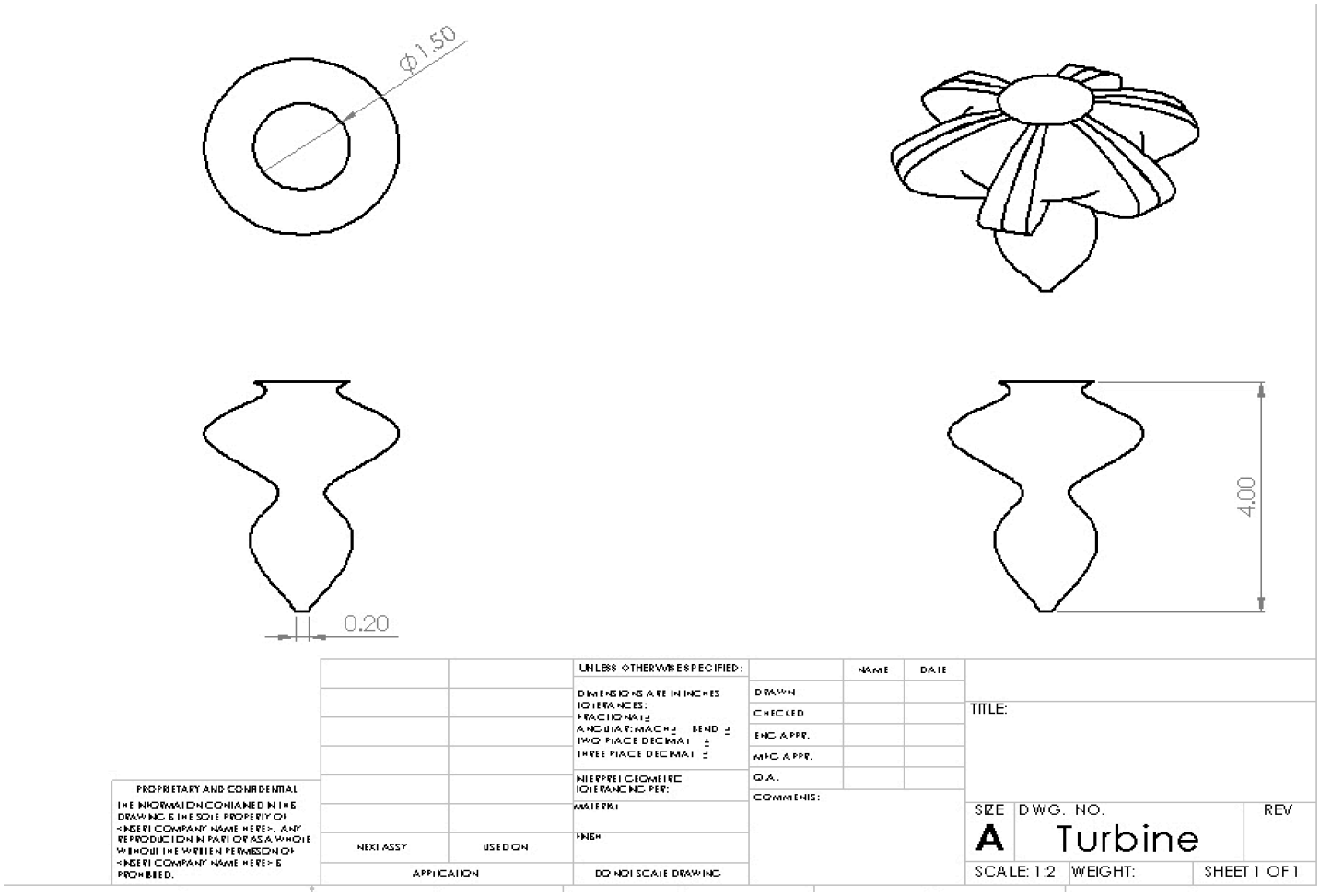

FIG. 5. Drawing of Turbine Part

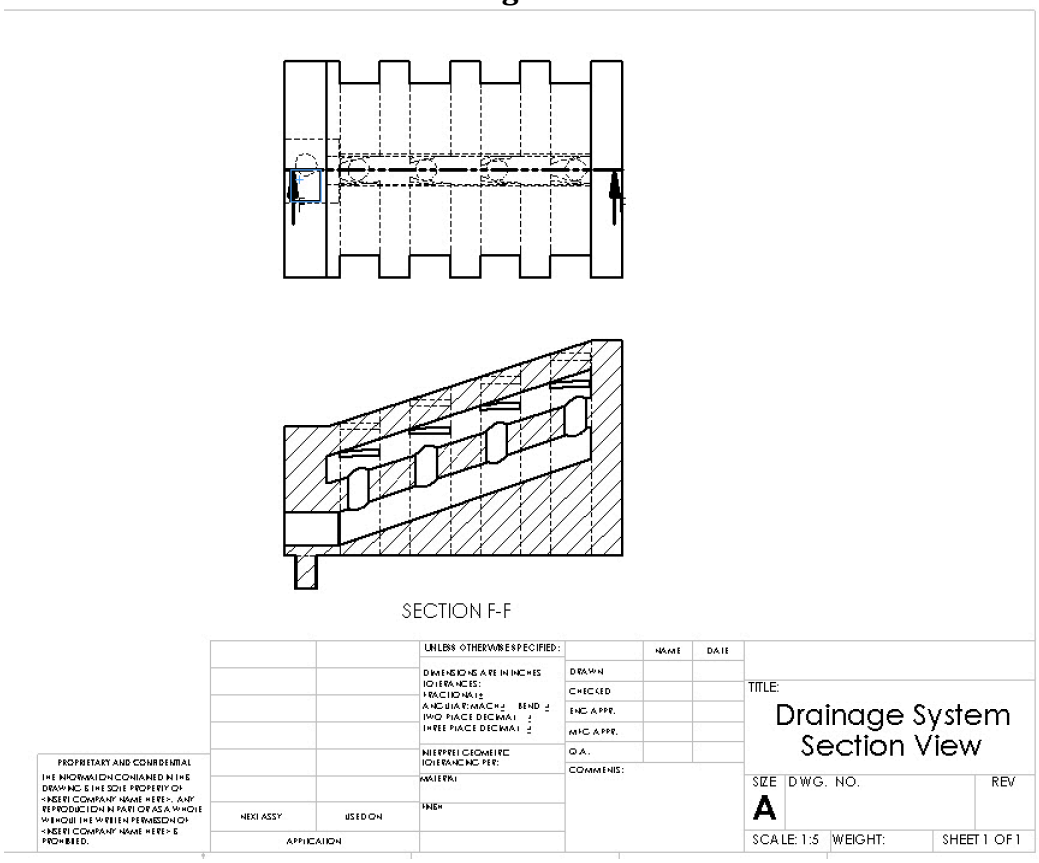

FIG. 6. Drawing of Implemented System

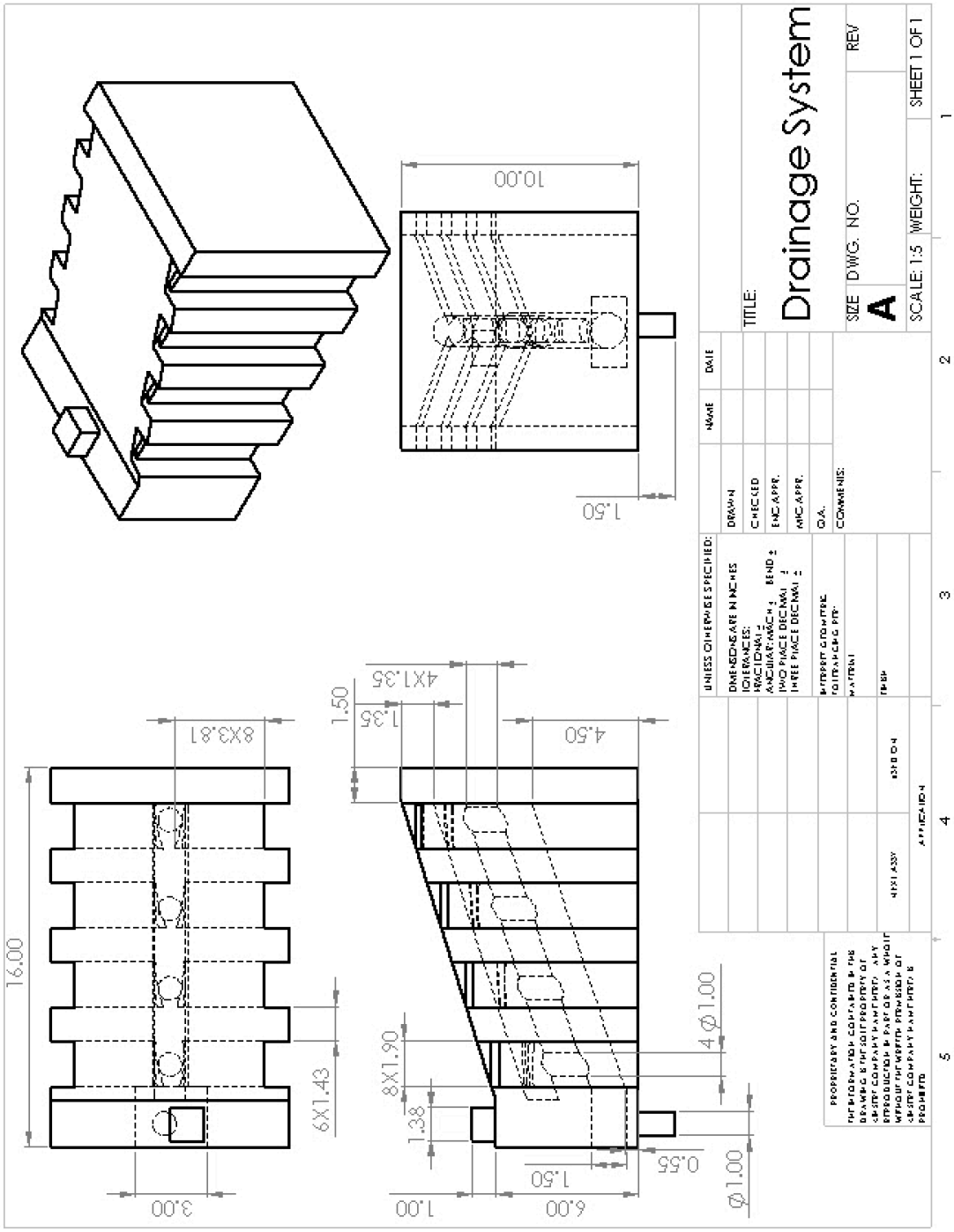

FIG. 7. Drawing of Implemented System (with generator box)

Prototype:

FIG. 8. Image of Prototype

FIG. 9. Image of Prototype

FIG. 10. Image of Prototype (Turbine)

Working Mechanism:

The system works as follows:

During storms and during early spring when the snow buildup from long winters at Penn State melts off, there is a large amount of water drained into a series of drains along each road throughout campus as well as along some sidewalks. The water is then sent to a series of underground pipes and drained appropriately to underground aquifers to replenish the water table. The design teams mechanism, instead of instantly pumping water back into the ground, sends the water instead to a main pipe running down a large hill on campus. In addition to this water, a large quantity of water used in both showers and sinks, or "grey water" is also used on campus each day and is sent into the drainage system after use. All of the water rushes down this main drainage pipe into a collecting pool underground where it builds up until it reaches max capacity.

Once the collecting pool reaches max capacity, a sensor alerts a narrow door on the bottom of the pool to open and allow water to rush out with high pressure onto a turbine. The pressure of this water against the turbine forces the turbine to rotate around its central axis. The turbine is connected to the rotating mechanism in a generator that produces the energy necessary, while another part of the generator turns this rotational kinetic energy into electricity. The electricity is then connected by wires to the campus' main electricity power lines, adding free electricity to the power grid that can be transferred anywhere along campus boarders.

Design Features:

- The system uses an already implemented drainage system; the design would just be an addition to a system already put in place
- The system reuses water that already served a purpose (sinks, washing machines, showers)
- Once installed, the underground portion of the system should be able to last over 100 years without maintenance
- Other than installation costs the system runs effectively without any costs; using nothing but gravity associated power to produce energy
- The electricity from the hydro-powered generator may be applied nearly anywhere on campus, the generator is connected to the power lines running underground throughout campus
- The system will help with electricity production when it is able to (i.e. when there is water build up) but will not use energy or require shutdown when there is no water buildup in its collecting pool
- There are several places on campus where the system can be placed, the design team only focused on one, the system can be put in place anywhere with a steep incline

Concept Generation:

The ideas for turning a college town into a sustainable city are limitless, especially at a campus such as Penn State's. There are thousands of people; hundreds of buildings built in various architectural manners, businesses strung out all through the area, thousands of vehicles and thousands of farm animals. The design team wanted an idea that could apply to each and every one of these coordinating parts of a college campus. Rather than focusing on specific buildings, people and parts of campus, our team focused on the campus as a whole. There is a common element involved in each and every part of a college campus: the need for energy. The design team then focused on an aspect special to Penn State, which is the fact that a large majority of the campus is an incline, however there are many campuses nation-wide, for instance West Virginia University, which could benefit from the team's design idea.

Engineering Analysis:

- Water enters drainage system through many drains throughout campus as well as from residential excess water pipes
- Water is transported via already established piping system to main drainage pipe running down the largest incline on campus
- Water runs down main drainage pipe due to gravity
- At end of pipe, water flows into a large pool underground
- Once water reaches maximum capacity, mechanical doors open and water flows at high pressure to turbine system
- The turbine begins to rapidly spin due to water pressure
- The spinning turbine turns gears of the above generator, starting the electricity production process
- The generator is attached directly to campus electrical wires, allowing the electricity to transfer directly to the already flowing electricity source

Cost Analysis:

Below is a detailed chart showing total cost of our design. Although the price of our design is relatively expensive, the design is extremely beneficial in both the environment and sustainability. The design, once implemented, should cost little to nothing to keep functioning after installation. Except for a few minor repairs, the design should begin paying back its installation costs moments after insertion into the ground. Electricity is expensive, and at a campus with over 50,000 students and faculty, every dollar saved makes a difference.

Part Name	Material	Quantity Needed	Cost/Unit	Total Cost/Part
1" Pipe	Aluminum	7,780	$3.50	$27,230.00
Pool Structure (Aluminum Sheets-4x10 ft)	Aluminum	5	$200.00	$1,000.00
Turbine	Aluminum	1	$1,000	$1,000.00
Generator	Multiple Materials	1	$5,000	$5,000.00
Generator Housing	Aluminum	1	$1,000	$1,000.00
Electrical Wire (250 feet)	Metal/Rubber	1	$67.00	$67.00
Pipe Joint	Aluminum	10	$15.00	$150.00
			Total Cost:	$35,447.00

TABLE 4. Cost Analysis

Summary:

Our chosen design idea, the hydro-powered generator, incorporated and affected the entire campus while simultaneously helping with one of Penn State's most pressing environmental issues, energy consumption. The hydro-powered generator idea can be applied to a nearly unlimited amount of mountainous landscapes world-wide and therefore can have an impact beyond Penn State's campus boarders.

Penn State University Hydro-Powered Generator

Ian Nguyen
Qianrui Qi
Ronnie Ryder
Nick Samardzija
EDSGN 100 Design Project 2
Pennsylvania State University
April 22, 2013

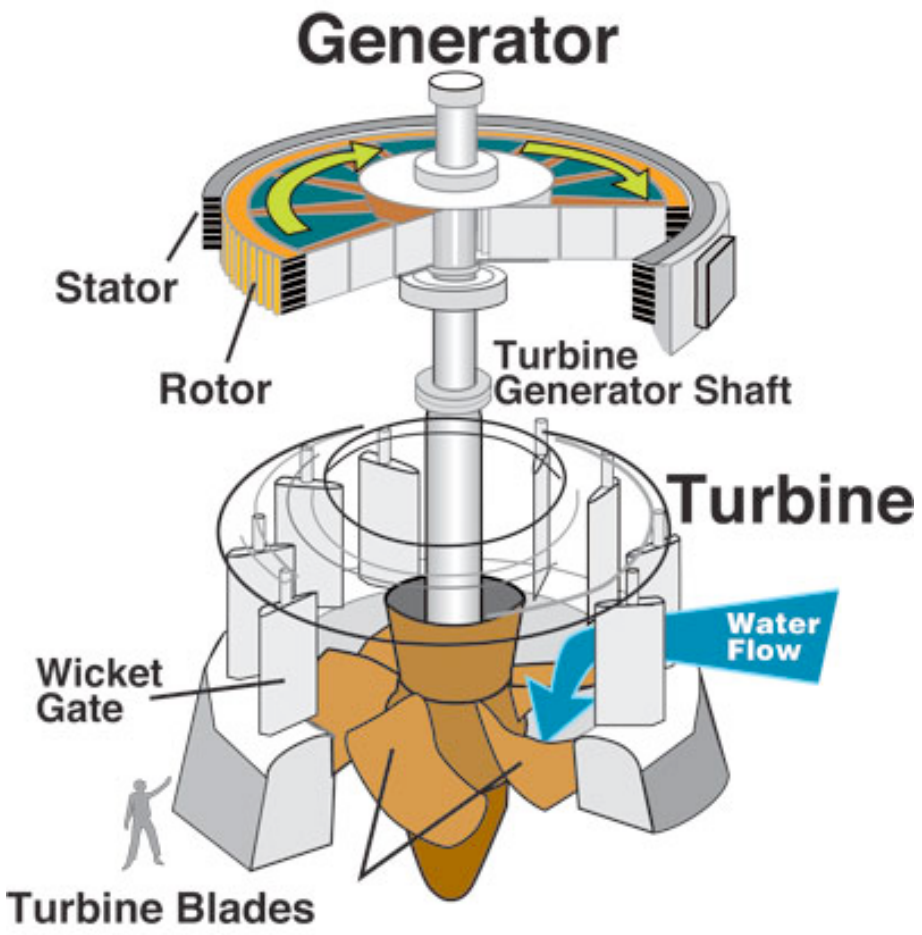

PENNSTATE 1855

SIEMENS

Project Goal

The design team was asked to research sustainable cities and develop an idea that could directly improve Penn State's overall sustainability as a small city, as well as other college campuses nationwide.

This presentation focuses on the design process including brainstorming, idea generation, prototype building and engineering analysis

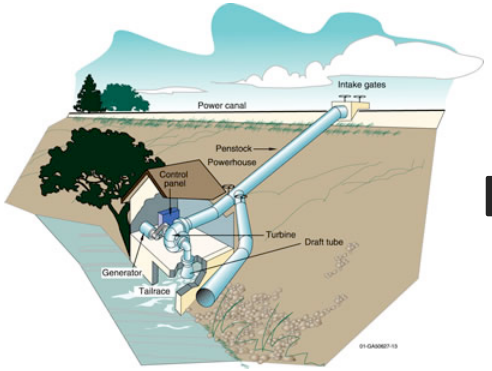

Brainstorming/Idea Generation

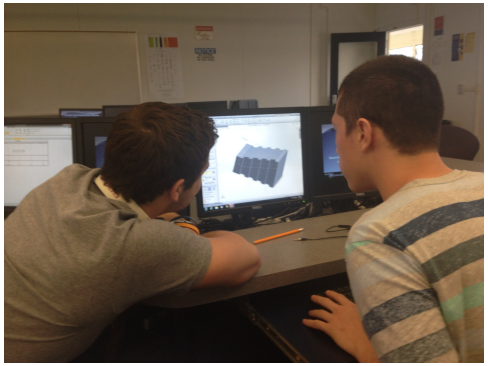

Prototype Design

Prototype Building

Penn State University is built almost entirely on a series of inclines, creating the potential for gravitational power

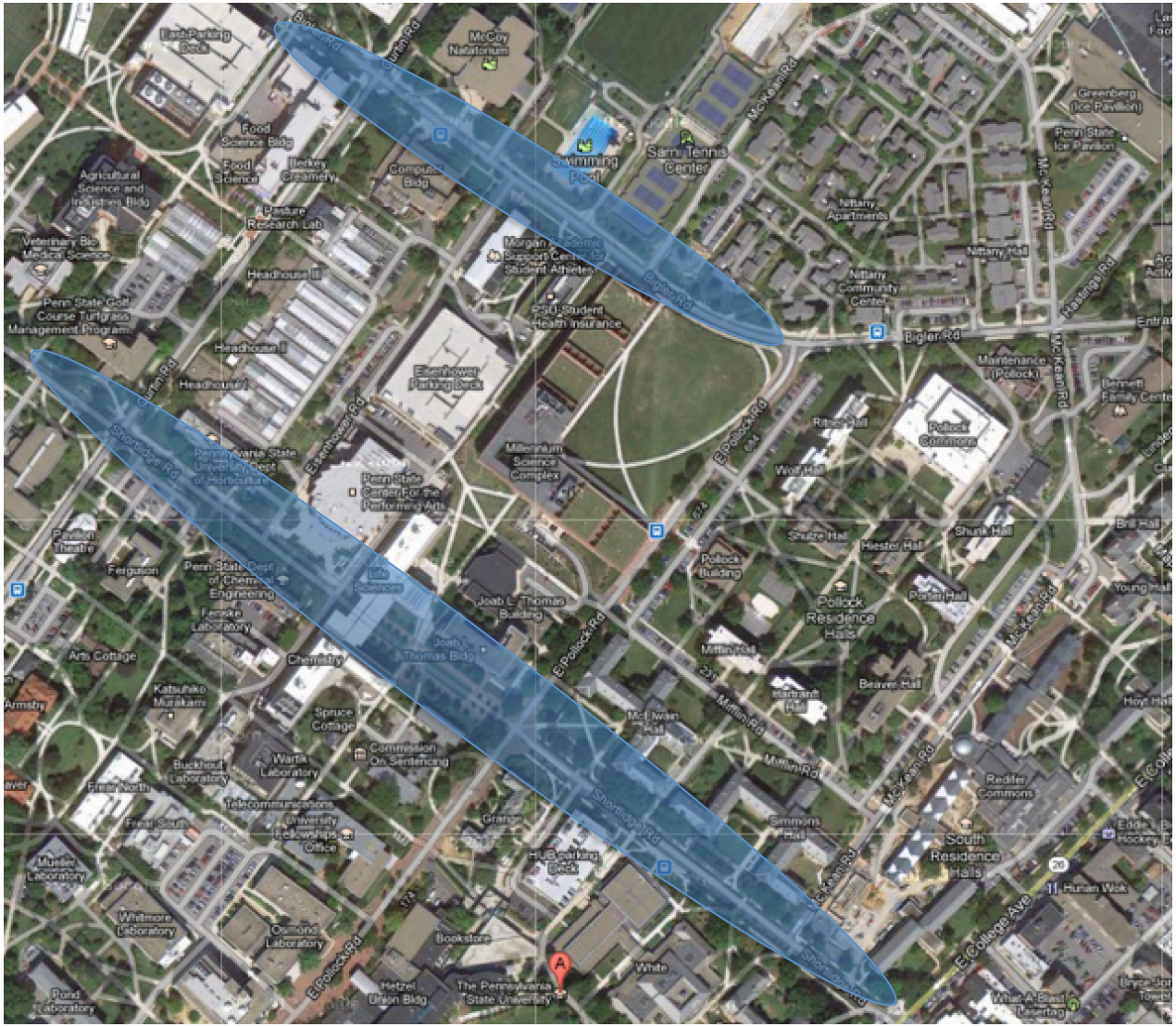

Penn State's natural incline causes water to move downhill requiring zero external energy in transportation

The University promotes the use of conservation design practices that preserve and use natural critical hydrologic areas. OPP extensively monitors all of its watersheds. The University's four primary drainage basins shown here are all differently managed based on the density of development, tributary basin, soils, and geology. For example, the Fox Hollow Drainage Basin, while over 27% impervious, generates surface runoff equivalent to less than 3% of the annual precipitation.

Free energy provided by Earth; let's take advantage!

When there is harsh weather and winter snow melting during the early spring there is a very large quantity of water rushing downhill through campus due to gravity. Why not use the motion of this water and convert it to energy? Hydropower is becoming an important resource in "free" energy, and the money put into building hydropower facilities is reciprocated after a short period of time.

Power Generation Process

Street Drains

Water into drainage system

Gutter Systems

Water into drainage system

Water Storage Pool

Water into storage tank

Hydro-Electric Generator

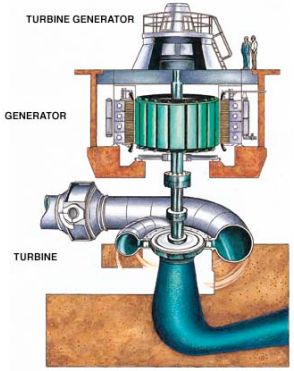

High pressure water turns turbine

Our best design idea, the hydro-power generator, incorporates and affected the entire campus while simultaneously helping with one of Penn State's most pressing environmental issues, energy consumption. The hydro-powered generator idea can be applied to a nearly unlimited amount of mountainous landscapes world-wide and therefore can have an impact beyond Penn State's campus boarders

Design idea: Water rushing downhill builds up in pool, which pressurizes water used to turn turbine, which transfers energy to a generator

Campus Landscape Model

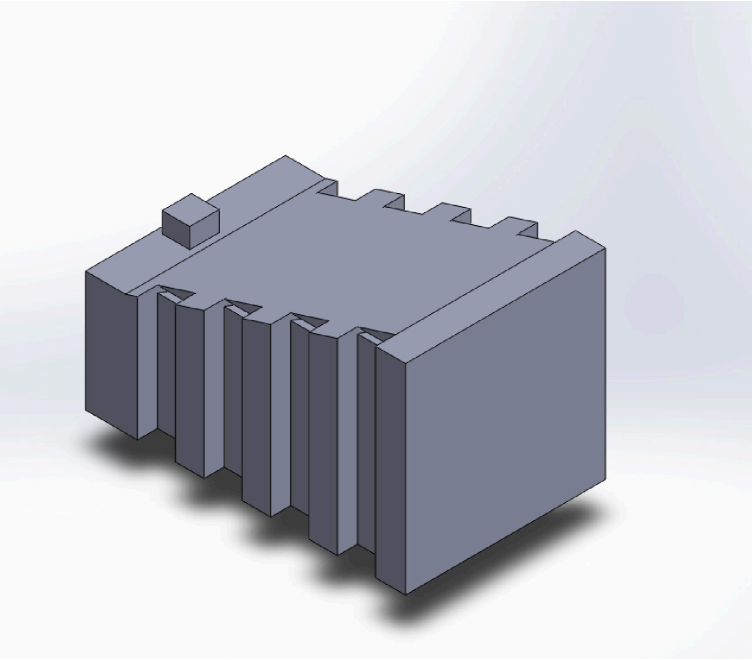

Pool-Turbine System

Any Questions?

Details/Features

- The system uses an already implemented drainage system; the design would just be an addition to a system already put in place
- Once installed, the underground portion of the system should be able to last over 100 years without maintenance
- Other than installation costs the system runs effectively without any costs; using nothing but gravity associated power to produce energy
- The electricity from the hydro-powered generator may be applied nearly anywhere on campus, the generator is connected to the power lines running underground throughout campus
- The system will help with electricity production when it is able to (i.e. when there is water build up) but will not use energy or require shutdown when there is no water buildup in its collecting pool

Summary

- Our paramount design idea incorporated and affected the entire campus while simultaneously helping with one of Penn State's most pressing environmental issues, energy consumption. The hydro-powered generator idea can be applied to a nearly unlimited amount of mountainous landscapes world-wide and therefore can have an impact beyond Penn State's campus boarders.

The Pennsylvania State University

EDSGN 100

Design Project 2

Spring 2013

Sponsored by: Siemens

HYDRO-POWER GENERATOR

By: Ian Nguyen, Qianrui Qi, Ronnie Ryder, and Nick Samardzija

Project Overview

SIEMENS

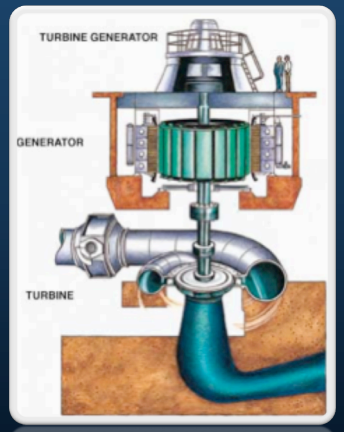

- The design team was asked to research sustainable cities and develop an idea that could directly improve Penn State's overall sustainability as a small city. The options were unlimited, varying from large-scale projects affecting the entire campus to smaller projects that may only affect one building or area of campus.
- After extensive research into several areas of sustainability the design team came up with a plan to use water and the force of gravity to produce energy in coordination with Penn State University's inclined landscape

How The Design Works

- Drains already in place on campus send water from snow melt off and precipitation through normal drainage pipes
- This drain water, rather than being transferred to various areas around campus, is transferred to a main drainage pipe that is run down a large incline
- All of the water rushes down this main drainage pipe into a collecting pool underground where it builds up until it reaches max capacity
- Once the collecting pool reaches max capacity, a sensor alerts a narrow door on the bottom of the pool to open and
- The pressure of this water against the turbine forces the turbine to rotate around its central axis. The turbine is connected to the rotating mechanism in a generator that produces the energy necessary, while another part of the generator turns this rotational kinetic energy into electricity
- The electricity is then connected by wires to the campus' main electricity power lines, adding free electricity to the power grid that can be transferred anywhere along campus boarders