Ryan Blessington

0007 McKee Hall, University Park, PA 16802, U.S.A. | Phone #: (610)357-6729 | Email: rkb5226@psu.edu

Education

Penncrest High School, Media, PA

- General Education HS Diploma; Graduated: 2015
- GPA: 4.1
- Class Rank: 15/343
- Extracurricular Activities: Science Olympiad, Physics Olympics, Soccer, Model UN

The Pennsylvania State University, University Park, PA

- Major: Aerospace Engineering(intended)
- Status: Freshman
- Intended Graduation: May, 2019

Technical Skills

CAD DESIGN

- Solidworks; 2 years of experience

CODING

- Javascript; 1 year of experience
- C++; 2 years of experience

Work Experience

LAB ASSISTANT | BROOKSIDE CLINCAL LABORATORIES | 05/2013-12/2014

- Assisted with lab logistics such as handling deliveries, keeping track of inventory, and waste management

PRIVATE TUTOR |09/2014-08/2015

- Held private sessions with several high school level students in subjects such as Calculus, Physics, Biology, US/European History, Statistics, Chemistry, etc.

Interests

ROBOTICS

- Completed private projects in high school such as a robotic arm
- Gained valuable experience in circuitry, programming, design, machining and fabrication

COMMUNITY SERVICE

- Involved in NHS in High School; participated in Main Street Elementary School tutoring program in Chester, PA, organized district-wide fundraisers for the Special/Para-Olympic foundations such as the annual Dodgeball and Volleyball tournamnets
- Currently involved in Penn State's Boulevard service group as well as the E-House Community Service Committee

References

JIM CICCARELLI | EMAIL: JCICCARE@RTMSD.ORG | PHONE #: (610)627-6392

· Relation: Science Olympiad Coach(4 years), Physics Teacher(3 years)

Course Syllabus

Course overview and objectives:

This is a design-driven course with emphasis placed on skills such as: team-working, communication skills (graphical, oral, and written), and computer-aided design and analysis tools. The course will introduce students to the engineering approach to problem solving with strong references to basic science and math skills, as well as testing and evaluating design ideas by building prototypes. The design projects are the total of at least 30 hours of in-class work (one third of the course). Two design projects will be assigned during the semester. The design projects will require the students to work in a team. **The course grade for the students will reflect their abilities to function effectively as team players.**

Skills acquired by students during the course:

Computing:	Solid Modeling/CAD, EXCEL (spreadsheet), PowerPoint (multimedia presentation)
Internet Skills:	Designing and publishing a basic webpage
Graphics:	Sketching, orthographic projections, multiview drawings, scales, dimensioning, isometric pictorial, oblique pictorial, sections, working drawings
Lab Skills:	experimental methods, data acquisition & analysis, prototype building & testing
Design Methods:	customer needs assessment, concept generation, design selection matrices, design for assembly- disassembly, safety, cost effectiveness, teamwork, and other constraints as need by the project

Grade Distribution:

A	**Design Graphics** Graphics Homework Assignments	15%
B	**Solid Modeling & Conceptual Design Project** Exercises and Quizzes (15%) Project (10%)	25%
C		40%
	Design Modules Project I (15%) Project II (20%) Online Design Portfolio (5%)	
	Exam No. 1	10%
	Exam No. 2	10%

TOTAL	100%

Grades will be determined based your performance on the activities listed above. Final letter grades will be assigned as follows:

> 93 = A 90-93 = A- 87-89 = B+ 83-86 = B 80-82 = B-
75-79 = C+ 70-74 = C 60-69 = D below 60 = F

Practice Problems & Exercises

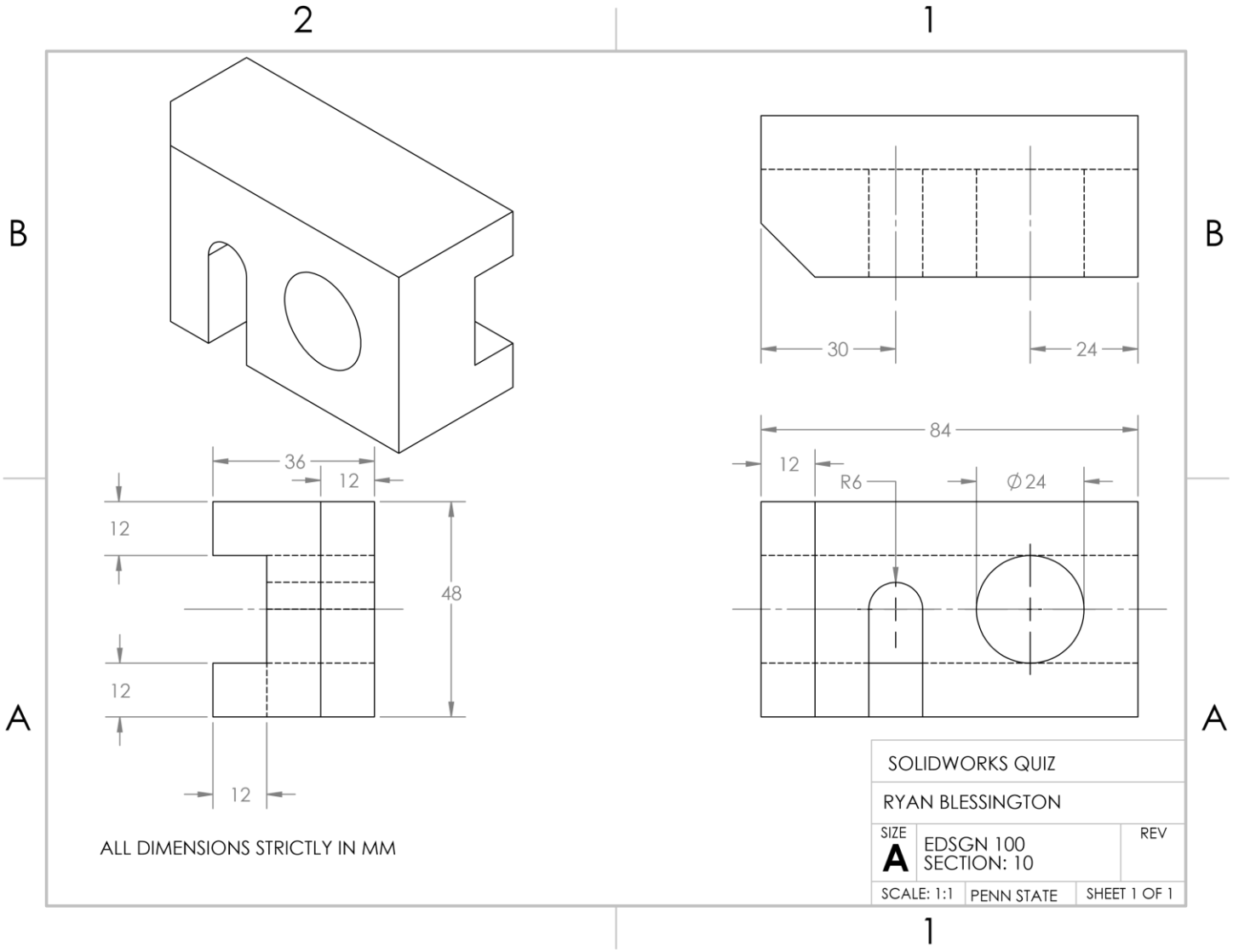

Fig. 1. Students were taught and quizzed on creating and dimensioning solid 3-D models and drawings

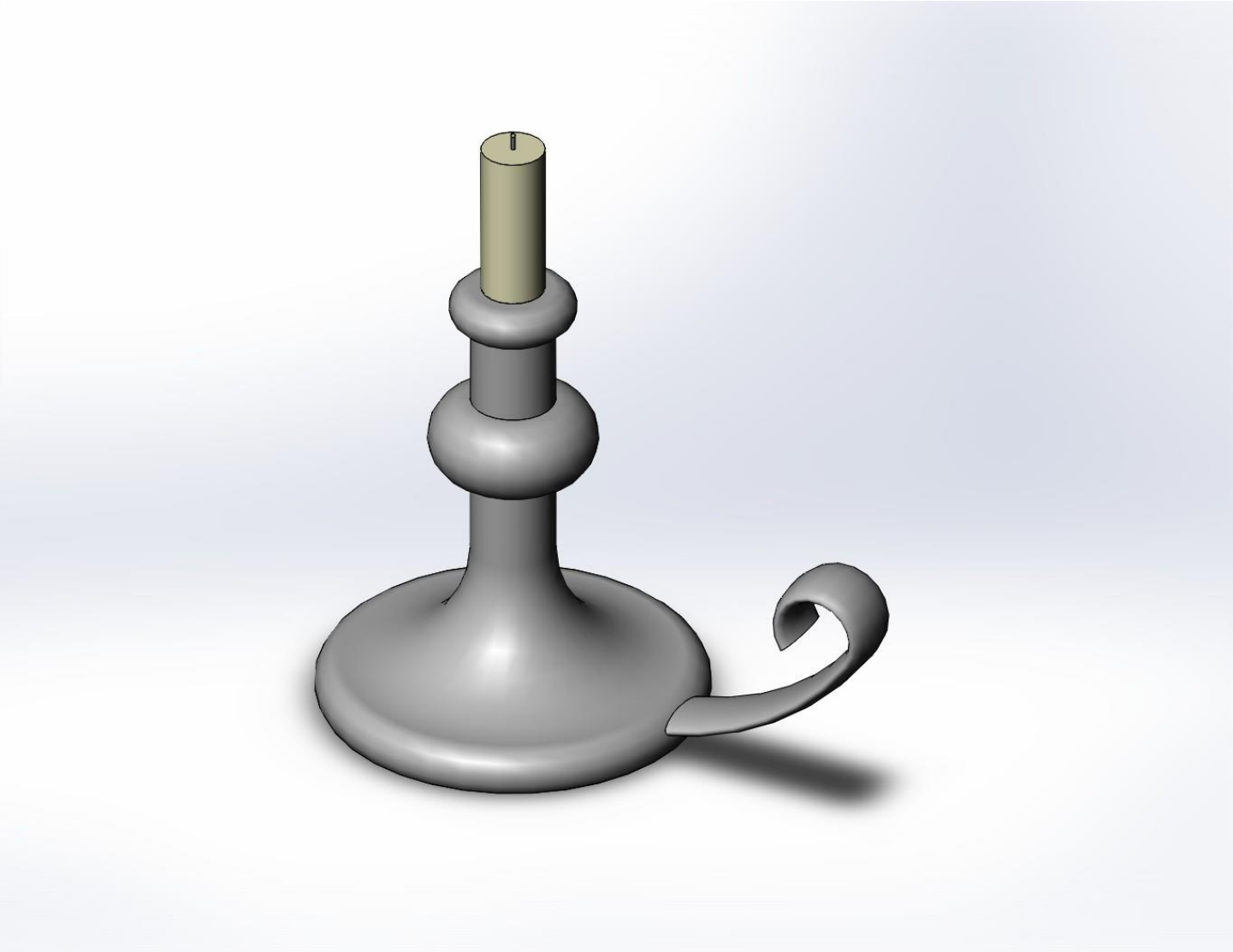

Fig. 2. Students were also versed in more advanced CAD techniques such as lofts, sweeps and revolves which were used to create the above model

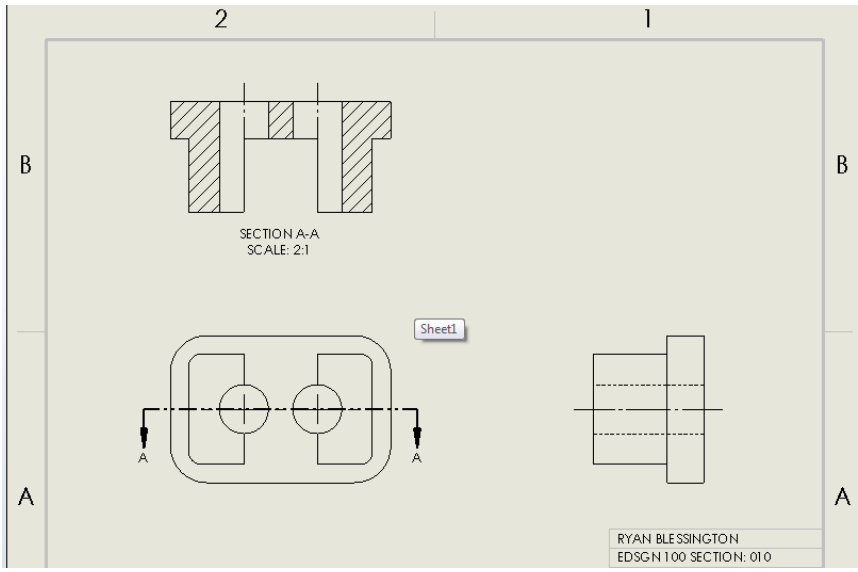

Fig. 3. Students learned how to create different views to more accurately describe a model such as detail views and sectional views like the one pictured above

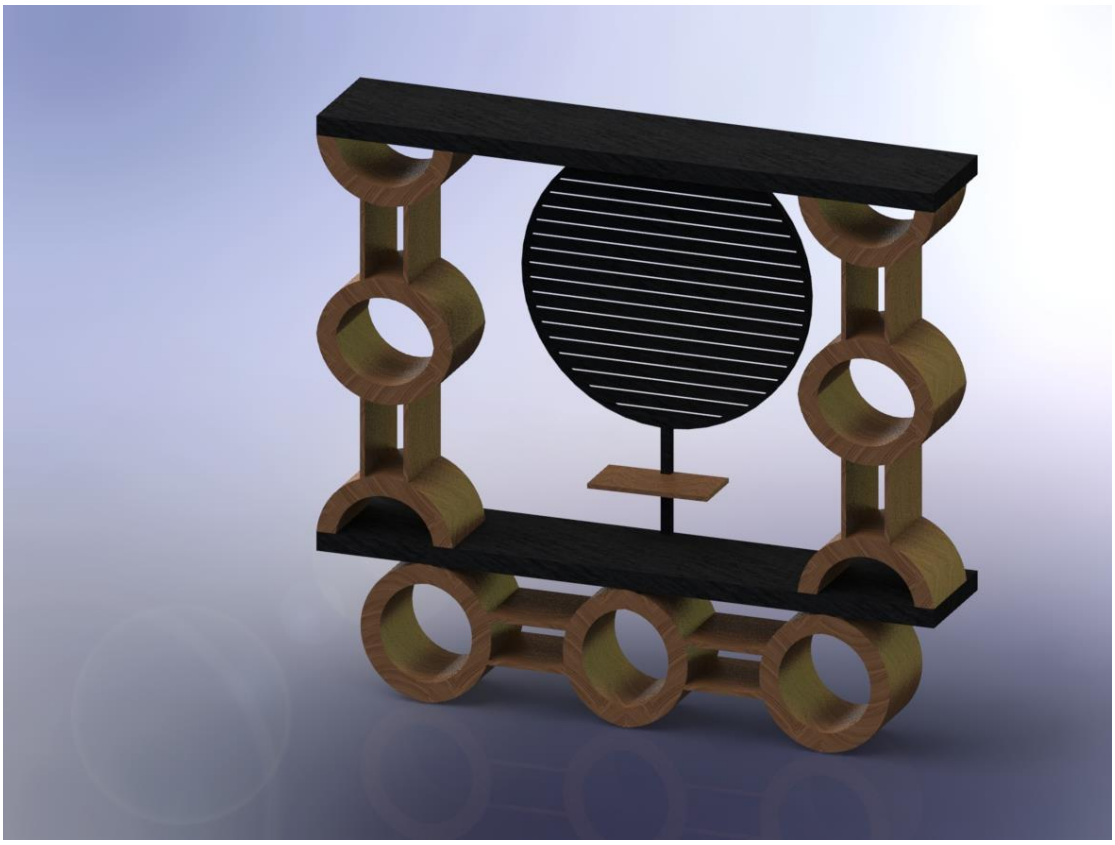

Fig. 4. All these newly learned CAD technique culminated in a free form creative project in which students were to design an aesthetically pleasing and functional entertainment system with an emphasis on originality

Design Project I

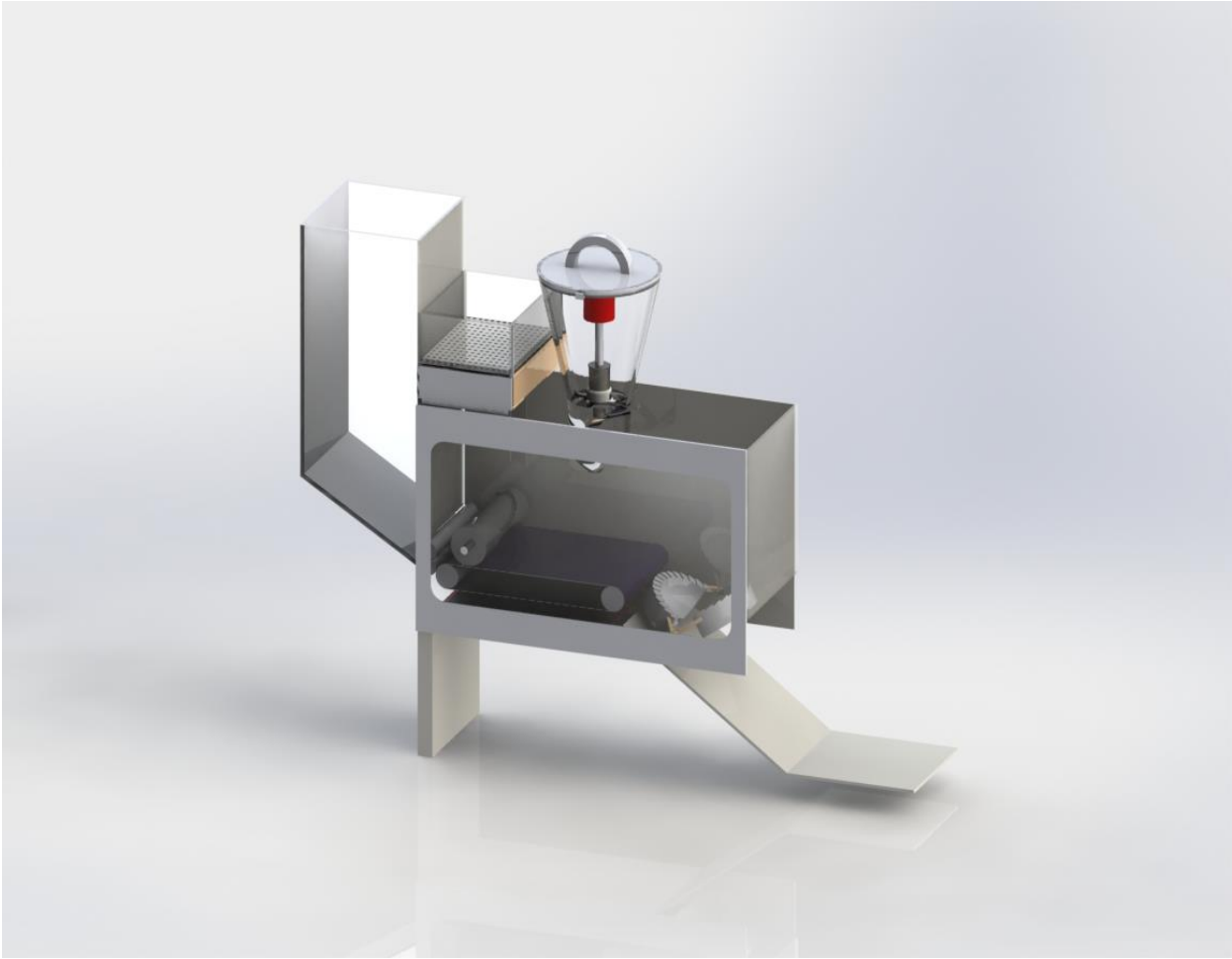

Fig. 5. Solid 3-D model of final dumpling maker design

Project Description Page

Final Assembly Drawing with Bill of Materials

Project I Website

Main Design Features:

- Tight, compact model for easy storage within the modern home
- Intuitive design with little input from the operator besides dough input
- Is capable of producing upwards of 30 folded dumplings per minute
- Slick Teflon surfaces and detachable front panel make for easy clean-up
- Fully operational, detachable blender with top mounted latching motor to allow blending when mounted to the device or standalone
- Translucent paneling for easy observation of ingredient levels and machine progress
- Flour-sifter to prevent dough blockages
- Slide for easy export
- Removable dough collection tray to allow excess dough to be reused and preventing conveyor belt build up
- Affordable, convenient machine design for the domestic market

Design Project II

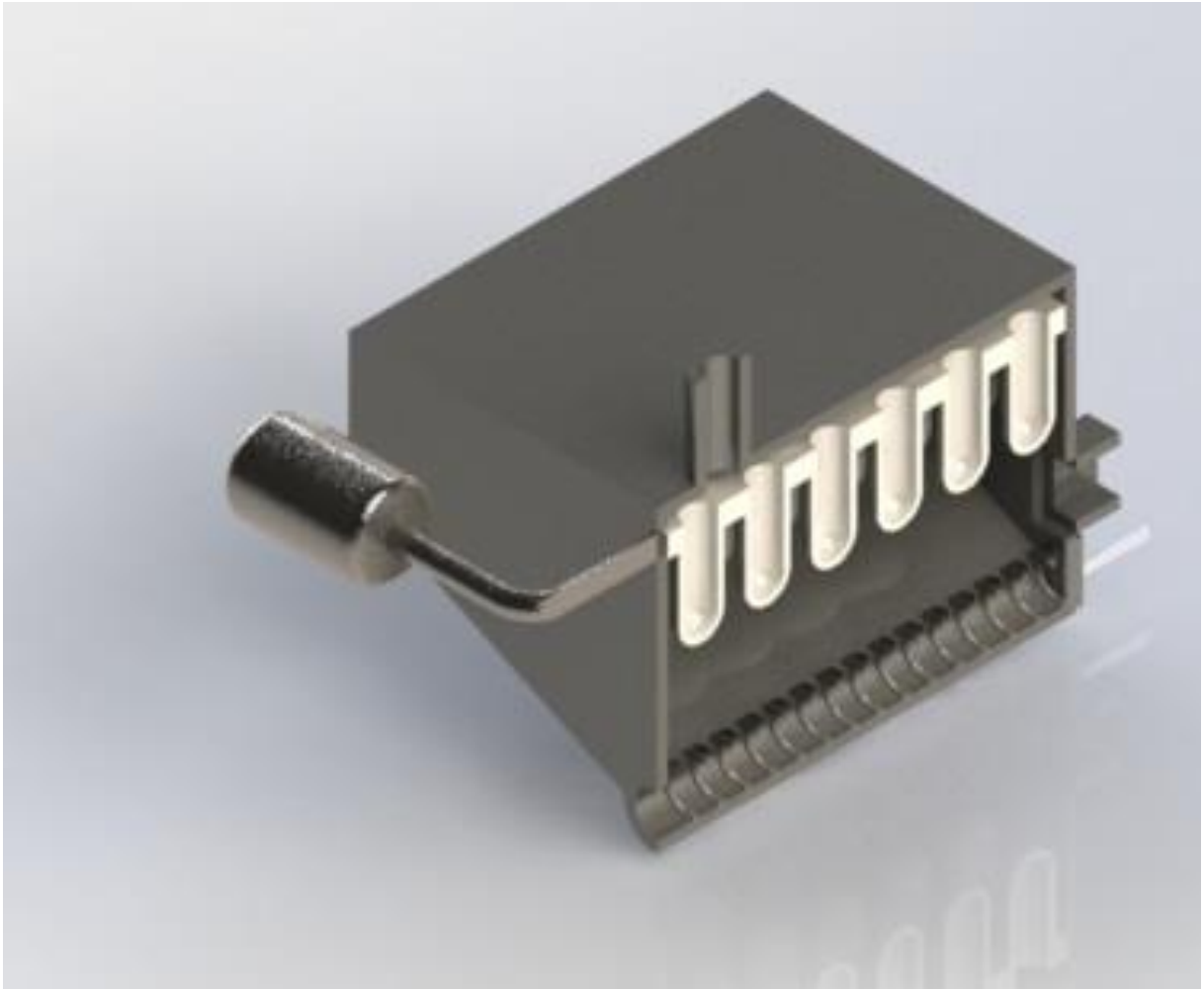

Fig. 6. Full Render 3-D sectional model of the Selective Catalytic reduction after-treatment system the design team retrofitted into the locomotive exhaust system

Project Description Page

Final ATS Assembly Drawing

Design Project II Website

Main Design Features:

The design features of this solution are numerous and can be attributed to both the cleaner B20 fuel and the intelligent design of the ATS. The conversion to b20 fuel is advantageous in both an environmental and economic context. This change leads to an immediate decrease in particulate matter emissions and require no changes to existing infrastructure as well as maintaining any existing warranties on equipment that would be voided by other alternative fuels. B20 is the right fit economically for the Pittsadelphia region, located in Pennsylvania, has a relatively large and growing supply of biofuel making B20 almost twenty cents cheaper per diesel gallon equivalent. The conversion to

biofuel also gives the city itself an opportunity to make money and increase its sustainability and get rid of harmful waste in a productive matter in the form of a landfill waste processing plant that turns dead organic matter into cost efficient biofuel. The ATS system's ceramic filter allows for efficient operation in across a wide range of temperatures peaking at approximately 1650 degrees Fahrenheit fairly close to the exhaust temperature of diesel engines. The addition of dry sorbent injection into the system extends the lifetime of the catalyst to about 15 years as well as filtering out environmentally invasive gases such as SO2 and hydrocarbons. The embedded zeolite mineral catalyst converts NOx to N2 and H2O in the presence of ammonia at a 90% efficiency under optimal conditions. The on-board ATS computer collects data from the hyperspectral NOx scanners and calibrates the distribution of ammonia to match the workload of the engine and will then check that the system is operating as expected by taking data from another NOx scanner in the final exhaust pipe. This electronic component allows for immediate failure detection and adjustment. A pulsating air compressor ensures that system neither overheats nor becomes obstructed by larger particulate matter, which once blown to the bottom of the system is collected and exported via a mechanical auger into a containment unit, decreasing total particulate matter emissions by over 90%. The shape of the filter is also conducive to its efficiency as hot exhaust rises and becomes trapped between the extruded hollow monoliths forcing it to diffuse through the ceramic membrane as more gas rises. This ability to self-cleanse ensures that the system can run continuously with little intervention other than the scheduled refilling of chemicals. The system is also located conveniently at the top most point of the locomotive for easy maintenance and removal if necessary. The simplistic design can be universally manufactured locally and installed gradually to eliminate fleet downtime and ensure Pittsadelphia residents receive their freight on time during the transition period.

Summary and Conclusions

Through his valuable experience working with teams of engineers, the design process, solid prototypes, and the *Solidworks* computer aided design software, Ryan Blessington has developed as both an engineer and a person. He learned to think critically and make efficient use of space from his group's first design project and how to effectively analyze system sustainability and economic viability in the long run from his work the second design project. The experience with CAD allowed him to more accurately express his new ideas in more widely understood medium and his lessons on engineering ethics have prepared him for real-world decision making. The edesign 100 course was both challenging and rewarding and laid the vital foundation for Ryan to grow into a productive engineer.

Acknowledments

Thanks to group four, section 10, and Xinli Wu for a great fall semester.