http://www.personal.psu.edu/mpt5217/edsgn100_fa15_section9_team8_dp2.pdf/

EDSGN 100 Introduction to Engineering Design

Section 009 Team 8

Transportation and Emissions

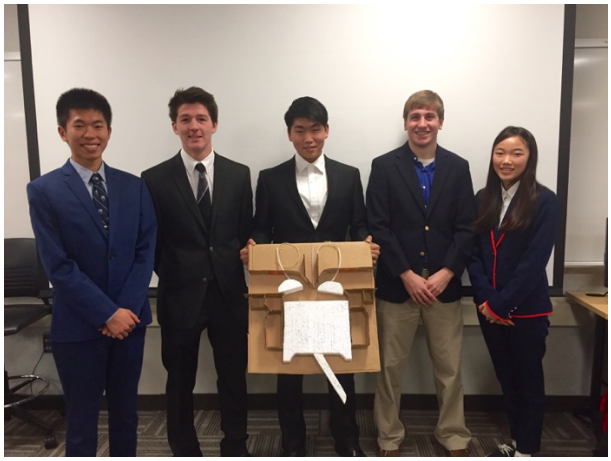

Submitted by: Michael Truong (chief editor), Hank Haly, Steven Min, Stephen Herrick, Ruiye Yao

Submitted to: Xinli Wu

Fall 2015

Table of Contents

Abstract	Steven Min	1
Introduction	Hank Haly	2
Problem Statement	“ “	2
Mission Statement	“ “	2
Design Specifications	“ “	2-3
Gantt Chart	Stephen Herrick	3-4
Concept Generation	“ “	5-6
Concept Selection Design Matrix	“ “	7
Best Design Description	“ “	7
Assembly Drawing	Steven Min	8
Parts Drawings	“ “	9-11
Analysis	Ruiye Yao	11-12
Summary and Conclusion	Michael Truong	13
PowerPoint Presentation Slides	“ “	14-19
References	“ “	19

Abstract

The team came up with a cost effective solution to EPA's Tier 4 requirements for NO_x and particulates emissions. The team changed the locomotives by switching diesel to biodiesel fuel and implemented water injection into the fuel combustion chamber. Both solutions were cost effective and reduced NO_x and particulate emissions.

Introduction

The city of Pittsadelphia is a bustling town with about 165,000 tons of cargo coming in and out every day. The only problem with having so much freight being moved is the smog created from transporting it. GE has asked for a cleaner means of transportation with greatly reduced NO_x and PM (particulate matter) while maintaining or increasing freight capacity by upgrading their current fleet of locomotives from Tier 2 to a Tier 3 or 4. The idea introduced will change the fuel from 100% petroleum diesel fuel to 80% petroleum diesel and 20% biodiesel, greatly reducing the emissions of PM. It will also introduce a water injection system to the combustion chamber which will increase power and efficiency while reducing NO_x emissions. This report will describe why certain design aspects were chosen or not chosen and a description of the water injection system prototype.

Problem Statement

With smog levels in Pittsadelphia higher than ever, the citizens are very upset. GE cannot lower their tonnage transported per day, so they are searching for a new system that will solve the problem of emissions from their fleet of locomotives while being cost efficient and not lowering power output and fuel efficiency.

Mission Statement

Without sacrificing any power or fuel efficiency, this model will aim to reduce the emissions of both PM and the NO_x causing the smog, therefore upgrading the fleet from Tier 2 to Tier 4. The model will achieve these goals while being budget friendly over a number of years.

Design Specifications

The design will be a cost efficient method to reduce smog by reducing NO_x emissions. The change of fuel will not sacrifice any power, reduce particulate matter, carbon monoxide, and

hydrocarbons, and also will be cost efficient. These two methods will work together to reduce emission as Tier 2 locomotives are upgraded to Tier 4 locomotives to reduce emissions even further and will adhere to EPA guidelines.

Design Approach

Gantt Chart—Table 1.1

At Risk	Task Name	Start Date	End Date	Assigned To	Duration	% Complete	Predecessors	Comments
	Need Help? Learn more about this template.							
	Deadline	12/09/15	12/09/15		1d			
	Info Gathering	10/19/15	11/11/15		18d			
	Brainstorming	10/19/15	11/02/15		11d			
	Concept Selection	11/02/15	11/09/15		6d			
	Validating Concept Selection (Research & Development)	11/09/15	11/11/15		3d			
	Build & Test Prototype	11/11/15	12/02/15		16d			
	Gather Materials	11/11/15	11/16/15		4d			
	Build Prototype	11/16/15	11/30/15		11d			
	Prototype Grade & Effectiveness	11/30/15	12/02/15		3d			
	Documentation & Presentation	11/23/15	12/07/15		11d			
	Creating Documentation	11/23/15	12/02/15		8d			
	Formal Oral Presentation Preparation	12/02/15	12/07/15		4d			
	Documentation & Online Design Portfolio	11/23/15	12/09/15		13d			

Table 1.2

Table 1.3

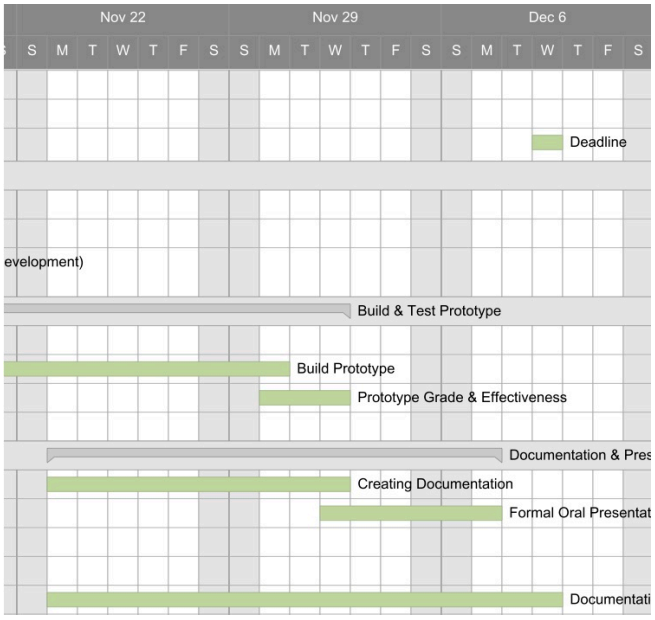

Concept Generation

The concepts that were generated were direct results of the problem statement and the determined mission statement. Basically, since the main goal was to design an eco-friendly process that reduced emissions and pollution, the generated ideas were formed around those and gradually took better shape after some research and development.

Concept 1—The first system design does not include trains, but rather uses the idea of ships being carriers of freight. Ships seem like the best option because of their freight capacity and reduced emissions, but they take a much longer time than trains. The first brainstorming session revolved around making ships faster by including some sort of motor, which would be expensive, raise emissions, and effectively complicate the shipping process as a whole.

Concept 2—Concept 2 began the brainstorming shift back to trains. The only real problem that was observed with the train system was the amount of emissions released, so the goal was to reduce emissions. This concept involved switching the regular diesel fuel in trains to biodiesel in the form of B20, which is readily available in most cities around the U.S., especially coastal cities. One major advantage of B20 fuel is that it is that it is already compatible with the engines being used in the train systems now. Also, at the same price as diesel, B20 reduces all types of emissions with the exception of nitrous oxide gases, represented by NOx.

Concept 3—NOTE: Starting with Concept 3, remaining designs are based off of the assumed use of Concept 2, and aim to work on improving the system along with Concept 2. The third design involves implementing turbochargers into the engines of trains, which would effectively reduce all emissions, even NOx, as well as increase the power and drive of the engines of each locomotive.

There are already two turbochargers in each locomotive, but as multiple turbochargers can be included in a single engine, the idea remains, though it is costly and redundant.

Concept 4—The fourth idea followed up on the third in terms of reducing NOx emissions. This concept is all about NSCR, or Non-Selective Catalytic Reduction. This process involves greatly reducing NOx emissions in engines by using a reagent such as ammonia or urea to react with NOx molecules and make them less harmful, which is ideal for this design. However, the process is very expensive, and it can only occur at extremely high temperatures (1600°F+), which would require a lot of energy to power.

Concept 5—Concept 5 is the idea of a water/steam injection system to reduce NOx. In this process, water is injected as a coolant that lowers the temperature but still allows for the reactions in the engine to occur. These lower temperatures reduce NOx output significantly and help to clean the engine, making it more efficient. It is also very cost effective.

Design Selection Matrix

Table 2.1

Category	Concept 1	Concept 2	Concept 3	Concept 4	Concept 5
Cost	0	++	-	-	+
Emission Reduction	+++	++	+	++	+
Speed	-	0	++	0	+
Efficiency	0	++	-	--	+
Simplicity	0	+	0	-	+
Extra Pros/Cons	0	- (slightly raises NOx levels)	0 (more power/ drive; redundant)	- (requires large amounts of energy)	+ (Cleans engine/ more efficient)
TOTAL	+1	+6	+4	-3	+6

Description of the Best Design Selected

Concepts 2 & 5 are easily the most attractive of the bunch. Concept 3 is also useful, but because turbochargers are already included in these engines, the idea was not chosen. Concept 2 (B20) is very simple, cost-effective, and great at reducing most emissions, its only fallback being the slightly increased percentage of NOx emissions. While it is already an ideal selection for the design, it was felt that the design could be improved with the addition of another idea. Thus, Concept 5 (water injection) was generated, which would be cost-effective, greatly reduce NOx emissions, and also clean the engine interior, improving the efficiency of the locomotive itself. These two concepts combined form an unparalleled and ideal solution to the problem, which is why they were chosen to answer the mission statement.

Prototype

Assembly Drawing—Table 3.1

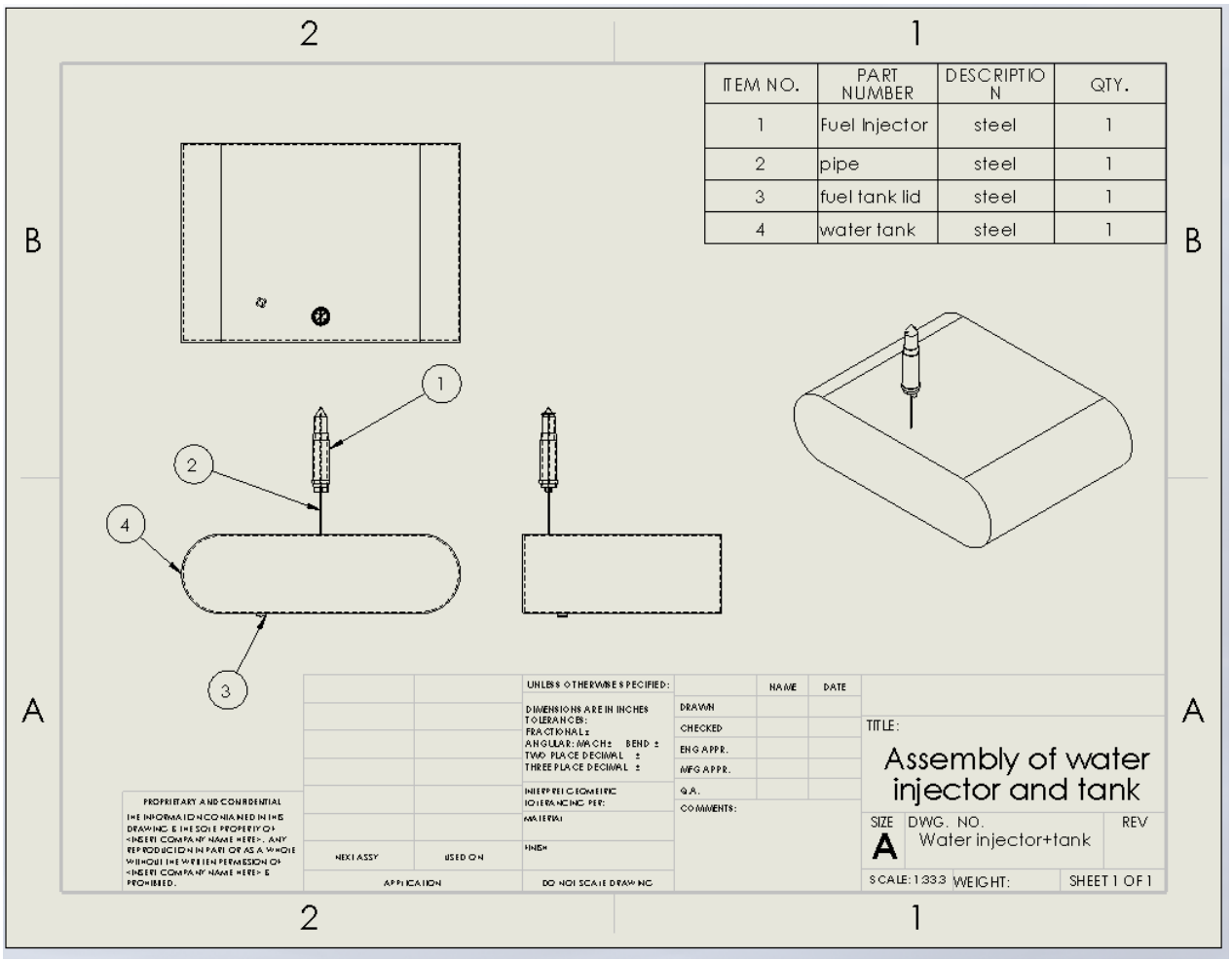

Parts Drawings—Table 4.1

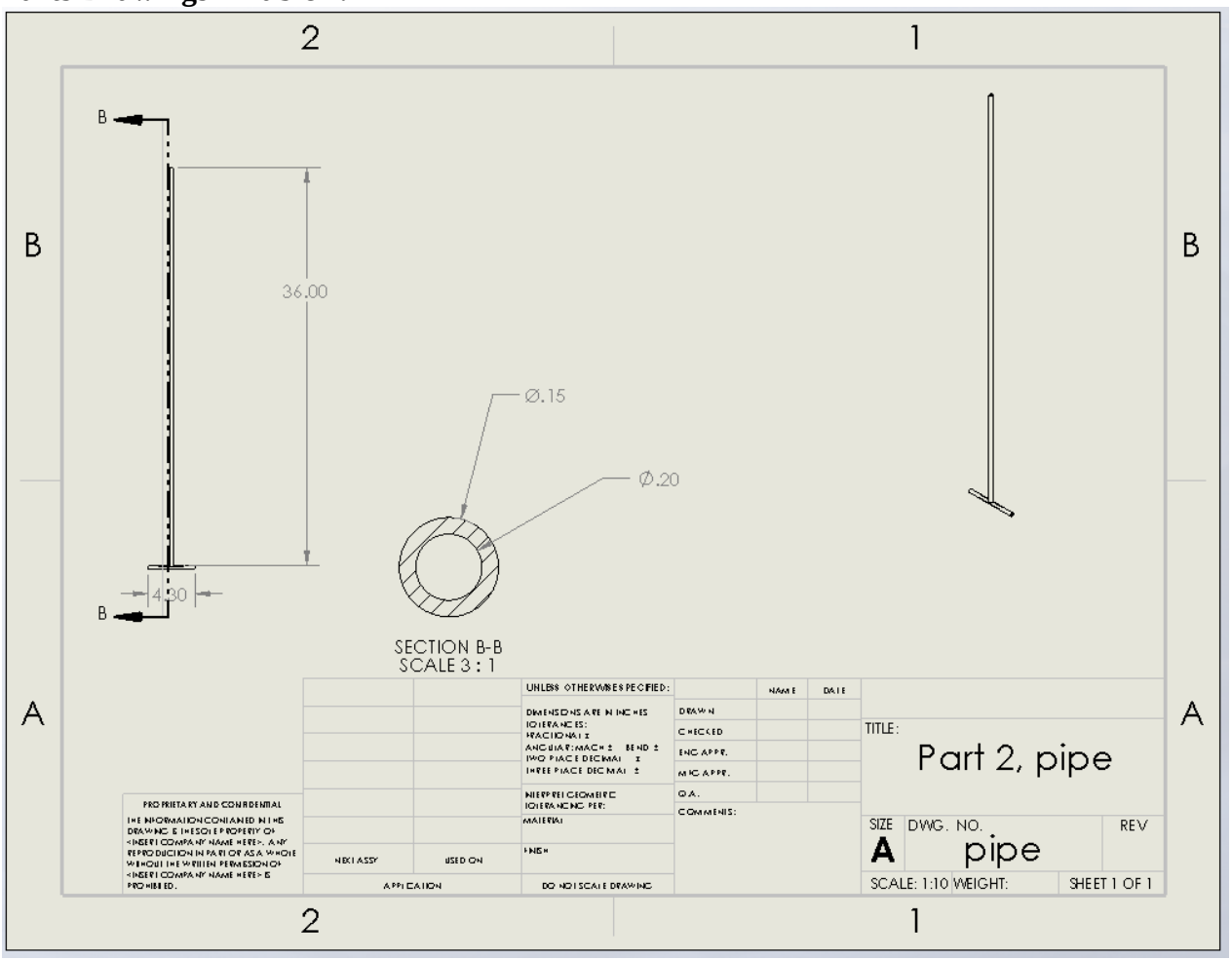

Table 4.2

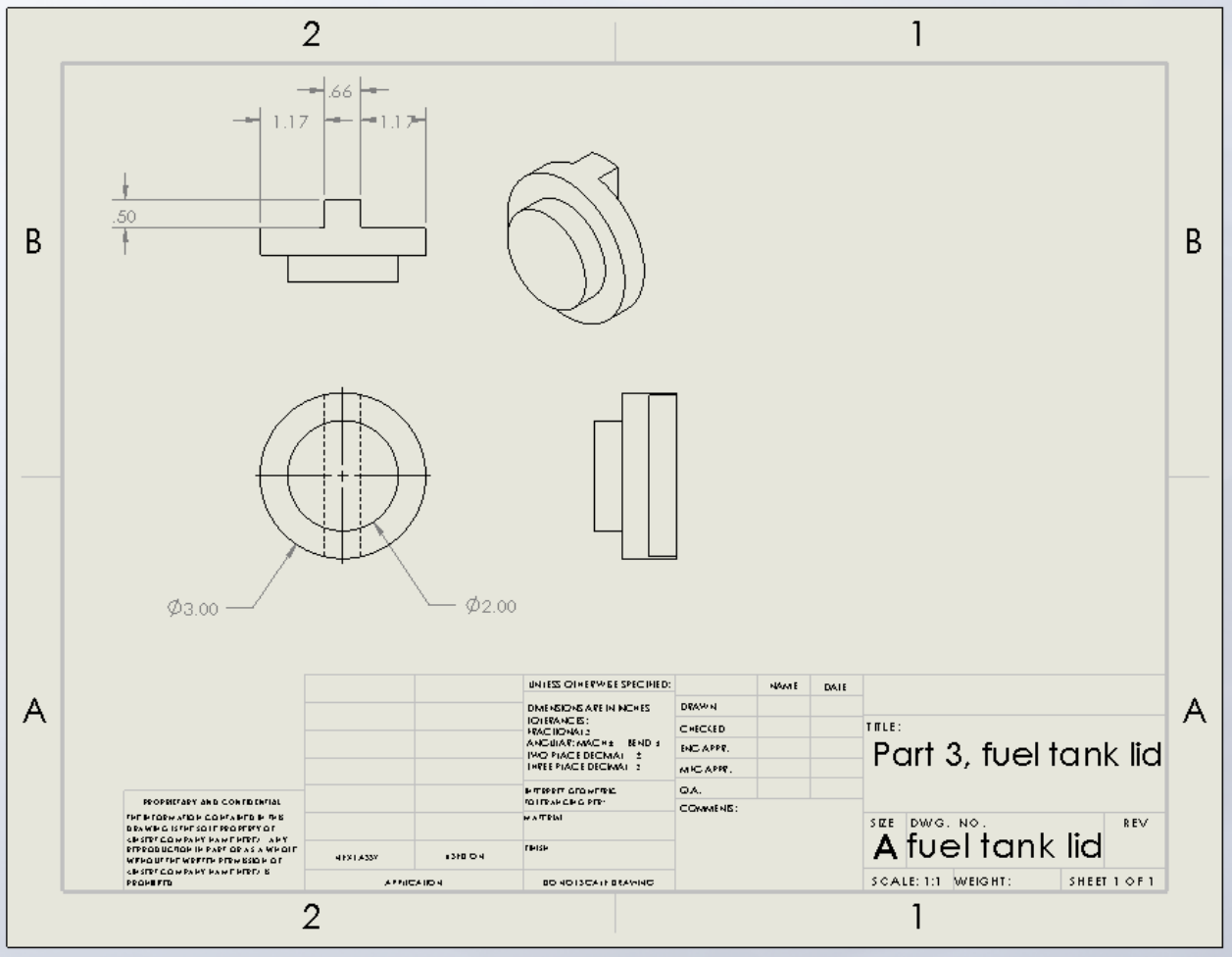
.66
1.17
1.17
.50
Ø3.00
Ø2.00
UNLESS OTHERWISE SPECIFIED:
DIMENSIONS ARE IN INCHES
TOLERANCES:
FRACTIONAL ±
ANGULAR: MACH ± BEND ±
TWO PLACE DECIMAL ±
THREE PLACE DECIMAL ±
INTERPRET GEOMETRIC
TOLERANCING PER:
MATERIAL
FINISH
DO NOT SCALE DRAWING
NEXT ASSY
USED ON
APPLICATION
NAME
DATE
DRAWN
CHECKED
ENG APPR.
MFG APPR.
Q.A.
COMMENTS:
TITLE:
Part 3, fuel tank lid
SIZE
DWG. NO.
REV
A fuel tank lid
SCALE: 1:1
WEIGHT:
SHEET 1 OF 1
PROPRIETARY AND CONFIDENTIAL

Table 4.3

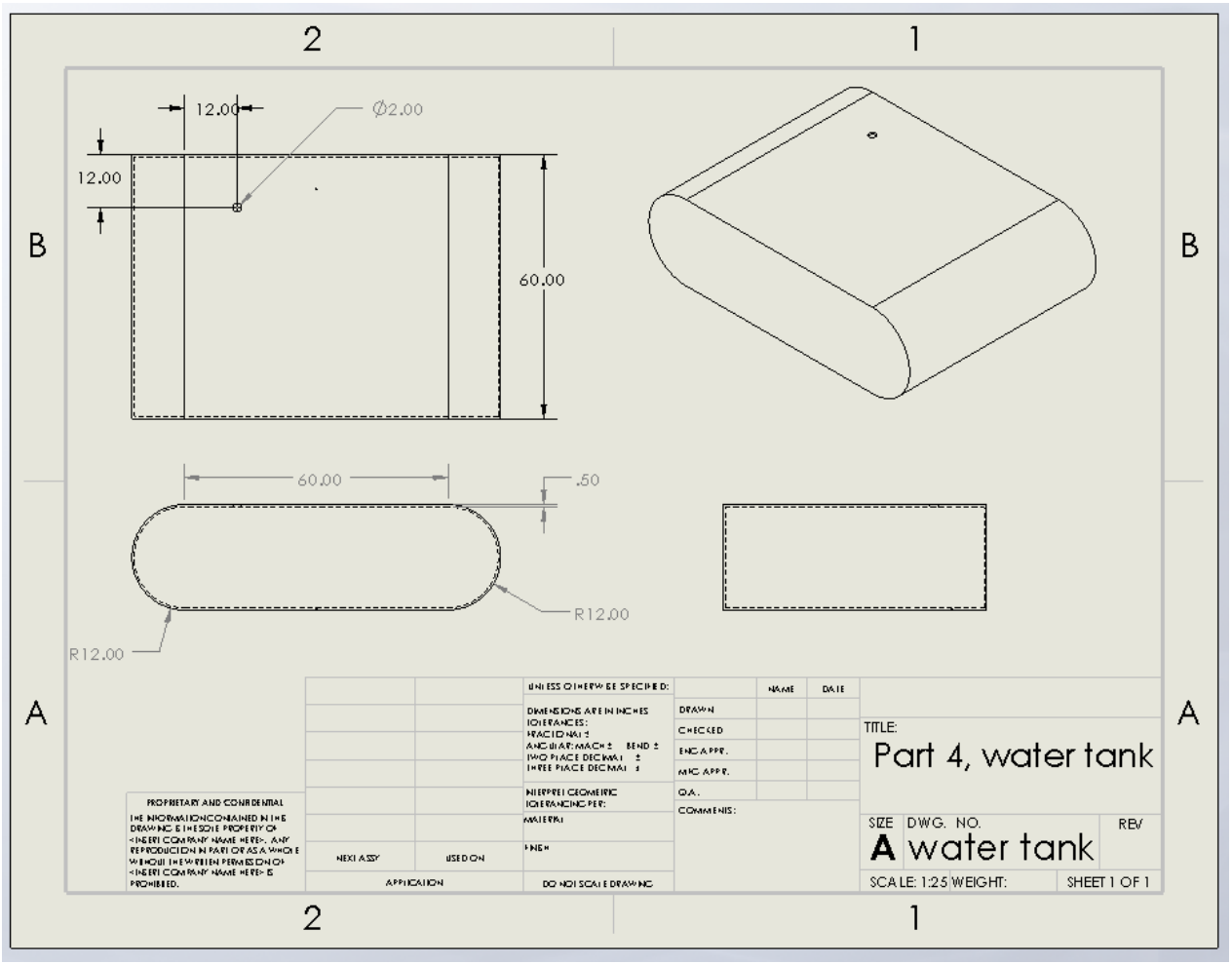

Analysis

B20 (20% biodiesel and 80% petroleum diesel), a widely adopted biofuel, is the same price as diesel right now and the current locomotive engines do not need modification for changing fuel to B20. There are plenty of sources of B20 fuel on the west coast that can provide B20 at the train stations. More importantly, the output energy difference between B20 and diesel is only 1-2% which can be neglected. In the long run, with improvement of technology of biofuel production and increase demand of biofuels, the price of biofuels will decrease while fossil fuel price rise due to overexploitation. B20 probably will provide economical benefits in the future even though it is

currently the same as diesel cost wise. B20 can reduce air toxins. For example, PM, CO, and others are reduced 12% to 20%. The only problem is that it will slightly increases NOx by 2%.

The water (steam)/methanol injections system can reduce NO_x by 23% and reduce PM by 12%. It will increase combustion efficiency with methanol and condensed air. The water can be a cleaning agent and clean carbon in the combustion chamber. It can not only extend engine life, but it also can increase combustion rate. This system is fairly simple and easy to add on to current engines and the water storage tank can be fit in the area above the engine. In addition, the computer system needs to be adjusted for the timing of water (steam)/methanol injection. The overall cost for adding water (steam)/methanol system initially to an engine is low and this system will decrease emissions without the need for after treatment, which would cost more than the water (steam)/methanol system.

This engine system's goal is to reduce emission will maintain the freight shipping capacities. It needs to be refill the fuel as normal train but instead, it needs to be filled with B20. In addition, the water tank needs to be filled with water and methanol mix (50% and 50%). B20 and water/methanol is flammable so that the station can't have fire source and static. B20 is volatile and explosive and needs to be treated carefully.

Growing corn and other plants can produce biofuel and then burn the fuel to provide energy. This carbon cycle reduces the addition carbon dioxide to atmosphere compare to fossil fuel. Biofuel can be carbon neutral but 100% biodiesel is not commonly adopted currently. If the production of biofuel is using renewable energy, it will be considered as clean energy.

Summary and Conclusion

In conclusion, the model presented will be cost efficient and effective to reduce NO_x emissions with a low cost to implement. This model will be implemented and the current Tier 2 fleet of locomotives will be sold and scrapped to buy Tier 4 locomotives two at a time over an eight-year span. This model will reduce NO_x emissions more and more each year with new Tier 4 locomotives are introduced into the fleet. The water injection model has a low cost to produce and will be add on to existing engines. The switch to B20 biodiesel will be implemented immediately and will not require any extra expenditure.

PowerPoint Slides

PennState College of Engineering

TRANSPORTATION AND REDUCING EMISSIONS

ENGINEERING DESIGN 100, SECTION 009, TEAM 8

HANK HALY, STEPHEN HERRICK, STEVEN MIN, MICHAEL TRUONG, RUIYE YAO

PROBLEM STATEMENT

Freight and mineral transportation have large amounts of emission every day and add up annually. New EPA requirements have been implemented and older engines have to meet those new requirements. Also, new methods have to be implemented to reduce emission and smog from NO_x while still meeting EPA guidelines and being budget friendly.

MISSION STATEMENT

This model will aim to reduce emissions without sacrificing efficiency and power. Also, the model will aim to be budget friendly over a span of a number of years. The distance between Los Angeles, CA and Seattle, WA ports will be used.

REPLACING DIESEL FUEL WITH B20 BIODIESEL

- 20% biodiesel, 80% petroleum diesel
- Does not need any engine modification
- Cleaner engine
- Air toxics are reduced 12% to 20%
- Mutagenicity is reduced by 20%
- Virtually no change in energy per gallon - 1% to -2%
- Widely adopted

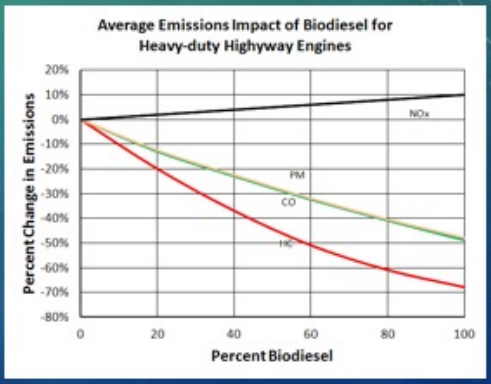

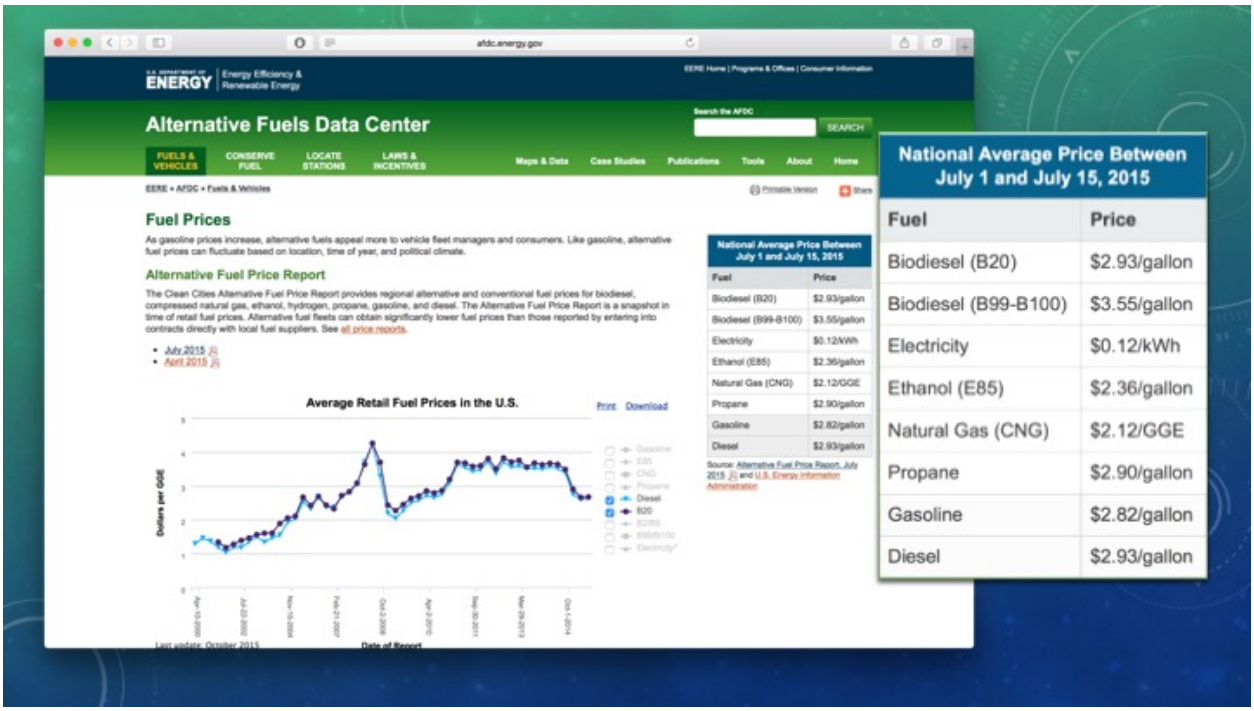

WATER/STEAM INJECTION ATTACHMENT

The water injection system strategically inputs water into the combustion chamber to lower the temperature. This lower temperature will still be enough to burn the biodiesel but will reduce NO_X formation and emission.

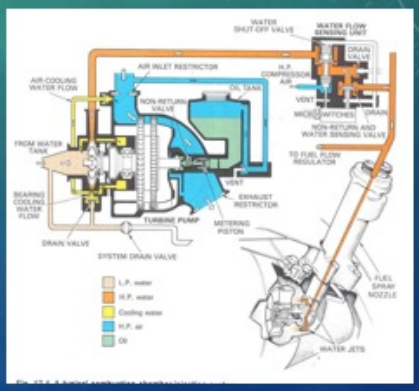

- 50/50 water and alcohol
- Increases the rate of combustion
- Absorbs heat due to high heat capacity
- Alcohol acts as an antifreeze and is combustible
- After combustion, the steam also acts as a cleaning agent by removing carbon buildup inside the engine.

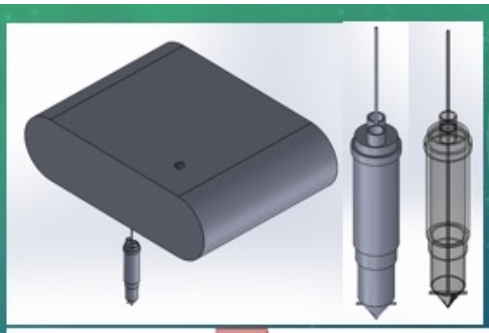

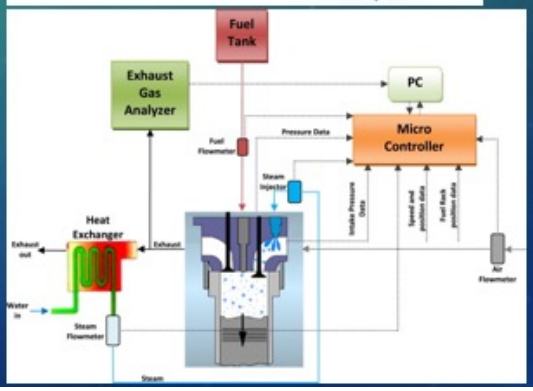

EMISSION REDUCTIONS

	Reduction	Original Annually (tonnes)	Ten Years (tonnes)	After Reduction (tonnes)
NO_x	-23%	2304	23040	17740.8
Particulates	-12%	83.4	834	733.92

PROPOSED SOLUTION

To cut emissions efficiently and to adhere to a budget, it is proposed that the client begin with implementing a water injection system into the Tier II engines to cut the NO_x emission from the change of fuel as well as NO_x emissions from the engine itself. It is also proposed that the client transition from diesel fuel to biodiesel fuel (B20) since emissions will be cut without sacrificing energy per gallon. Over a 8-year span, two locomotives will be sold and scrapped and two Tier IV locomotives should be bought to replace them and will further reduce emissions. The new engines will reduce NO_x by another 76% and particulates by an average of an additional 85% per locomotive upgraded.

QUESTIONS

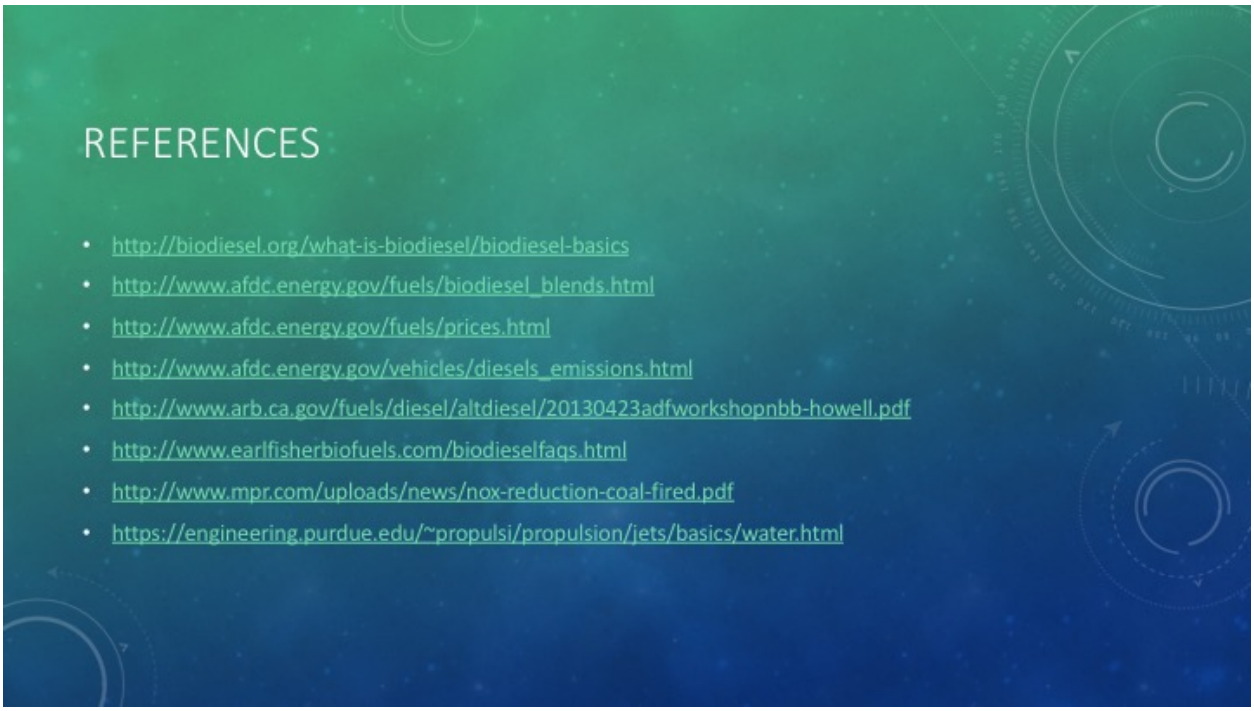

References

- http://biodiesel.org/what-is-biodiesel/biodiesel-basics
- http://www.afdc.energy.gov/fuels/biodiesel_blends.html
- http://www.afdc.energy.gov/fuels/prices.html
- http://www.afdc.energy.gov/vehicles/diesels_emissions.html
- http://www.arb.ca.gov/fuels/diesel/altdiesel/20130423adfworkshopnbb-howell.pdf
- http://www.earlfisherbiofuels.com/biodieselfaqs.html
- http://www.mpr.com/uploads/news/nox-reduction-coal-fired.pdf
- https://engineering.purdue.edu/~propulsi/propulsion/jets/basics/water.html