http://www.personal.psu.edu/res5466/my_web_page.html

EDSGN 100 Design Project 2
Section 010 Team 8. 15 Dec. 2013
Submitted to: Xinli Wu

A Better Pizza Box

Thomas Strnad Ross Sherrer Federico Daunert William Haunstein

http://www.personal.psu.edu/res5466/my_web_page.html

Abstract:

In this report, you will find all pertinent information to Team 8's design project for Alcoa. It outlines our mission and problem statements and describes our design process with all related drawings. The report then ends with our analysis of the project and final remarks.

Table of Contents:

Cover Page……. (pg.1) William Haunstein

Abstract…….. (pg.2) William Haunstein

Table of Contents……... (pg.2) William Haunstein

Introduction…… (pg.3) William Haunstein

Problem Statement……. (pg.3) Thomas Strnad

Mission Statement……... (pg.3) Thomas Strnad

Design Specifications……...… (pg.3) Federico Daunert

Product Management (Gantt chart)……...…… (pg.4) Federico Daunert

Concept Generation…….. (pg.5) Group

Design Matrix…… (pg.6) Federico Daunert

Description of Best Design…… (pg.6) Ross Sherrer

Relative Design Drawings……. (pg.7) Ross Sherrer

Prototype Pictures (Scale)……. (pg.10) Group

Design Features…….. (pg.11) Ross Sherrer

Definition of sustainability…… (pg.12) Ross Sherrer

Rational for Product…….. (pg.12) Ross Sherrer

Engineering Analysis……. (pg.13) Thomas Strnad

Conclusion……..…… (pg.14) Ross Sherrer

Power Point (Attachment)……. (pg.14) Group

Trifold (Attachment)……... (pg.14) Ross Sherrer

http://www.personal.psu.edu/res5466/my_web_page.html

Introduction

This is Team 8's EDSGN 100 Second Design Project for the company Alcoa. The goal of this project was to discover a way to make Penn State and the Community more sustainable by introducing a new use of aluminum. Our team took some time to brainstorm common and widespread problems across campus and discovered that the mass amounts of wasted pizza boxes was an issue we could improve upon in this assignment. We then identified the specifications we would look for and began designing some basic concepts before narrowing them down to our final design. At this point we did a detailed CAD drawing before building the prototype. Our new pizza box utilized aluminum as the structure of the box utilizing its lightweight, thermal, and food safe properties. The box was then covered with insulating material and uses a zipper to open and close the box. Team 8 was very pleased with the result and with its presentation.

Problem Statement

The modern pizza box is neither reusable nor recyclable. In consequence it is one of the most wasted items commonly used today. The oil and grease from the pizza makes the cardboard pizza box impossible to recycle or reuse. A box made out of cardboard also fails to retain heat as well as many of the materials we have today.

Mission Statement

To design a reusable pizza box that is not only easy to use over and over, but also uses aluminum to maintain temperature and make it easy and safe to clean. This box could be used by businesses or consumers alike.

Design Specifications

In order to determine the best design from the drawing designs made by each of the group members, we had to rate them based on how well they met the determined criteria. The designs were rated following a list of criteria that we thought would meet the optimum target specifications: this includes recyclability, reusability, ease of use, portability. The best design ended up getting a rating of positive 4, but this design (Ross's Design) was also combined with Will's. The combination of both designs produced the final design which is the design we built as a prototype. When developing the pizza box, it was very important to have in mind that our pizza box shouldn't be something very complicated, so we had to keep it simple, and it should be eco-friendly. In order to achieve that, we thought of making a reusable and recyclable pizza box. In order to do that, we used aluminum foil and an actual plate of aluminum to keep the pizza warm inside the box. At the same time it was important for our pizza box to be easy to use and not heavy so that it could be easily to carry.

http://www.personal.psu.edu/res5466/my_web_page.html

Product Management (Gantt chart)

In order to manage our time well as to be more efficient when working, we developed a Gantt chart that would help us be prepared every day. The Gantt chart basically works as a visual calendar of how long we have been working on something and between what dates we have been working on it. The Gantt chart we used during the time we worked on our project can be seen in the image down below.

FIG. 1. Gantt chart

http://www.personal.psu.edu/res5466/my_web_page.html

Concept Generation

These four sketches represent different concepts that were generated.

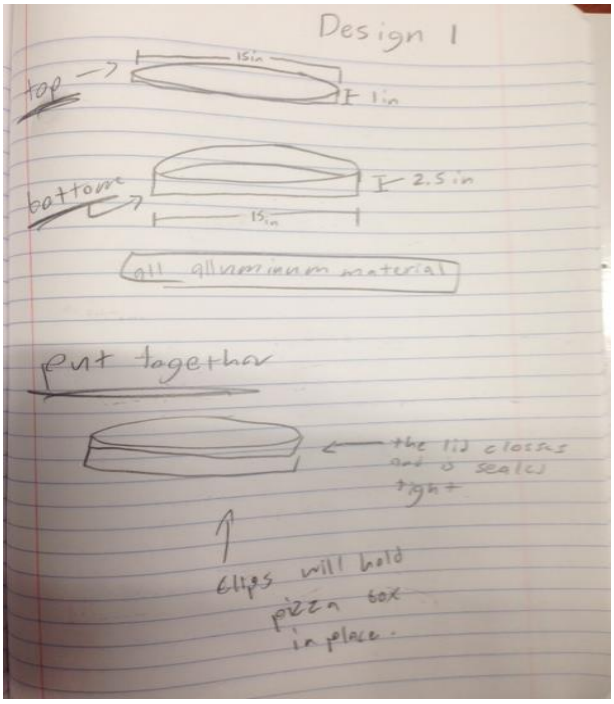

FIG. 2. Concept Sketch 1

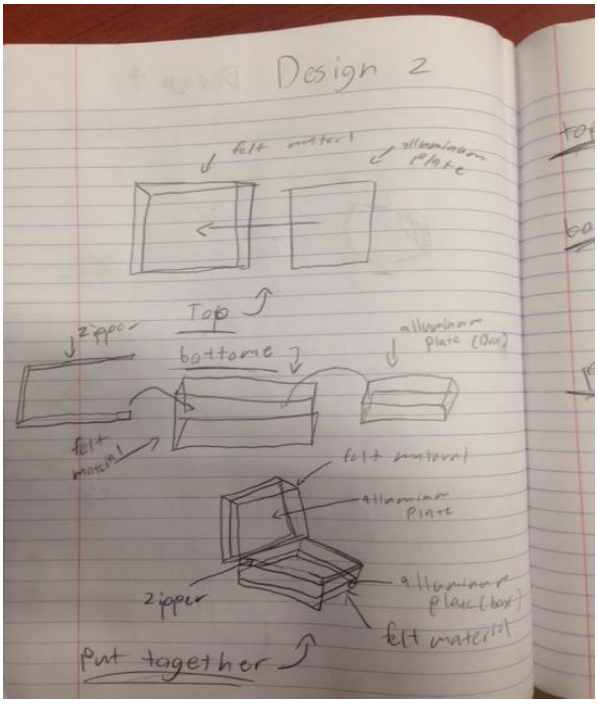

FIG. 3. Concept Sketch 2

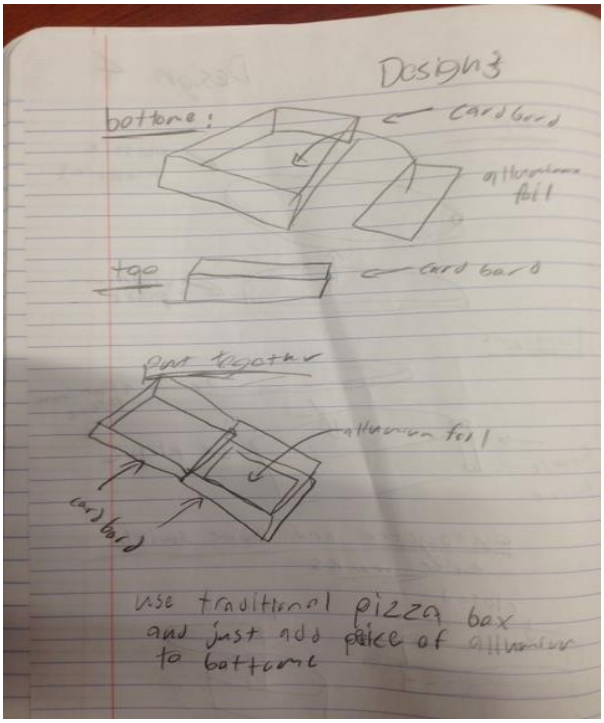

FIG. 4. Concept Sketch 3

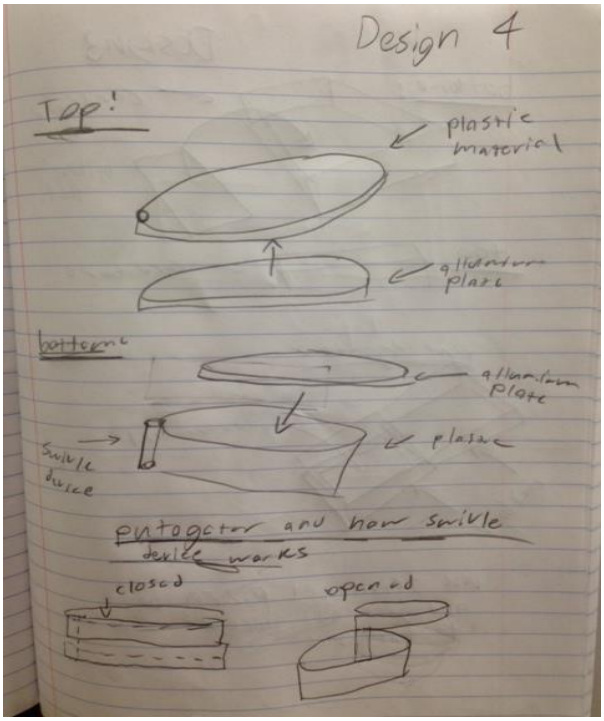

FIG. 5. Concept Sketch 4

http://www.personal.psu.edu/res5466/my_web_page.html

Design Matrix

Selection Criteria	Designs			
	Federico's Design	**Ross' Design**	**Will's Design**	**Tom's Design**
Ease of use	0	0	+	-
Durability	+	+	0	0
Ease of manufacture	0	+	-	+
Recyclable	-	+	+	-
Reusable	0	+	+	+
Cost	+	-	+	+
Portability	+	+	0	+
Sum of +'s	3	5	4	4
Sum of –'s	1	1	1	2
Sum of 0's	3	1	2	1
Net Score	2	4	3	2
Continue?	No	**Combine**	**Combine**	No

Table. 1. Design Matrix

Description of Best Design

The Best design is a combination of Ross's and Will's designs (FIG.3. and FIG.4, respectively). These designs combined take the best of both parts to create a truly Better Pizza Box. The best design will be composed of an inner and outer later. The outer layer will be of thermal mesh to keep the pizza warm during transportation. The inner layer will be of aluminum. This material will be utilized for its heat conductive attributes and its oil resistant natural coating (easy to wash). The Better Pizza Box will be fitted with a zipper on the outside middle of the pizza box. This will maximize the security of the pizza during transportation (will not fall out).

http://www.personal.psu.edu/res5466/my_web_page.html

Relative Design Drawings

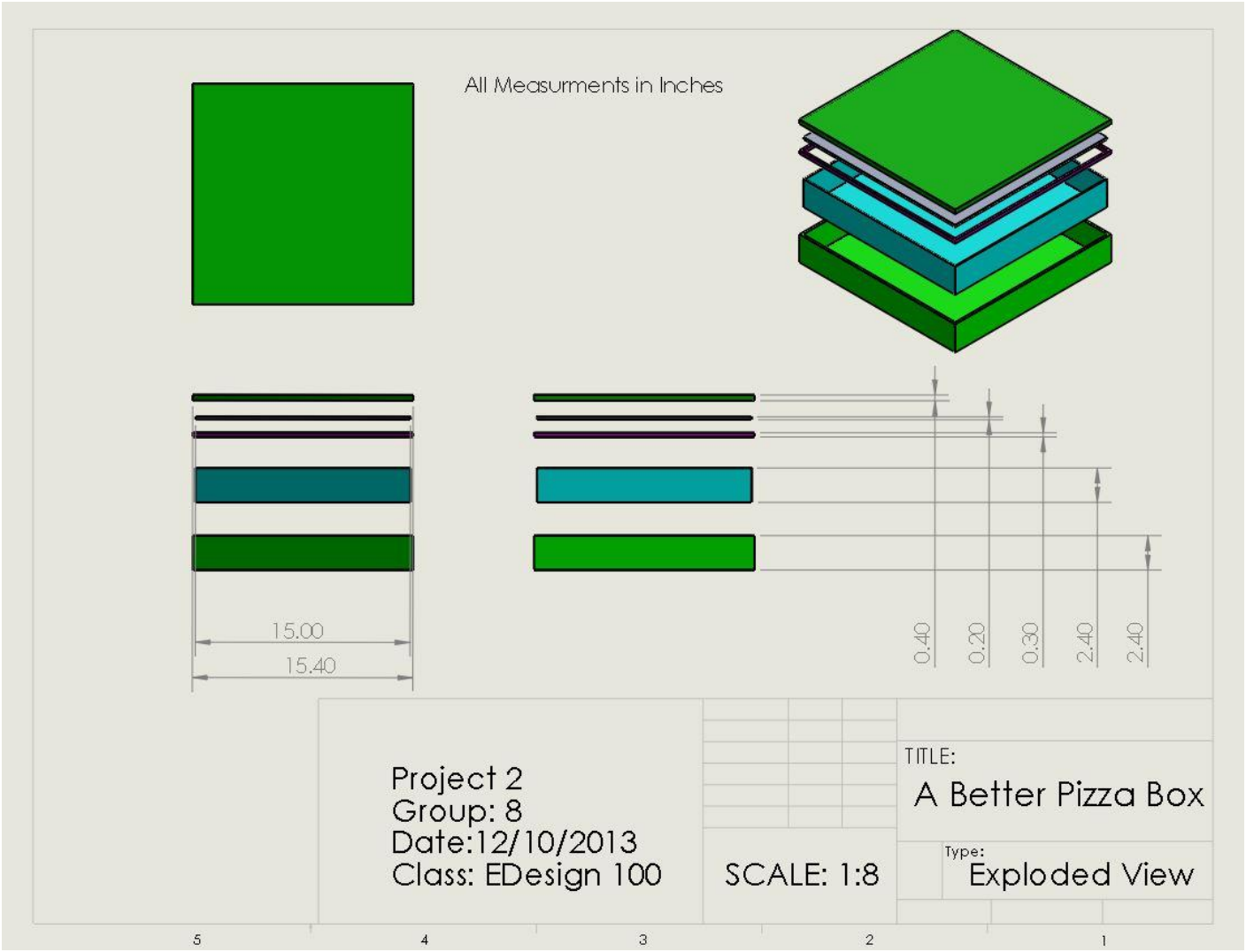

FIG. 5. Exploded View (With Dimensions)

http://www.personal.psu.edu/res5466/my_web_page.html

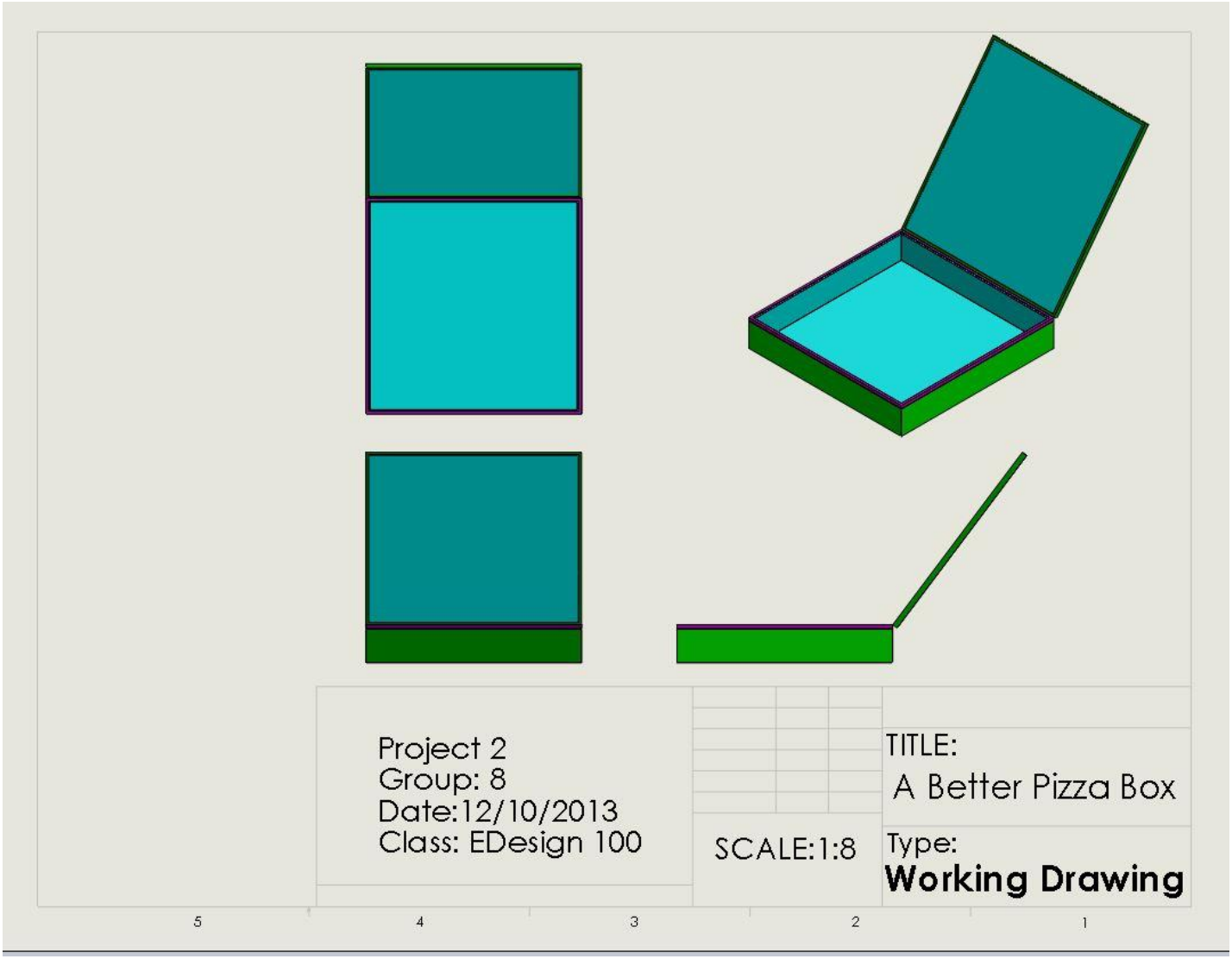

FIG. 6. Working Drawing

http://www.personal.psu.edu/res5466/my_web_page.html

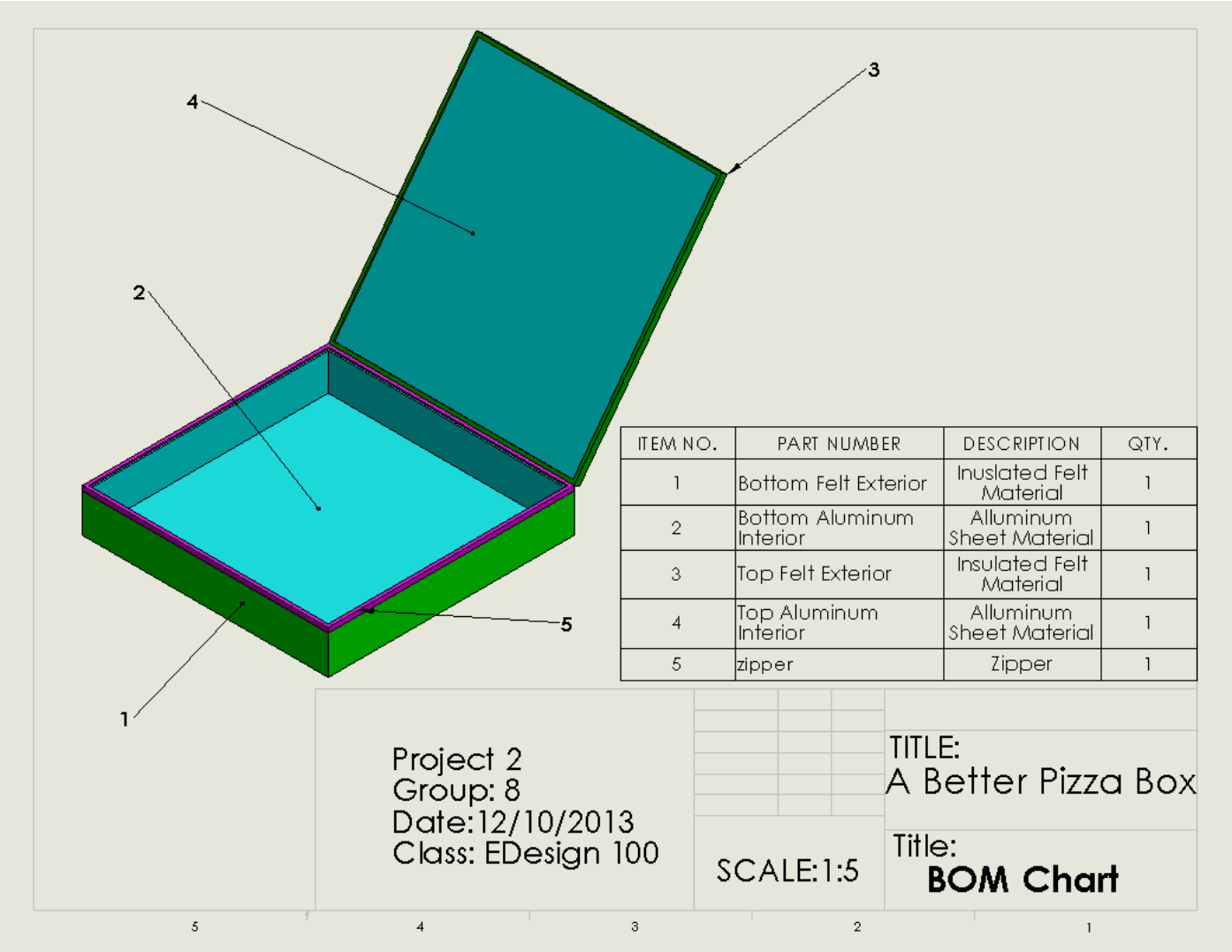

ITEM NO.	PART NUMBER	DESCRIPTION	QTY.
1	Bottom Felt Exterior	Inuslated Felt Material	1
2	Bottom Aluminum Interior	Alluminum Sheet Material	1
3	Top Felt Exterior	Insulated Felt Material	1
4	Top Aluminum Interior	Alluminum Sheet Material	1
5	zipper	Zipper	1

FIG. 7. Bill of Materials

http://www.personal.psu.edu/res5466/my_web_page.html

Prototype Pictures (Scale)

FIG. 8. Prototype (partially open)

FIG. 9. Prototype (open)

Scale of Prototype: 1:1

http://www.personal.psu.edu/res5466/my_web_page.html

Design Features

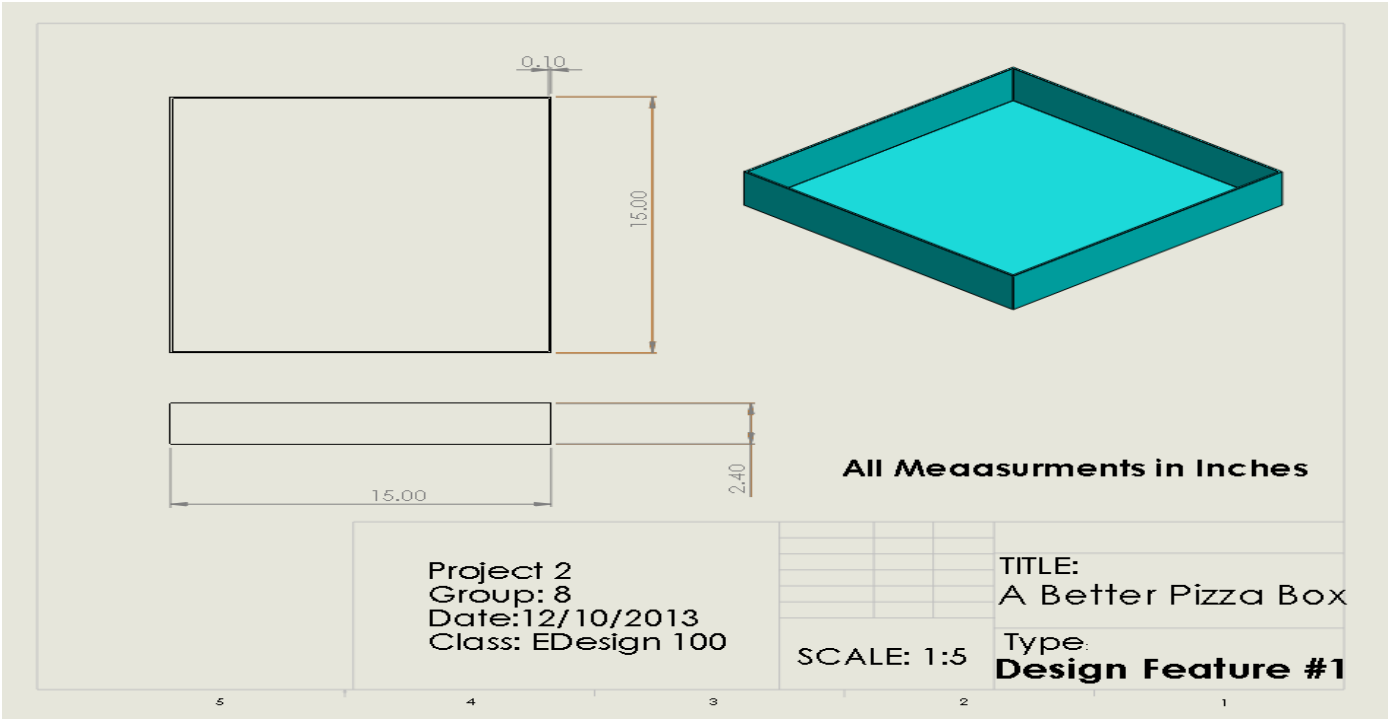

FIG. 9. Design Feature (Bottom Aluminum Interior)

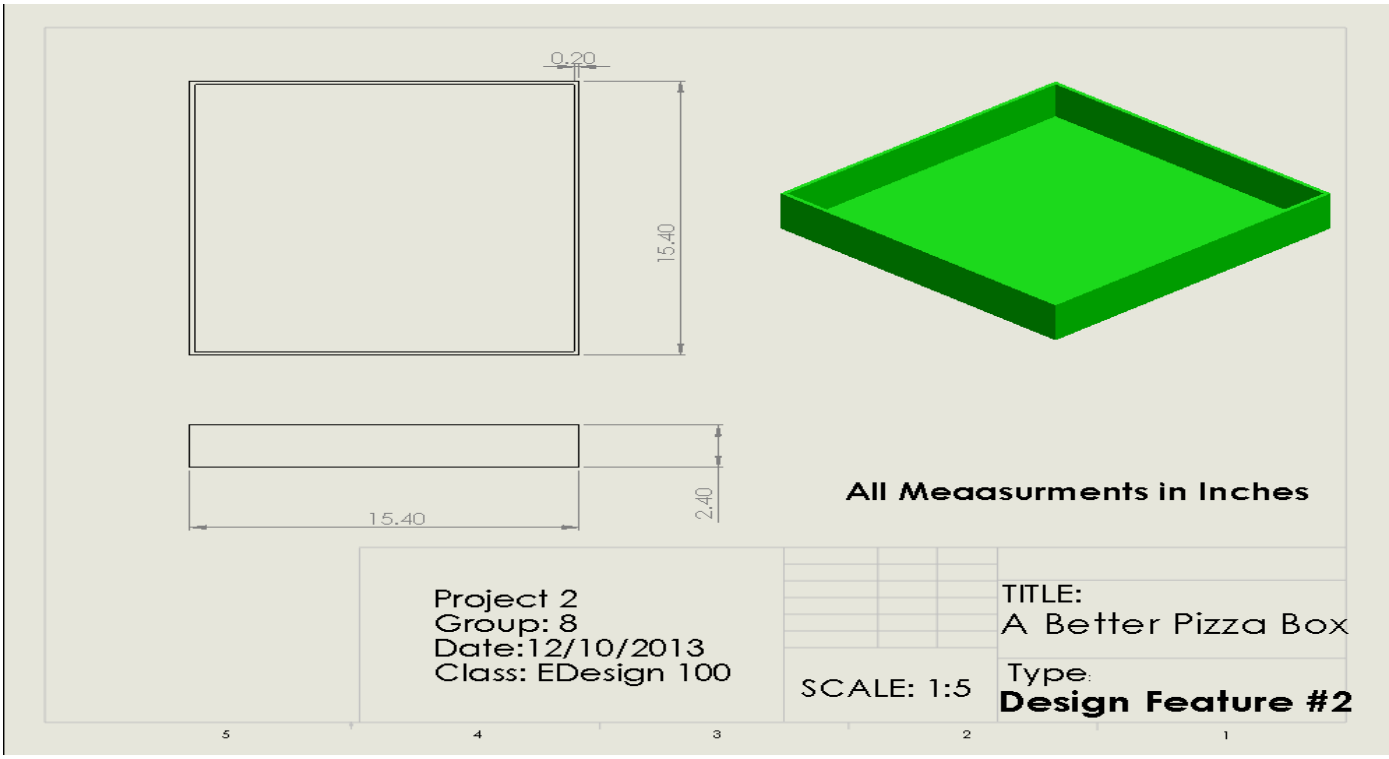

FIG. 10. Design Feature (Bottom Felt exterior)

http://www.personal.psu.edu/res5466/my_web_page.html

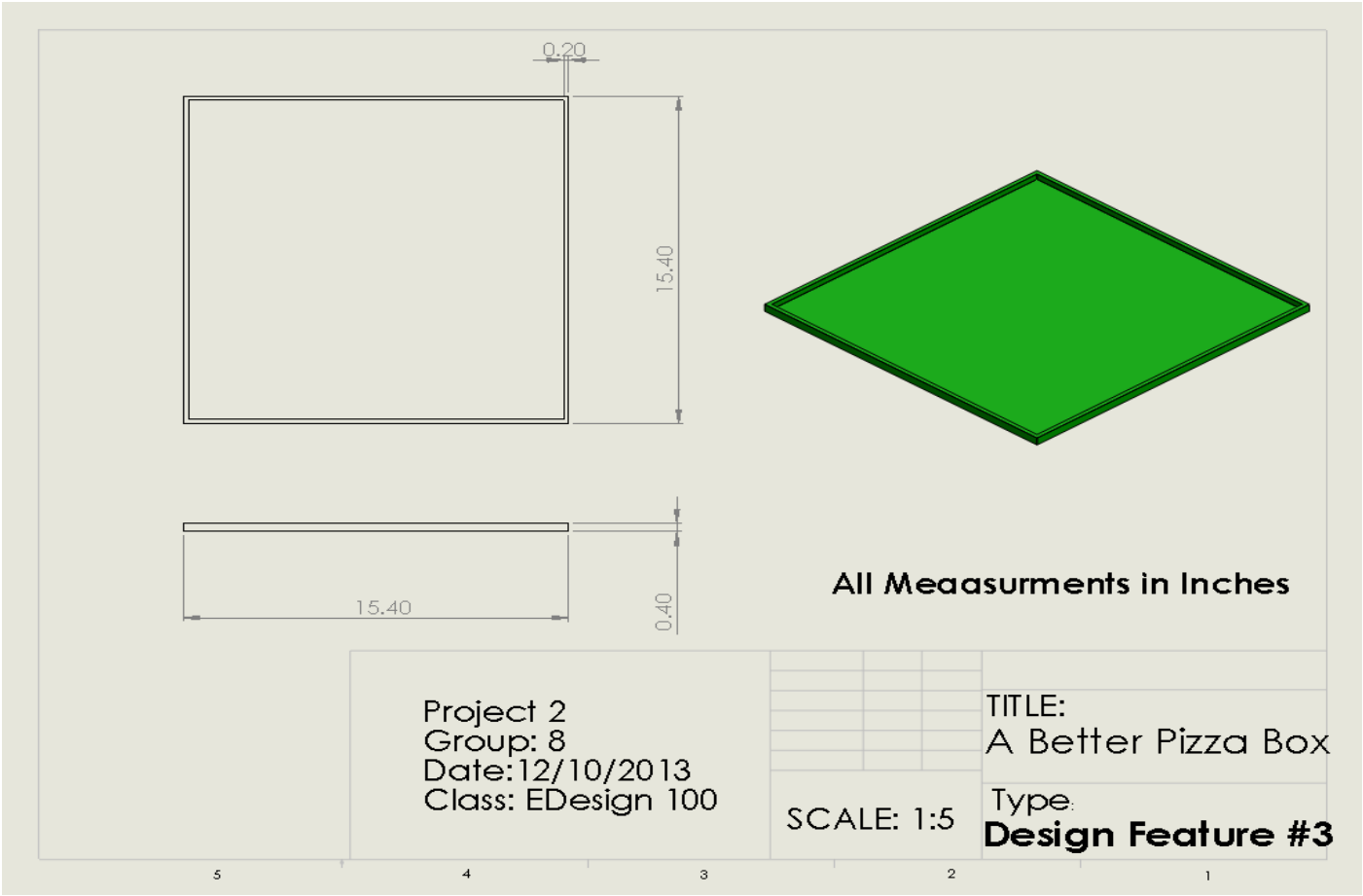

FIG. 11. Design Feature (Top Felt Exterior)

Sustainability Definition

A statement of longevity in survival through means of maximizing efficiency, while minimizing recourse cost.

Rational for Product

Throughout the vicinity of Penn State there are multiple pizzerias. Those pizzerias generate waste via pizza box. But how much waste really is generated by just a few companies? Well, from just 10 pizzerias (within a mile radius of Penn State Campus) can generate up to 31 Tons of waste a year (200,000 pizza boxes). But without solution of the Better Pizza Box we could bring this number down to about 0. This is because even after it has been maximized for its use all the materials will be able to be recycled. Our box will just not fix the problem of waste on campus but, also reduce it to virtually nothing, which in long term will help progress sustainability on Penn State Campus. (*Pizza Box Statistic*, http://pizza.com/fun-facts)

http://www.personal.psu.edu/res5466/my_web_page.html

Engineering Analysis

Working Mechanism:

Zipper

To enable you to open and close the box when needed there is a zipper running along the perimeter of the top of the box. The zipper works by running a slide across a series of teeth that lock together naturally unless the slide separates them. The zipper has a stop at each end so it will not run off track.

Opening Top

The Top of the box can be opened and closed on a simple axis. This is accomplished simply because the top of the box is bound on only one side thus it is able to be opened and closed like an alligator's mouth.

Cost Analysis:

(All dimensions in inches)

Part	Dimension	Material
Aluminum Base Plate	15x15x.4	Aluminum
4x Aluminum interior (sides)	2.4x15x.3	Aluminum
Aluminum interior (top)	15x15x.3	Aluminum
4x Felt Exterior (sides)	2.4x15.4x.2	Insulated Felt
2x Felt Exterior (top/bottom)	15.4x15.4x.2	Insulated Felt
Zipper	46.2in	Zipper

Table. 2. Cost Analysis

Total Aluminum needed: 200.7in squared

Total Insulated Felt needed: 124.432 in squared

Prices taken from:

http://www.metalsdepot.com

-$20,880 for 4'x8'x8' ($.047/square inch)

http://www.personal.psu.edu/res5466/my_web_page.html

http://www.fabricdepot.com

-$4.90 for 72”x72” ($.068/square inch)

http://www.voguefabricsstore.com

-$7.00 for a bag of 50 zippers with an average length of 14.5” ($.0096/inch)

Cost Breakdown

Aluminum_____$9.433

Insulated Felt_____$8.45

Zipper_____$.446

Total per Box: $18.32

Conclusion:

The definition of sustainability is “A statement of longevity in survival through means of maximizing efficiency, while minimizing recourse cost” and our project fits that statement perfectly. By creating a Better Pizza Box to replace the traditional pizza box the Penn State campus would be taking advantage of reusable aspect as well as the recyclable aspect (Both aspects that the traditional pizza box do not have). By taking advantage of such an innovative product for all pizzerias on campus Penn State will be able to shed off the tons of waste produced by traditional pizza boxes. This will digress the buildup in Penn States landfills and ultimately progress longevity for the campus. Choosing a Better Pizza Box is just not a better way to transport pizza but, also better way to make Penn State a more sustainable campus.

Power Point (Click)

Trifold (Click)