http://www.personal.psu.edu/wvh5107/DESIGN%20PROJECT%201.pdf

EDSGN 100 Design Project #1

Section 010. Team 8

Submitted to: Xinli Wu

Tres Rotula Shaggin Wagon

28 Oct. 2013

Submitted By:

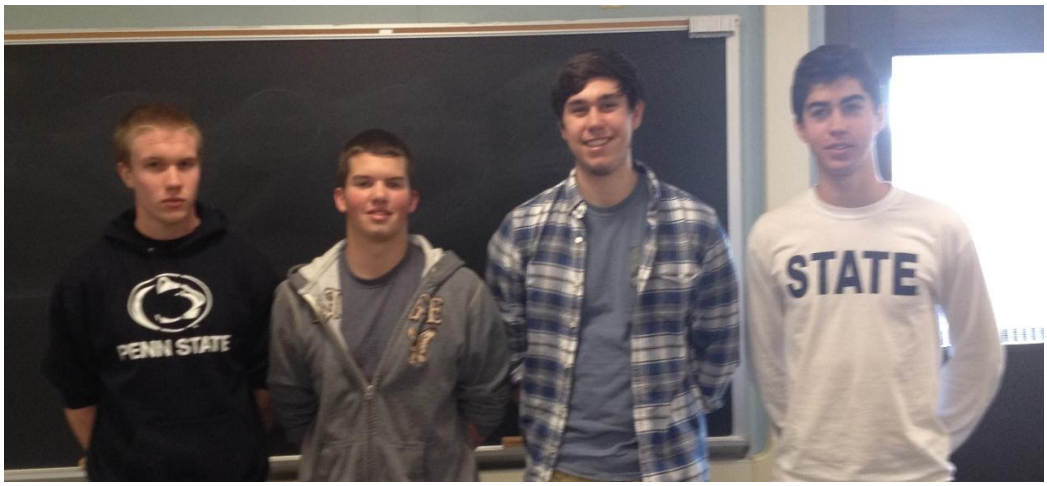

Thomas Strnad William Haunstein Ross Sherrer Federico Daunert

http://www.personal.psu.edu/wvh5107/DESIGN%20PROJECT%201.pdf

Abstract: This report will cover the design project of a folding shopping cart for EDSGN 100. In it you will find the team's designs process, sketches and/or drawings, and a conclusion for the project as a whole. The project addresses the new problem of people having difficulty shopping and a new age solution to it.

Table of Contents:

Cover Page ..... 1 William Haunstein

Abstract ..... 2 William Haunstein

Table of Contents ..... 2 William Haunstein

Introduction ..... 3 William Haunstein

Problem Statement ..... 3 William Haunstein

Mission Statement ..... 3 William Haunstein

Design Specifications ..... 3 William Haunstein

Customer Needs Assessment..... 4 Federico Daunert

Concept Generation ..... 5 Federico Daunert

Design Selection Matrix ..... 6 Federico Daunert

Gantt Chart..... 6 Federico Daunert

Design Drawings..... 7 Ross Sherrer

Working Systems.....14 Thomas Strnad

Operating Instructions..... 15 Thomas Strnad

Cost Analysis..... 16 Thomas Strnad

Conclusion..... 18 Ross Sherrer

Introduction: This design project was the first for team #8 in EDSGN 100 Sec. 010. We began this project by initial learning the design method and how to approach engineering tasks. We first analyzed the problem and goal for the task before gathering research and customer based information in order to solve the problem. Next, we brainstormed different ideas to solve the issue, in this project the goal was to design a new shopping cart that will be discussed more later in the report. After coming up with numerous designs concepts we used a matrix to select the best idea, combined the best with attributes of the others to finalize our idea for the project. Next came the actual design portion. We drew out sketches first before getting serious and starting to finalize the design with dimensions and working mechanisms. The final step was to construct a working prototype, this was the most challenge portion for our team but we managed to get a model we were proud of and that functions properly. The following report details that above mentions steps for the design project.

Problem Statement: Increasing numbers of people are having difficulties shopping due to the lack of a car or the ability to shop with ease because of long arduous distances with heavy items. These same people may benefit from a new method of transporting their groceries with a new style of shopping cart.

Mission Statement: To design a new shopping cart with the ability to fold into a comparably smaller size for people without cars or those who must carry groceries exceedingly long distances, that also fits the following design specifications

Design Specifications:

1. The folding shopping cart should be easy to use (and assemble, if required).
2. The folding shopping cart should be ideal for transporting groceries and some other materials.
3. The folding shopping cart should fold compactly for easy storage.
4. The material cost for the folding shopping cart should not exceed $50 unless it can be justified.
5. The folding shopping cart should have a weight capacity of 100 lbs.

http://www.personal.psu.edu/wvh5107/DESIGN%20PROJECT%201.pdf

Customer Needs Assessment

Right before starting to develop a possible design for the shopping cart, we first had to think of all the possible customer needs. Customer needs basically involves all type of specs a possible customer would like. We headed to the streets and decided to ask people around what an ideal shopping cart should have incorporated. The team realized that the price range was one of the most important factors for most of customers. The price is always one of the biggest issues because people want to spend money on something worth it, on something that pays back with time. This is the main reason why we tried to keep the price under $50.

Based on the design specifications, our shopping cart had to be able to fold. The people we interviewed would basically say that the most important thing about a folding cart would be the easiness of folding and that it ends up folding into something small and easy carry. On the other hand, once the cart was unfolded, it should be ideal to carry groceries. One last request that we got for the shopping cart, was that it should be able to carry a certain amount of weight. We decided that 100lbs would be a good weight limit for our shopping cart. One last thing we realized is that the people we asked questions about the shopping cart, were people from all ages and heights. This made us think that the shopping cart should be a product for everybody and so we had to make it adaptable to any type of customer. As a result we ended up measuring an average height for the customers and making a handle to this determined distance from the ground. Once we compiled and evaluated all the customer needs for the shopping cart, we were ready to start thinking about how the design was going to look.

http://www.personal.psu.edu/wvh5107/DESIGN%20PROJECT%201.pdf

Concept Generation

The concept generation was an easy but at the same time hard part of the project. It was easy because we didn't actually have to brainstorm about what should be implemented in the cart due to the fact that we already did that by completing the customer needs. However, it was also hard because there were many customer needs to add in the cart. In order to find the best design, we decided to each make a sketch of what we thought would be the ideal shopping cart. Once we finished, we compared our designs and we started debating about the good and bad ideas of each of the drawings. At this point, it was really difficult to keep track of all the designs each of us had and this is when we first developed a matrix.

The design matrix would basically compare and decide which of the designs we drew would be the most similar to the final design. In order to decide what the best design would be, we had to look at how each of the designs tackled the customer needs. Once the matrix was finished, our ideas of how the final design would look like were much clear. We decided that none of our designs would be used as the final one but instead we took Will's design as the reference one and then we tried to combine it with specific specifications from the rest of designs in order to get an improved version of Will's sketch. The result was very successful. We ended up getting a cart that is able to fold into a plane base and unfold into a standard height shopping cart. One of the best things about our success is that we tried to keep it simple, innovative and most important, efficient.

http://www.personal.psu.edu/wvh5107/DESIGN%20PROJECT%201.pdf

Design Selection Matrix

Selection Criteria	Concepts			
	Federico's Design	**Ross' Design**	**Tom's Design**	**Will's design**
Ease of handling	+	-	-	-
Ease of use	0	+	+	0
Readability of settings	-	+	0	+
Durability	-	-	+	+
Ease of manufacture	0	-	0	0
Portability	+	-	-	+
Folding easiness	+	0	+	+
Sum +'s	3	2	3	4
Sum 0's	2	1	2	2
Sum –'s	2	4	2	1
Net Score	+1	-1	+1	+3
Rank				
Continue?	**Combine**	No	**Combine**	**Yes**

Project – Management Gantt Chart

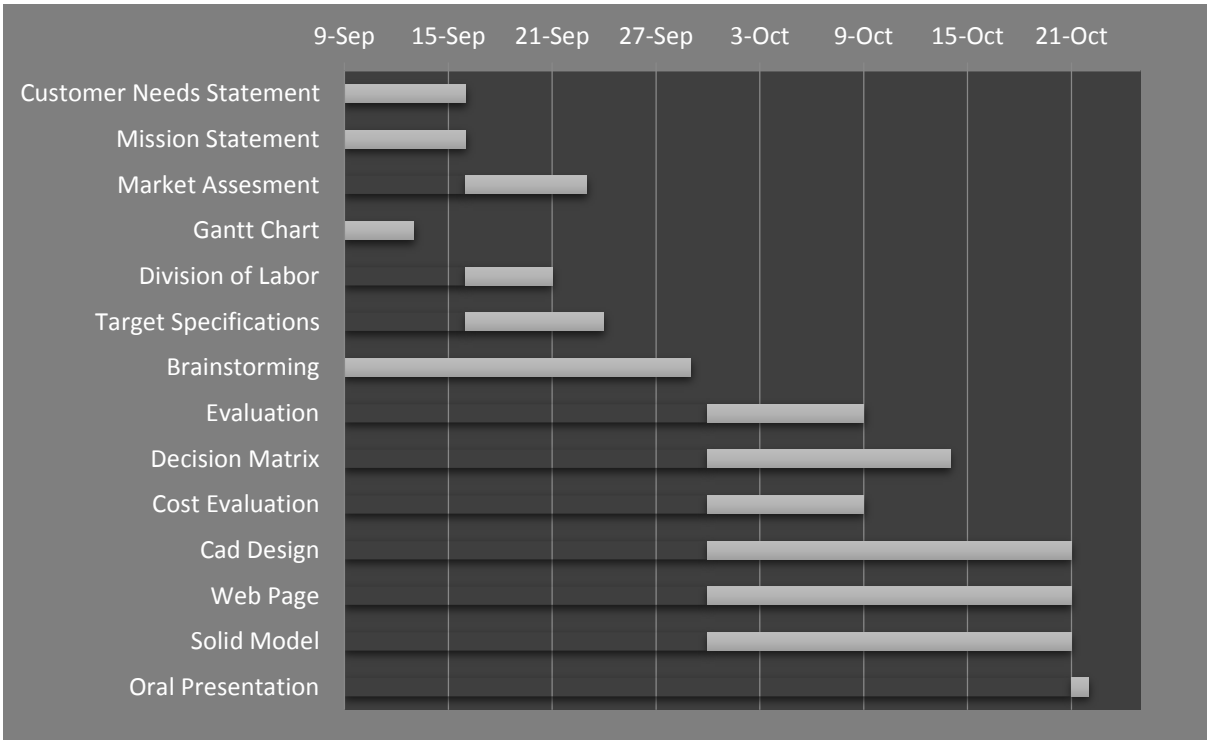

http://www.personal.psu.edu/wvh5107/DESIGN%20PROJECT%201.pdf

Design Drawings: (solidworks)

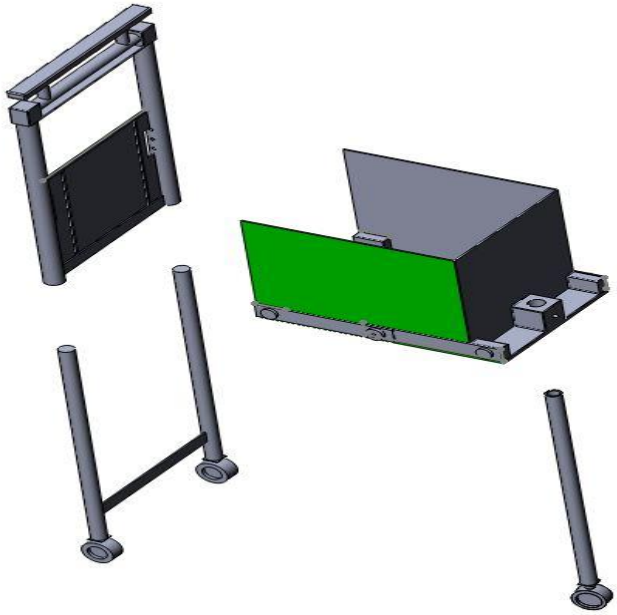

Basket drawings and Dimensions:

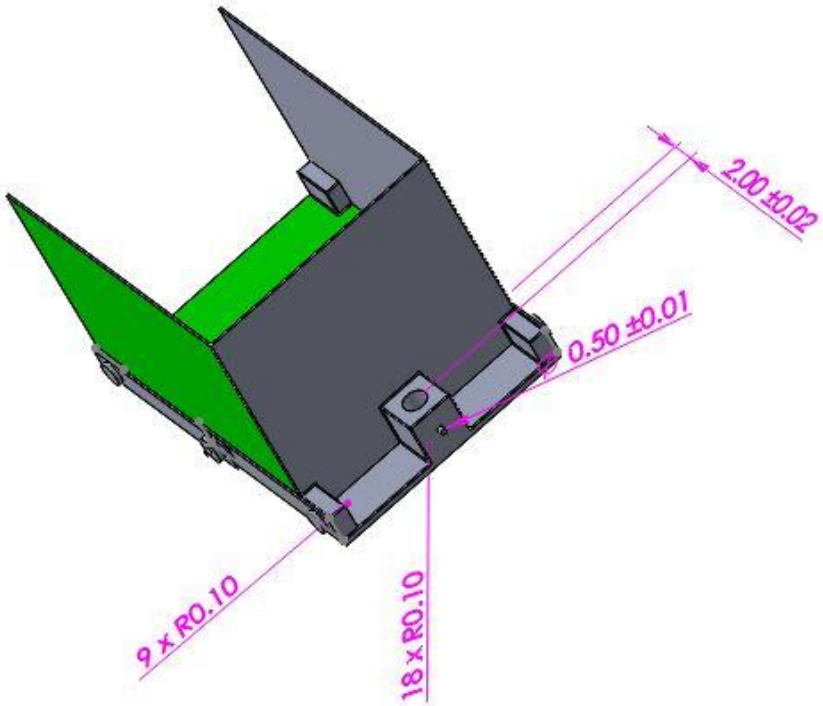

http://www.personal.psu.edu/wvh5107/DESIGN%20PROJECT%201.pdf

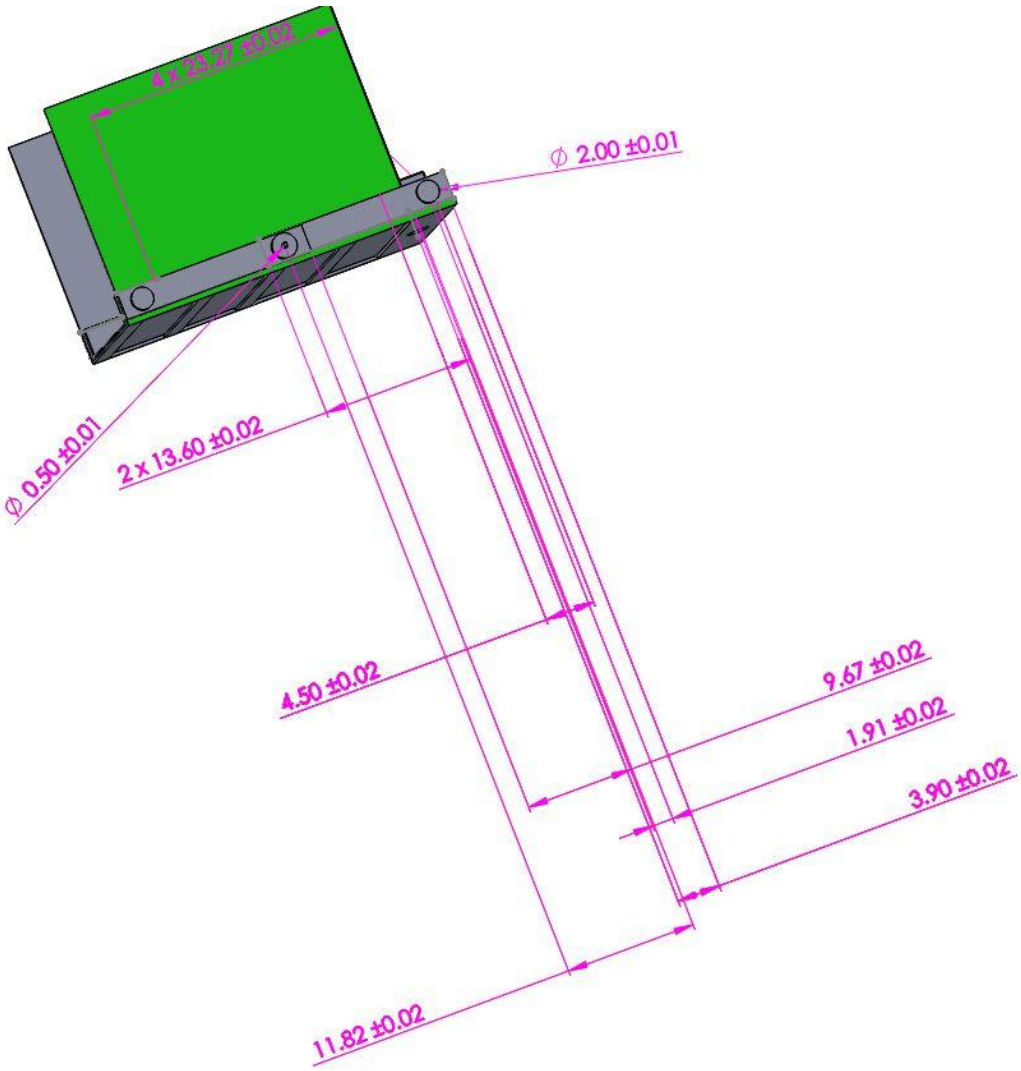

http://www.personal.psu.edu/wvh5107/DESIGN%20PROJECT%201.pdf

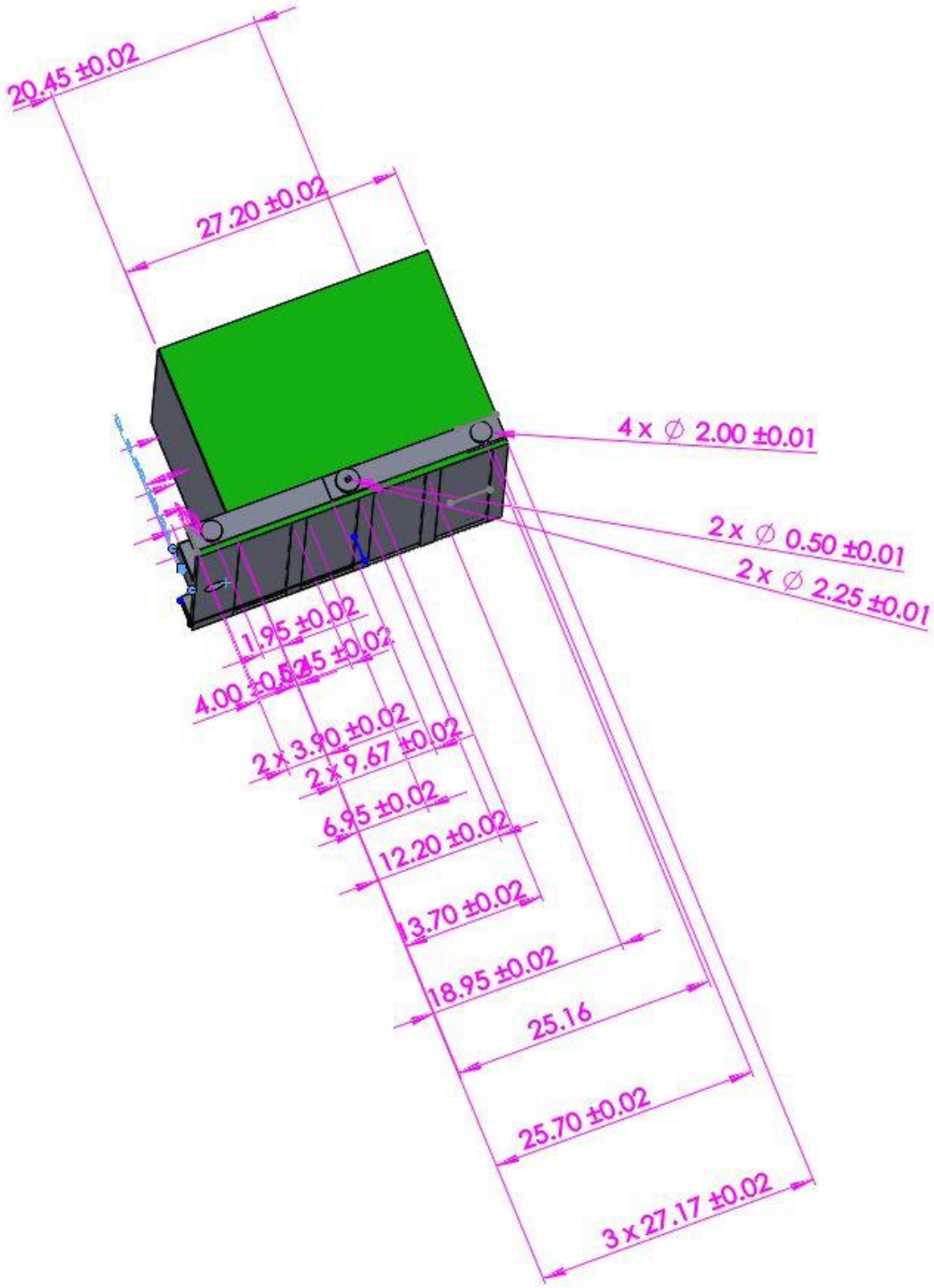

http://www.personal.psu.edu/wvh5107/DESIGN%20PROJECT%201.pdf

Handle and wheel folding mechanism
Drawings and Dimensions:

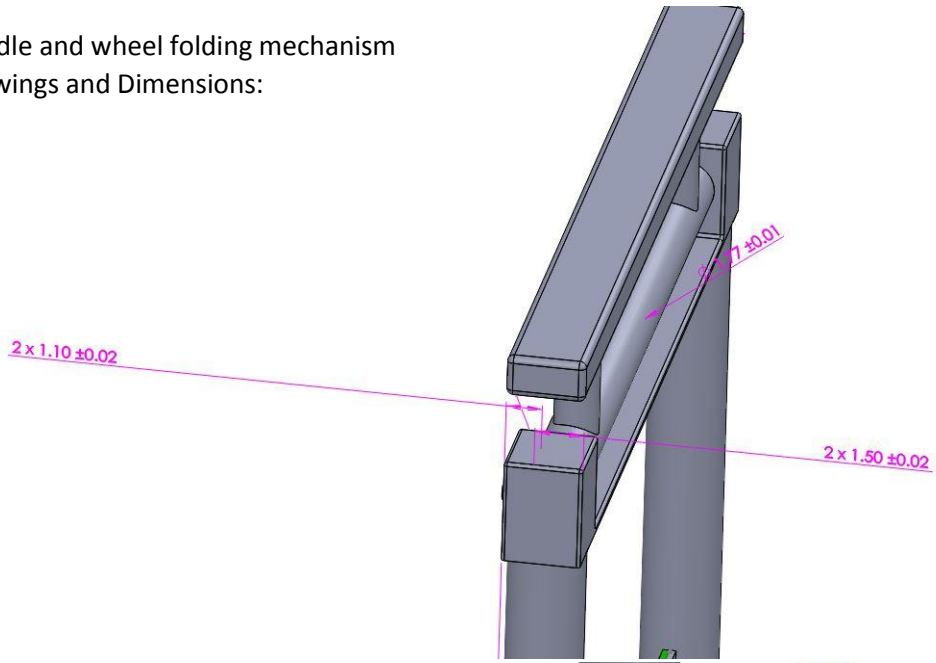

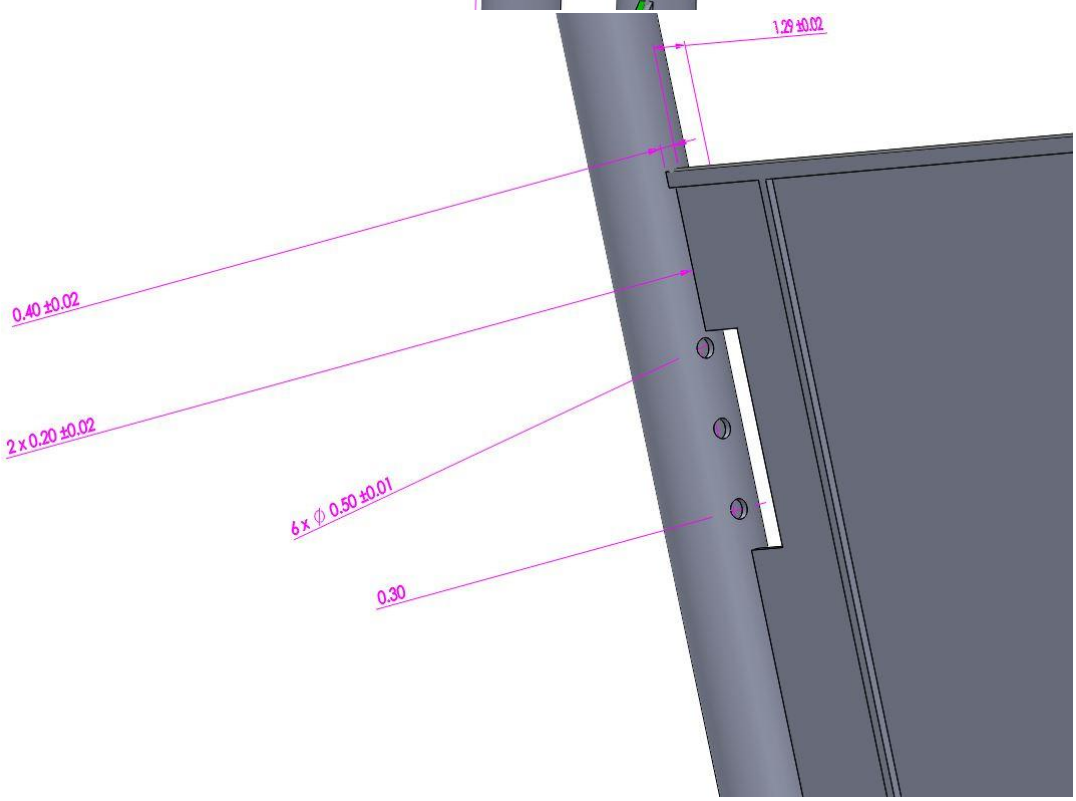

http://www.personal.psu.edu/wvh5107/DESIGN%20PROJECT%201.pdf

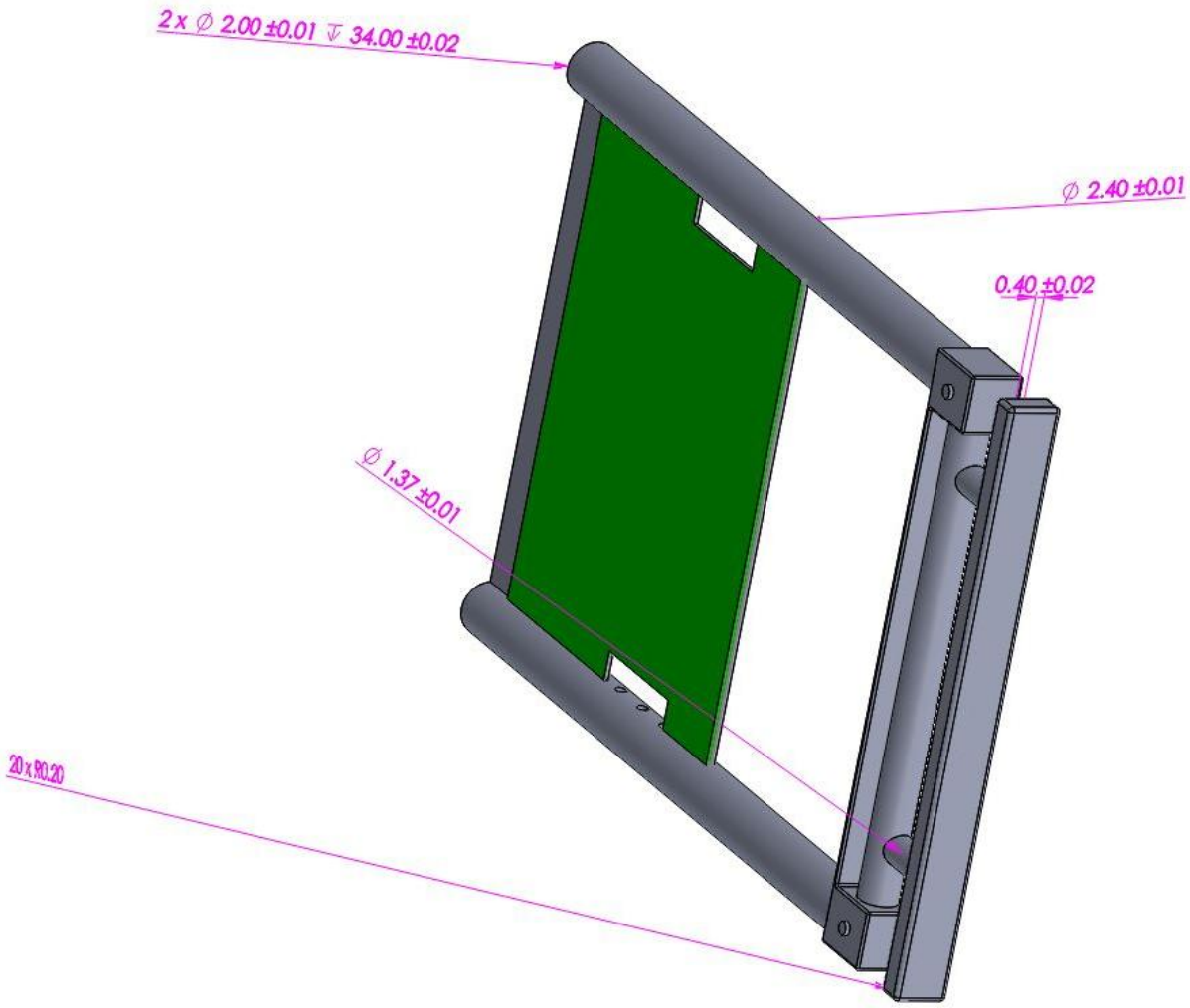

http://www.personal.psu.edu/wvh5107/DESIGN%20PROJECT%201.pdf

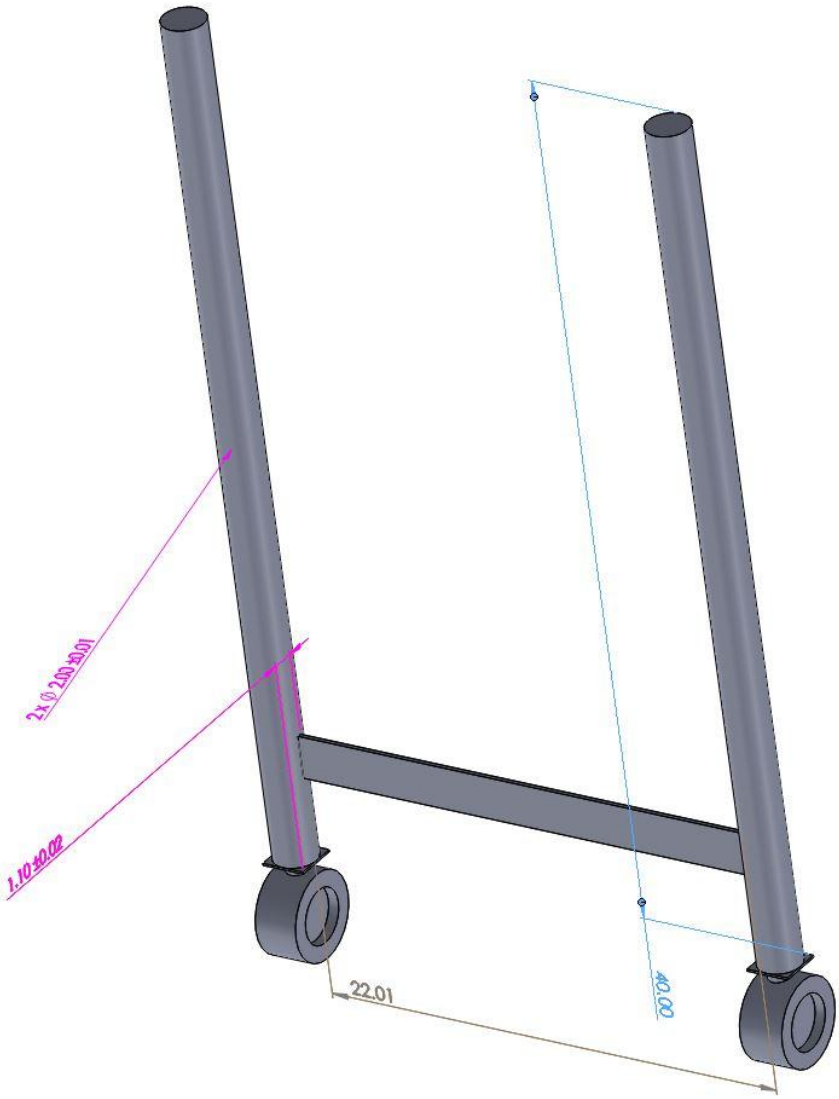

http://www.personal.psu.edu/wvh5107/DESIGN%20PROJECT%201.pdf

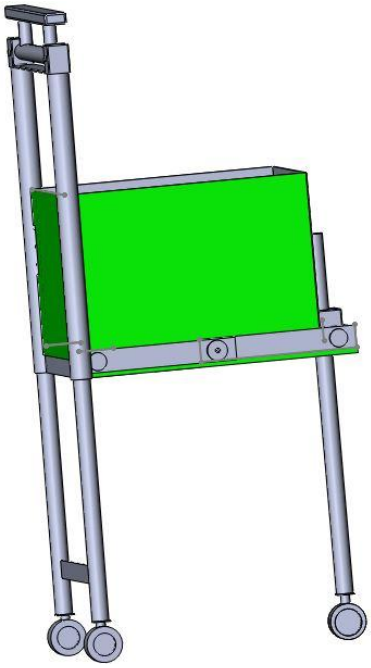

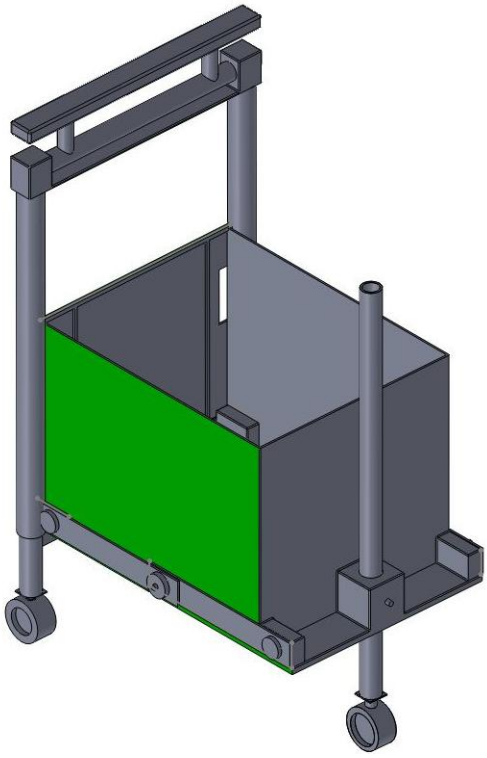

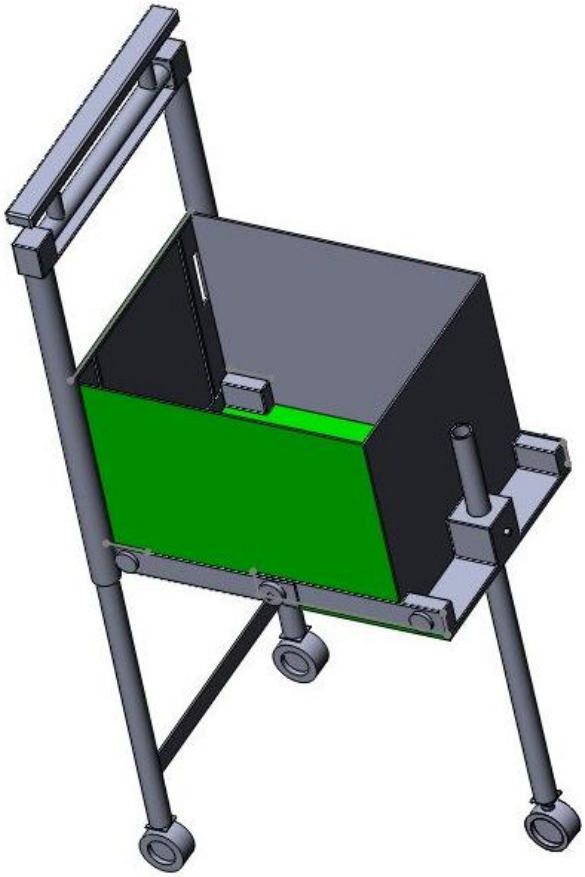

Working Mechanism:

Microsystems

Folding Arm:

The main working mechanism in the cart are the two arms that allow the basket of the cart to be easily compressed or extended as needed. Each arm can be found on the bottom of each side of the cart when the cart is fully extended. Similar to how a human arm would function each arm consists of two rectangular strips of metal that attach to a central knuckle in the middle of the basket. There is a whole on the top of each strip and the knuckle that line up perfectly when the arm is extended to create a 180 degree angle and allow a pin to be slid in, locking the cart in place. By simply pulling out the pin and the arms are loosed and the cart can be easily compressed as needed. A spring Pin will be used to ensure a tight fit and optimum stability.

Rail System:

To allow optimum customizability there are a total of five spring pin rail systems throughout the cart (one for each wheel, two for the handle). There is a large tube connected to the body of the cart and a tube small enough to slide freely inside the larger tube connected to an extremity (a wheel or handle). There are holes drilled in the side of each of these tubes that line up perfectly and a spring pin system similar to one found in a suitcase handle or a good pair of crutches that allows the smaller tube to be locked in place to any length the larger tube accounts for.

A spring pin lock is very simple and consists of a push-able pin located inside the smaller tube that has a spring on its base. While in its natural position the pin will extend long enough to keep the tube in place because there is a spring it can pushed in allowing the tube to be slid to any hole needed. To lock it back into place all that needs to be done is to stop applying pressure to the pin and the spring will return to its natural extended position.

Caster Wheels:

There are three “caster” wheels located throughout the cart that allow the cart unparalleled maneuverability. Each wheel extends from a ball bearing allowing it free 360 degree rotation.

Macrosystems

Foldable Basket:

The body of the cart is an easily foldable basket with a strong base and canvas walls. When each arm is extended (see Arm System) sheets of strong metal can be placed on top to create a platform and a complete square. These metal plates rest on metal strips that connect each folding arm. When these strips barely fit in the base of the cart so that when they are all in the cart is rigid and strong.

Back Wheel Structure:

To increase structure and strength the tubes the back wheels sit on the bottom of are connected to each other and run on parallel rail systems (see Rail System), keeping them even constantly. Because of this the back wheels can be fully extended as needed or when the cart is collapsed compress to extend out of the cart just the size of the wheels themselves.

Front Wheel Structure:

The tube that the front wheels sits on is identical to the tube in the back two wheels, the only difference in the location and how the wheel is connected to the cart. The wheel's tube is located on a lip extending out of the front of the cart and can freely slide through a box like structure on that lip. While the box it slides through only has one hole, the tube the wheel sits under has holes consistent with the holes found in the back of cart, allowing all wheels to be at the same height.

It is worth noting that the middle wheel's location will always remain in the exact middle of the lip as to create a perfect triangle between the three wheels and to allow the cart to

Handle:

The handle of the cart is very simple and operates on the same type of rail system found in the back wheels. Coming out from its two rails is a simple steel tube with enough room free for anyone's hands to easily fit.

Operating Instructions

Collapsing the Basket:

1)Make sure there is nothing currently in the basket and remove the plastic plates from the bottom of the cart and set them aside temporarily.
2) Making sure that the cart is in an already stable state (you may find it easier to collapse the wheels before collapsing the basket) carefully pull the pin from the arm on the bottom of both sides of the basket.
3) Apply pressure at the bottom of each elbow joint as to create an angle over 180 degrees above each elbow.
4) Apply pressure on both the front and the back of the basket towards the center of the basket until the cart will collapse no further.
5) The basket is now complete collapsed and the plastic plates you pulled out earlier should fit conveniently aside.

Extending the Basket:

1)Remove everything from inside the cart and make sure your three plastic plates are nearby as well as the pins you will need to secure the elbow joints.
2)Place your hands inside the cart and onto the back and front of the cart applying pressure until the two arms of the cart have extended fully.
3)Carefully place the two pins needed to secure the elbow joints of the cart into the joint. It will only fit if the arm is perfectly straight so make sure that they are.
4)The cart should now be snug, place the three plastic plates that will make up the base along the metal strip base of the cart.
5)Have a great time shopping!

Changing the Height of the Back Wheels/Handles:

1)Find the hole in which there is a pin extending from it. There should be a pin extended from the hole of the same height on the other side of the cart.
2) Push the pin in until it is fully inside the tube. You can do this one at a time or both at the same time, both must be pressed down for the height to be changed though.

3) Once both pins are pushed in slide the tubes until the wheels or handle are at the height you desire.
4) Make sure both pins pop back in place and the wheels/handle are secure

Changing the Height of the Front Wheel:
1)Push the extruding pin until it is fully inside the metal box and is able to slide freely inside.
2)Slide to desired height and make sure the pin pops back in place.

Cost Analysis:

A number of steps were taken for our cart to be as cheap as possible. Three wheels were used instead of the standard four and when a canvas wall could be put in a canvas wall was put in. The main frame of the cart is made of steel as to easily support the required 100lb weight and beyond. At the end of the day the cost of the cart breaks down as follows:
-All measurements done in inches

Part	Dimensions	Material
3x Tubes (Small)	ϕ1.9x40	A36 Steel
2x Tubes (Large)	ϕ2.4x34	A36 Steel
2x Plates (Back/Front)	22x21	Lexan Polycarbonate
1x Base (to be segmented into three parts later)	27x22	Lexan Polycarbonate
2x Canvas Walls	27x21	Ultra-thin Polyester Filter Fabric
1xFront Lip	22x4	A36 Steel
3x Caster Wheels	ϕ4x	Steel Caster Wheels
6x Knuckle Joints	ϕ2x1	A36 Steel
5x Strips (4 on base, 1 connected back wheels)	21x2	A36 Steel
4x Strip for “Arms”	2x13	A36 Steel
3x Spring Lock pins	ϕ.05	Steel

1x Handle	ϕ2x21	A36 Steel
2x Spring Pins	ϕ.05	Steel

Prices Taken from www.metalsdepot.com
-$185.28 for 48”x96” A36 Steel Plates ($.04/square inch)
-$125.37 for 252” ϕ2” A36 Steel pipes ($.5/inch)
-$126.42 for 252” ϕ2.5” A36 Steel pipes ($.5/inch)
-$205.2 for 240” ϕ2” A36 Steel Round Bar ($.855/inch)
- (This is the material the knuckle joints will be made out of)

Prices Taken from www.eplastics.com
-$124.51 for 48”x86” Lexan Polycarbonate ($.027/square inch)

Prices Taken from www.mcmaster,com
-$76.34 for 51.9”x150” Ultra-thin Polyester Filter Fabric ($.009/square inch)
-$7.95 for 10 ϕ.05” Spring Pins/Spring-Lock Pins ($.795/pin)
-$7.96 for 1 Full Swivel Caster Wheel ($7.96/wheel)
-Wheels Used: Cart-Smart Casters

Cost Breakdown

402 square inches of A36 Steel	$16.08
6 inches of ϕ2” A36 Steel Round bar	$5.13
1518 square inches of Lexan Polycarbonate	$40.986
80” of ϕ2” A36 Steel pipes	$40.00
68” ofϕ2.5” A36 Steel pipes	$34.00
1134 square inches of Ultra-thin Polyester Filter Fabric	$10.206
5 Spring Pins	$3.975
3 Steel Caster Wheels	$23.88
Total:	**$174.257**

http://www.personal.psu.edu/wvh5107/DESIGN%20PROJECT%201.pdf

Conclusion:

Throughout this project has been an effort to strive for innovation and specificity. Through blunders of design to a working prototype this project has been no easy task. When we began this project we had a hard time collecting data for customer satisfactory because of are limited customer strata of manly college teens (who just wanted a cheap cart). Since this data would probably not be in consensus with most buyers we had to make alternative specifications that would better agree with are target buyers (who just don't care about the price but, also functionality of the cart). So with this in mind began are sketching phase to come up with a general idea for are cart. After weeks of review and adjustment we had come up with a collapsible cart design by the name of "Tres Rotula Shaggin Waggin". But after beginning the prototype and in sight of lack of materials we had to adjust are prototype (not are design) so that we would be able to accommodate a collapsible feature for are prototype presentation. Even though we had changed the prototype design it was still a challenge to produce an upright standing functional one to one cart with just the material card board. But in the end we were able to accomplish the prototype that accurately portrayed are main design. This project was a combination of are teams mind and skills in innovation to produce a cart that doesn't just fit the specifications of are target customers but also "complies" with the project parameters.