Sustainable Water Filter

Michael Rokosny, Julian Pecce,
Caitlin Reamer, Ryan Mood

Abstract

The objective of this project was to design an alternative filter press to help reduce cost and prove to be more efficient. We decided to design a model that best fits a mid-sized family in Africa. First, we conducted some background research on previous water filtration methods and the conditions that we needed to improve in order for it to be beneficial to a mid-sized family in Africa. Using this research, we generated several possible concepts for our design. Then, after testing each individual concept, we picked our final design. Next, we revised our designs using pairwise comparison charts.

Revised Problem Statement

Since we didn't perform a customer needs survey, most of our goals in the initial problem statement will be repeated here. Again, our objective was to design an alternative filter press that is made out of cheap and easy to find materials. The product must be easy to assemble and be readily available. Using our research as a guide, we decided that we need to focus on areas such as the material that the filter press is made of, the availability of the components that make up the materials that are used for the filtering, and the simplicity of assembly.

1 Cost (0.59)
  1.2 Availability of materials
2 Small environmental footprint (0.25)
  1.2 Lifetime of filters
3 Water purity (0.12)
4 Ease of operation (0.05)
  4.1 Lightweight
  4.2 Quantity of water filtered

Table 1. Hierarchal Customer Needs List Obtained from Focus Group and Individual Interviews

Table 2. AHP Pairwise Comparision Chart to Determine Weighting of User Friendly Sub-Objectives

	Availability of materials	Lifetime of filters	Lightweight	Quantity of water filtered	Total	Weighting
Availability of materials	**1.00**	5.00	7.00	9.00	22.00	0.59
Lifetime of filters	0.20	**1.00**	5.00	3.00	9.20	0.25
Lightweight	0.14	0.20	**1.00**	3.00	4.34	0.12
Quantity of water filtered	0.11	0.33	0.33	**1.00**	1.77	0.05

Table 3. Benchmarking of Four Products

Feature	Sand Water Filter	Charcoal Water Filter	Cloth/Soil Water Filter
	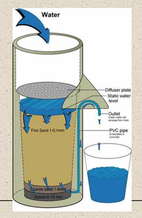	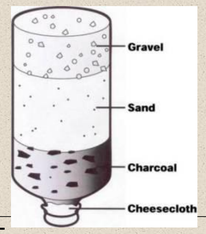	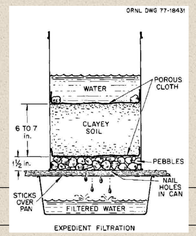
Cost	5	5	4
Materials (made out of)	3	5	3
Easy Assembly	3	5	2
Ease of finding materials that are used in the filtering process	5	5	2
Effectiveness	4	4	3

Table 4. Shell Pugh Chart

	Strength 0.3	Balance 0.2	Ease of Use 0.2	Durability 0.3	Total	Rank
Iteration 1						
Dual Tripod	0	0	0	0	0	**1**
Simple Stand	-1	-1	1	1	0	**1**
Octastand	-1	-1	1	-1	-0.6	2
Iteration 2						
Dual Tripod	1	1	-1	-1	0	**1**
Simple Stand	0	0	0	0	0	**1**
Octastand	-1	1	-1	-1	-0.6	2
Iteration 3						
Dual Tripod	1	-1	-1	-1	-0.4	3
Simple Stand	1	1	1	1	1	**1**
Octastand	0	0	0	0	0	2

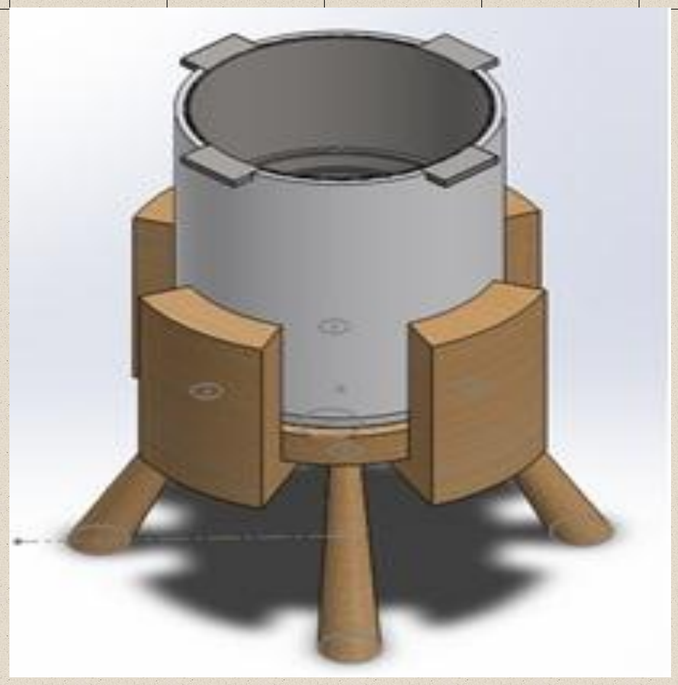

Conclusion

Overall we feel as if the project design was successful. It meets all of the basic customer needs that we felt were the most important and it is effective when it comes to filtering the water. Since it is a product for a family in a third world country the fact that all of the materials needed to maintain the product can be found in nature proves to be extremely beneficial to the consumer and will be useful to the for time to come.