PROJECT 2 FINAL REPORT

Ryan Moon
Caitlin Reamer
Julian Pecce
Michael Rokosny
December 12, 2012
Team #3

Abstract
The objective of this project was to design an alternative filter press to help reduce cost and prove to be more efficient. We decided to design a model that best fits a mid-sized family in Africa. First, we conducted some background research on previous water filtration methods and the conditions that we needed to improve in order for it to be beneficial to a mid-sized family in Africa. Using this research, we generated several possible concepts for our design. Then, after testing each individual concept, we picked our final design. Next, we revised our designs using pairwise comparison charts.

Final Design
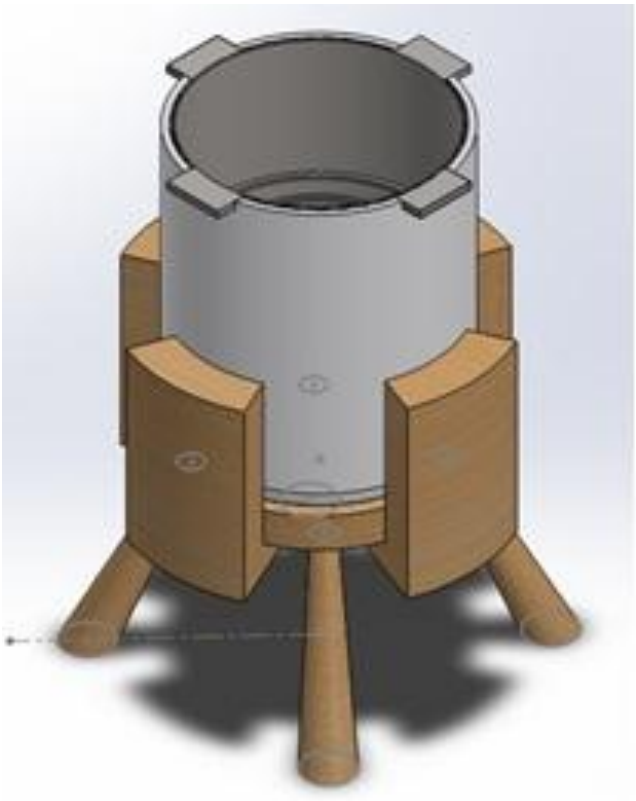
Our final design is comprised of 4 removable parts. There is a stand to hold up the weight of the filter and protect it from falling/breaking. The shell of the filter is the outermost layer made up of ceramic. It is designed to withstand the brutal heat that is common in Africa without affecting the water inside. The middle layer of the filter is the first stainless steel tray. It is designed to be easily removable in order to change the filtering activated charcoal when needed. The innermost layer of the filter is the second stainless steel tray. It is designed to hold the layer of sand as well as the layer of gravel while remaining easily removable. With all of these parts combined, the resulting water filter is effective in its purification of water and can easily be cleaned in case of contamination or ineffectiveness due to aging materials.