PennState College of Engineering

Lockheed Martin

Additive Manufacturing

LOCKHEED MARTIN

Introduction to Engineering Design
EDGSN 100 Section 002

Family First Designs/ Team 5
(Carolyn Baker, http://www.personal.psu.edu/cpb5299/, & cpb5299@psu.edu)
(Shelby Quick, http://www.personal.psu.edu/srq5015/, & srq5015@psu.edu)
(Ricardo Branco, http://www.personal.psu.edu/rbb5221, & rbb5221@psu.edu)
(John Guglielmi, http://www.personal.psu.edu/jdg5449, & jdg5449@psu.edu)

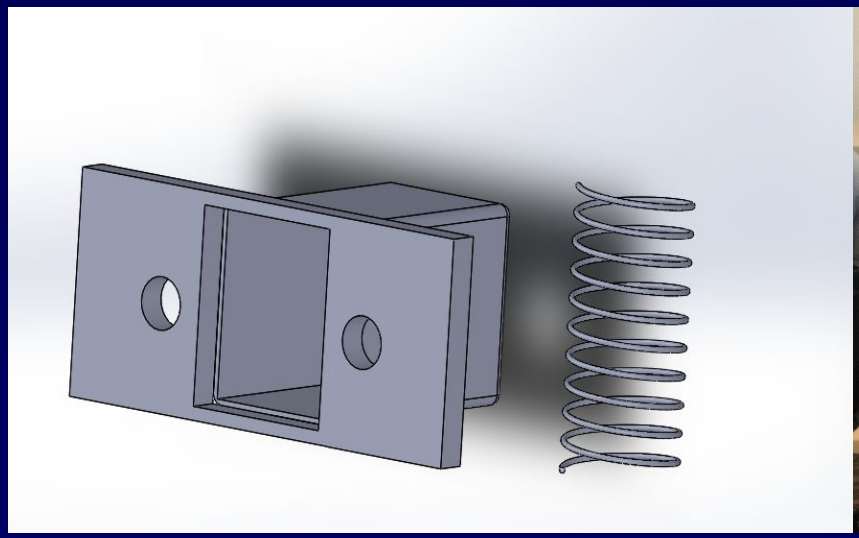

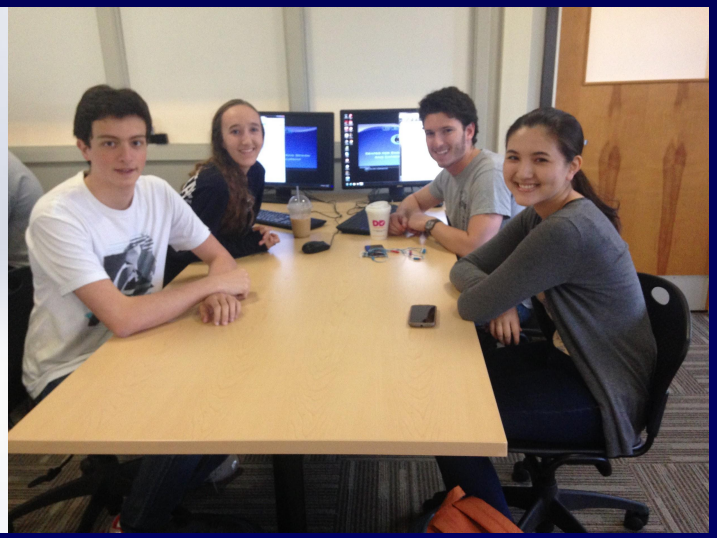

Presented to: Prof. Berezniak
Date: 04/29/2016

Purpose

- The goal looked to be achieved is to utilize additive manufacturing to improve the current UAV elevator design and connection.

- Possible improvements include a decrease in weight, an increase in function, a decrease in cost, or the like.

Background

- UAV parts are disassembled during the impact to relieve some stress in the UAV's parts.

- However, most of the members and the connections will still suffer a moderate amount of stress.

- In our project, we will focus solely on the elevator part and its connection with the back of the UAV. Our objective will include building a complementary part that will fit between the elevator and the tail of the plane that will primarily serve as a stress reliever.

Sponsor

- Lockheed Martin is a global security and aerospace company that is principally engaged in advanced technology systems.

- Lockheed Martin is a large defense supplier to the United States government, making the majority of their products and services military-oriented.

- Because their products are being utilized in harsh environments, the company is working towards expanding their range of manufacturing--incorporating additive manufacturing--to make parts available and ready more easily.

Project Description

- The UAV project peaked our team's interests and allowed for the greatest flexibility while still giving a set of guided directions.

- Project: develop an internal member to transfer and distribute the shock loads from the tail to the elevator.
  - Designing a structure that can survive multiple landings and that will see bending moments acting on the lever and fastener holes
  - Building structures that are not limited to lab or factory production
  - Lightening the structure's weight to improve the UAVs' maximum flight time and payload
  - Fitting the structure within the provided volume.

Procedures (1 of 2)

- The UAV sees bending moments where the tail connects to the rear elevator through its lever arm and fastener holes during landing.
  - Team decision: eliminate these bending moments completely.
- This was accomplished by a system that ejects the tail during the landing impacts. Within the connections of the tail and elevator, an additively manufactured spring and housing device now sits:
  - One end of the spring is attached to the housing and the other end is attached to a magnet which keeps the spring in compression.
  - The magnet would be attached to the tail of the UAV while the housing would be attached to the elevator.
  - The spring is to be made so that its spring constant, under compression, can eject the elevator from the tail of the UAV.
  - The magnet is chosen so that it is greater than the force of the spring that it is holding in compression plus the maximum drag that could be applied to it during flight, but less than the impulse applied to it during a landing. This would ensure that the tail does not prematurely eject during flight.

Procedures (2 of 2)

- During landing, the bending moments acting on the lever arm and fastener holes would shear the magnet from the housing, weakening the magnetic force holding the spring in compression. The spring force by the spring pushing against the elevator would now be stronger than the force of the sheared magnet holding it in compression and thus the tail would be ejected. The rear elevator, now freed from the tail of the UAV, sees no bending moments applied to its lever arm and fastener holes.

- The tail and elevator are still connected by the uncompressed spring so it is not lost during the landing event.

$$F_{landing} > F_{magnet} > F_{drag} + F_{spring}$$

Results and Discussion

I. Conceptual Design

The design team began the first phase of the design process by analyzing the possible forces and stresses that the UAV may undergo during landing.

It was determined that most UAV parts would suffer less damage if they came disassembled upon impact. The team decided to create a spring and magnet based shock absorber.

II. Analysis

The prototype is meant to fit into the elevator of the UAV as a small, lightweight component that can survive multiple landings.

A spring fits inside the component and ejects the elevator upon impact. In doing so, the shock absorber not only endures much of the shock of landing but also removes all shock from the elevator.

III. Summary

A prototype of the shock absorber component was created using the Penn State MakerBot Innovation Center. The team chose to create a spring and brace system as an internal shock absorber because the structure, being a lightweight internal component, would not affect the flight of the UAV but would eliminate any stress upon landing.

Conclusions and Recommendations

Ultimately the analyses done of the potential UAV part illustrate the innovative use of materials and additive manufacturing to maximize the UAVs' control in landing.

The magnet and spring release system both improve the transfer and distribution of shock to the elevator, as well as provide a part that can be produced in any environment--not limited to labs or factories.
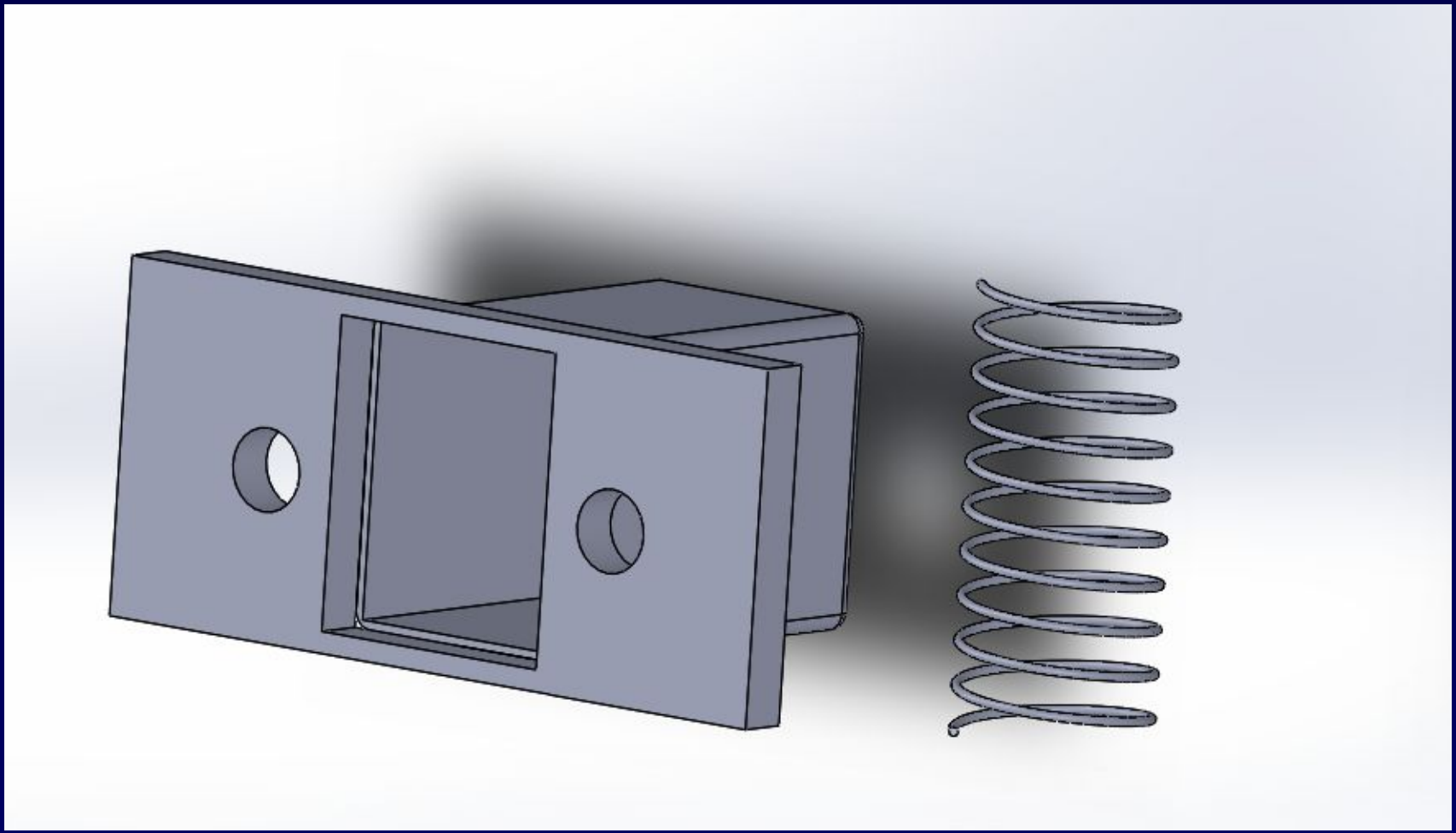
Closing