CAD Projects

Over the course of the semester, we have been gradually introduced to different CAD topics, and generally rules that dictate how we make certain shapes. Many tutorials and projects have been assigned that first taught us how to perform a certain action, and then execute in a project setting. Below are different CAD techniques we learned throughout the semester.

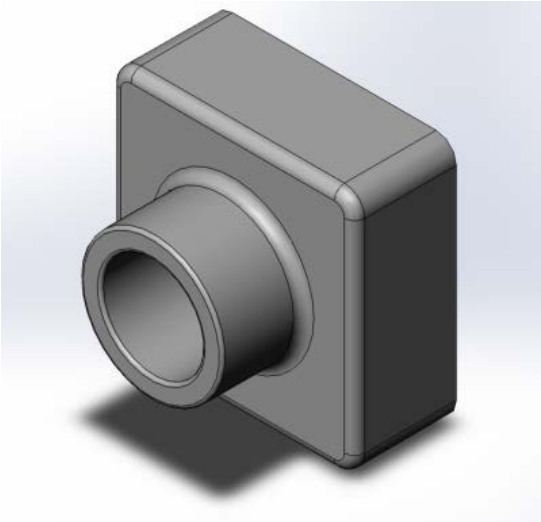

Figure 1: We began CAD by making simple shapes and extruding them, along with making extruded cuts. We were also introduced to fillet, which rounds of corners and edges. We used this technique to make a camera shape.

Figures 2 and 3: We continued with learning the revolve technique, which involves drawing one half of an object shape and then revolving it around a central axis. We practiced this technique in the candle holder on the left. We also were taught sweep, in which material is swept through a defined line path. This can be seen in the handle in the candle holder and the wire on the right.

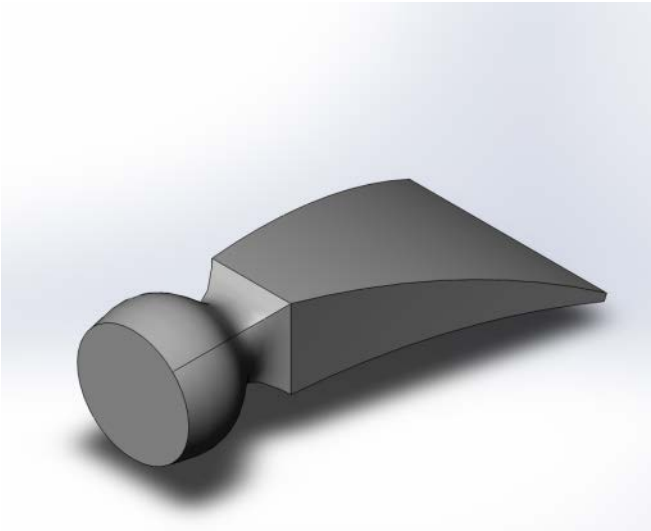

Figure 4: Another important technique we learned was lofting. This technique involved the curvature of an object from one point to another. It usually involves a wider base of materials converging to a single point or a skinnier base. We used lofting to create a hammer head.

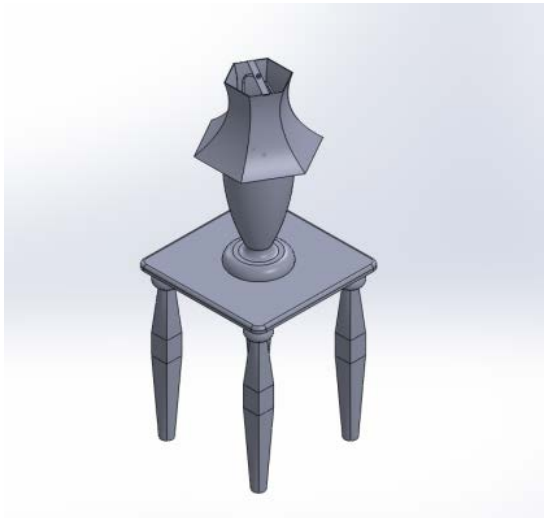

Figure 5: After learning how to make any object in CAD, we were then taught how to combine all objects together into an assembly. In an assembly, all objects must be mated together in some orientation in which the object can no longer move, make the object as realistic as possible. In this activity, students had to make a table and different components of a lamp and combined them into a lamp on a table.

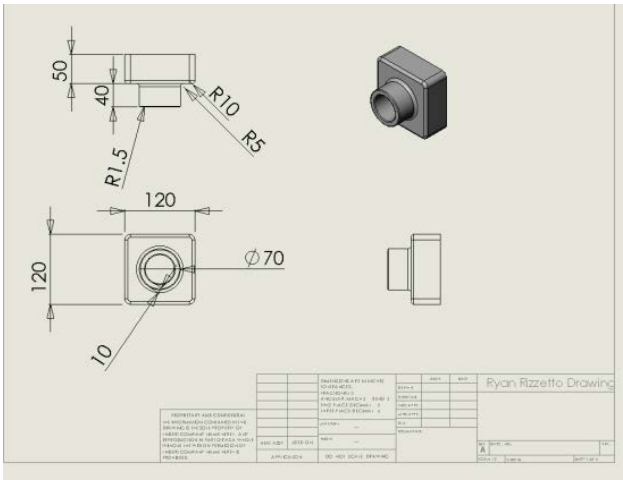

Figure 6: One of the last topics learned in CAD was dimensioning. In dimensioning, three views (top, front, and right) are displayed on a sheet, in which the dimensions of height, width, and depth are expressed in measurements. A final isometric view is displayed in the corner to show how the object would look three dimensionally, since all three views are in only two dimensions. The camera object was dimensioned in the picture on the left.