EDSGN 100: Introduction to Engineering Design

Section 10 Team 6

# FOLDING SHOPPING CART

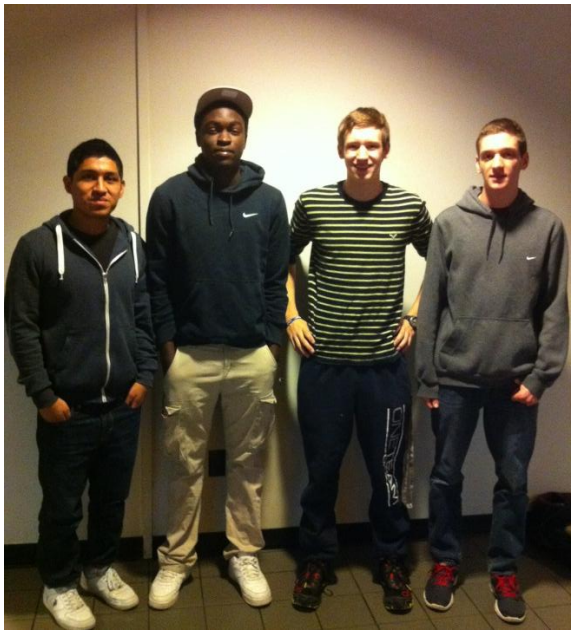

Submitted by: Kevin Chacha, Ugonna Onyeukwu, Patrick Thornton, Brian Hughes

Submitted to: Xinli Wu

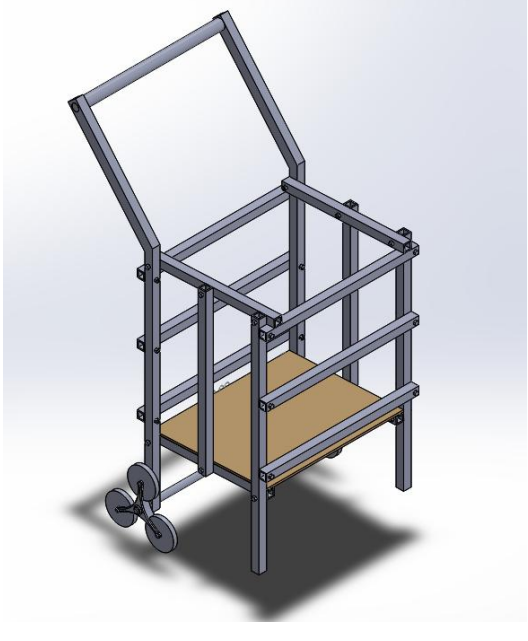

October 28, 2013 http://www.personal.psu.edu/pmt5086/edsgn100_fall13_section10_team6_dp1.pdf

# Table of Contents

Cover Page . . . . . i

Kevin Chacha

Abstract . . . . . 1

Kevin Chacha

Introduction . . . . . 1

Kevin Chacha

Description of the Design Task . . . . . 2

Brian Hughes

Design Approach . . . . . 3

Brian Hughes

The Final Design approach and its Prototype . . . . . 6

Patrick Thornton

Engineering Analysis and Cost analysis . . . . . 10

Patrick Thornton

Conclusion. . . . . 11

Ugonna Onyeukwu

Acknowledgement . . . . . 11

Ugonna Onyeukwu

# Abstract

Our team designed a folding shopping-cart to solve the burden of bringing groceries into an apartment without an elevator or assistance. Through seven weeks of design, it can be concluded that our team designed a folding shopping that is innovative, simple, and effective for people who need assistance with groceries.

# Introduction

Our team was given the task of creating a folding shopping cart that would help individuals who live in an apartment or in a house with carrying their groceries in an easier, simpler way. Our team collected information through survey and other resources to help gather as much information as possible to help create a device that would be of maximum use to the customer. Our team spent many hours brainstorming ideas to create the best device that would help the public. Our team finally decided on an idea that would help customers in every aspect. This device helps carry a large amount of groceries into an apartment or house while also being able to be mobile through stairs and flat surfaces. The innovative wheels can assist customers with stairs. A tri-wheel design was chosen to help carry groceries up stairs. Also the wheels are able to move on flat surfaces. The innovative designs on this device help provide a reliable, simple device that customers in need will be satisfied to own.

# Description of the Design Task

I. Problem Statement:

Too many people are unable to transfer their groceries from their car to their place of residence.

II. Mission Statement:

Our mission is to build a device that will fold into a shopping cart, and can easily fold back into a compact design. A special wheel design will be implemented on the cart to aid those who have trouble with stairs.

III. Design Specifications:

This product will be designed to be lightweight, foldable, and very versatile so that it will be easy to use yet very helpful. The cart will be able to hold at least one hundred pounds, not sacrificing durability for functionality.

# Design Approach

1. Gantt Chart

| Folding shopping cart | 9-Sep | 16-Sep | 23-Sep | 30-Sep | 7-Oct | 14-Oct | 21-Oct | 28-Oct |
|---|---|---|---|---|---|---|---|---|
| Problem statement | | | | | | | | |
| Mission statement | | | | | | | | |
| customer need assessment | | | | | | | | |
| Gantt chart | | | | | | | | |
| Design approach | | | | | | | | |
| working drawing | | | | | | | | |
| prototype | | | | | | | | |
| working mechanism | | | | | | | | |
| engineering analysis | | | | | | | | |
| cost analysis | | | | | | | | |
| conclusion | | | | | | | | |
| formal write up | | | | | | | | |

2. Customer Needs Assessment

- What is the average weight of groceries you get per shopping run?
- Would a folding shopping cart be of use to you?
- Do you encounter any elevators/stairs to get to your place of residence?
- How long would it ordinarily take to unload your groceries?
- Are your groceries usually fragile or heavy?
- Do you have a lot of storage space?
- What would you be willing to pay for a folding shopping cart?

Our general consensus was that this product would only be useful for the elderly/disabled. The majority of them live in either their family's place of residence or in elderly housing, where they typically encounter either stairs or elevators. Most of the time their groceries are relatively light and space is usually not an issue for storing the cart. The surveyed audience stated that it generally takes them around 20-30 minutes to unload their groceries, and they are forced to take multiple trips between their residence and their vehicle. The majority of their groceries are not fragile, however occasionally they will have eggs or bread. The price range people are willing to pay is around $30-50.

3. Concept Generation

We began with the tri-wheel design because we knew we wanted this design from the start. We designed this wheel with respect to the normal height of stairs, and the wheel is drawn to actual size.

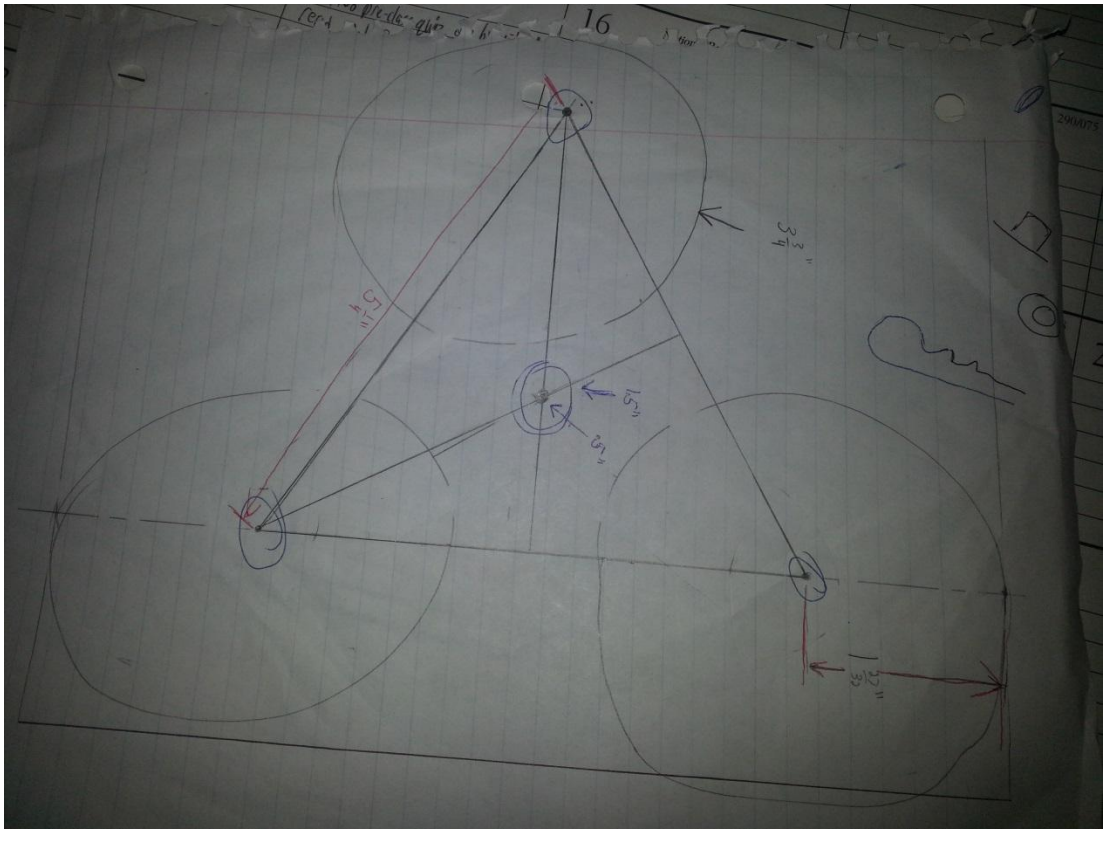

4. Design Selection Matrices

| | Square Cart | Triangle Cart | Bag Cart | Motorized Stair Climber | Tread Climber |
|---|---|---|---|---|---|
| Ease of Manufacture | + | 0 | + | - | - |
| Cost | + | 0 | + | - | - |
| Stability | + | + | - | + | 0 |
| Stair Climbing Ability | + | + | + | + | + |
| Folding Ability | + | 0 | + | 0 | + |
| Capacity | + | 0 | + | + | + |
| Mobility | + | + | + | + | + |
| Ease of Use | + | + | 0 | + | 0 |
| | | | | | |
| Net Total | 8 | 4 | 5 | 3 | 2 |
| | | | | | |
| Ranking | 1 | 3 | 2 | 4 | 5 |

Chart 4.1- Plus/Minus Chart

| Selection Criteria | Weight (%) | concepts | | | | | |
|---|---|---|---|---|---|---|---|
| | | A: Square Cart | | B: triangle Cart | | C: Bag Cart | |
| | | Rating | Weighted Score | Rating | Weighted score | Rating | Weighted score |
| Ease of manufacture | 15% | 3 | 0.45 | 3 | 0.45 | 5 | 0.75 |
| Cost | 15% | 4 | 0.6 | 4 | 0.6 | 5 | 0.75 |
| Stability | 10% | 4.5 | 0.45 | 3.5 | 0.35 | 2 | 0.2 |
| Stair Climbing ability | 15% | 4 | 0.6 | 3.5 | 0.525 | 2 | 0.3 |
| folding ability | 10% | 4.5 | 0.45 | 2 | 0.2 | 5 | 0.5 |
| capacity | 10% | 5 | 0.5 | 3 | 0.3 | 5 | 0.5 |
| mobility | 10% | 4 | 0.4 | 5 | 0.5 | 3 | 0.3 |
| ease of use | 15% | 4 | 0.6 | 4 | 0.6 | 4 | 0.6 |
| | | | | | | | |
| Total score | | | 4.05 | | 3.525 | | 3.9 |
| | | | | | | | |
| Rank | | | 1 | | 3 | | 2 |
| | | | | | | | |
| Continue? | | | Yes | | No | | No |

Chart 4.2- Concept Selection Chart

5. Design Approach

After narrowing our design to the square cart, we decided to focus on the dimensions of our tri-wheel design, ensuring that it would effectively improve the stair climbing ability of our cart. We focused on keeping the motion path of the axel perpendicular to the plane of the stairs; this will ensure a smooth and easy transition up stairs. The axel and support struts are all hollow to maximize cost and weight savings.

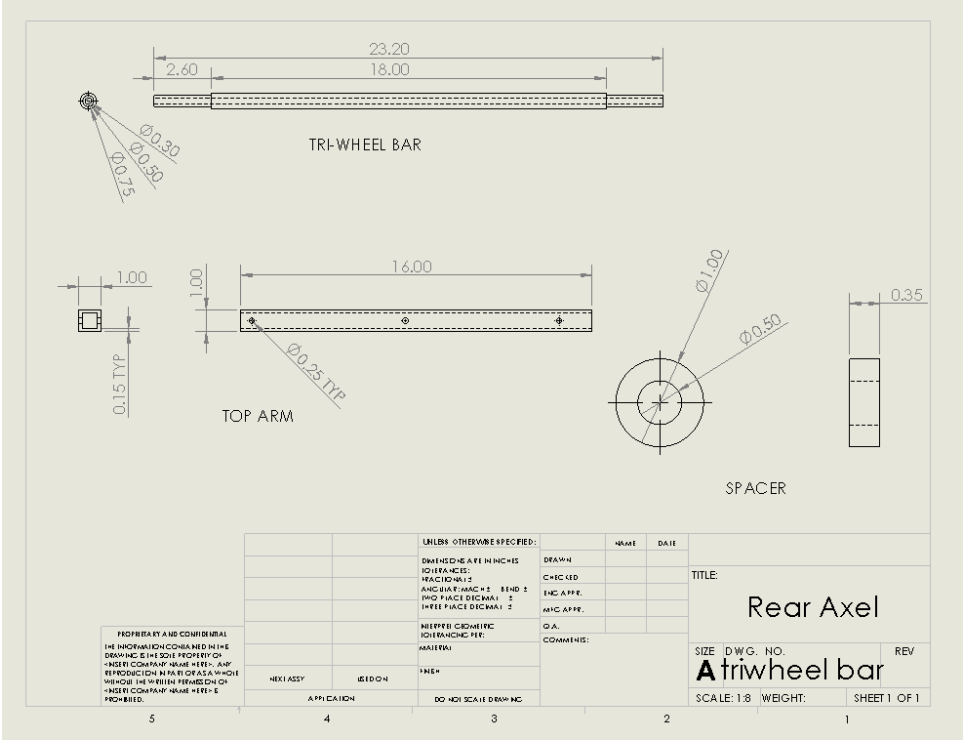

# 6. Working drawings

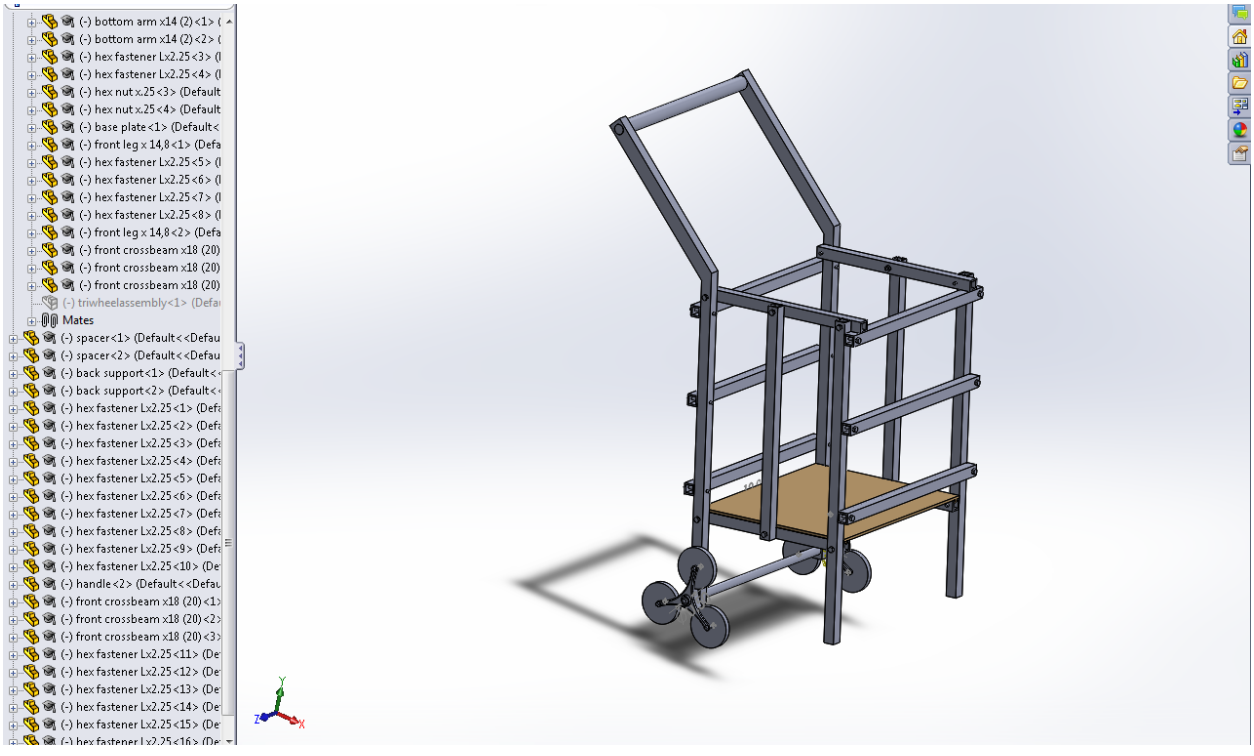

This is a CAD rendering of our cart in the unfolded and folded positions.

## 7. Prototype

The prototype was built out of cardboard and wood, so it cannot hold the specified 100Lbs. However, the cardboard mock-up does serve well to communicate the essence of our design. The scale of the prototype is 1:1 so it is the same physical size as our design and also folds just as the final design will. The prototype's tri-wheels are made out of wood, so they function just as the actual wheels will. We tested the wheel design on the stairs and they performed tremendously.

## 8. Working mechanism and engineering analysis

-Folding:

Our cart features a folding basket and a tri-wheel design to allow for easy storage and the ability to climb stairs. The basket folds by simply lifting up on the outer edge of the basket. This design takes advantage of parallel supports and other geometrical features to compress to a fraction of its original size.

-Use:

The cart is to be unfolded and filled with groceries. The cart is then tilted backwards, such that the front legs are no longer in contact with the ground. It can then be pulled, like a suitcase, to its final destination. To use the cart on stairs, simply approach the stairs head on and drag the cart behind. The wheels will adjust to the stairs and allow for an easy assent, with most of the weight of the groceries supported by the normal force of the stair between each step transition. This will allow for resting midway up the stairs for the less able clients.

-Engineering analysis:

When the basket is open, the top arm of the basket rests on the horizontal crossbeam to keep the cart from opening further than it is designed. The stability of the cart is superior, it is currently designed to carry 100Lbs, which is much more than would fulfill the customer needs. If this tenant of the design prompt were changed, the excess structural integrity could be exchanged for cost and weight savings.

**9. Cost analysis**

Our design uses both aluminum and Abs plastic to achieve a lightweight and cost efficient shopping cart. The axel and bolts will consist of aluminum alloy 6061, which we can source for $1.11/Lb. , likely to become cheaper if we purchase larger quantities. The cost of the aluminum parts is $10.35/Cart but this number could be reduced if we used already manufactured bolts for the joints. The remaining parts of the cart would be made using Abs Plastic resin and injection molding. Using the mass properties tool on SolidWorks to determine the volume of the plastic parts, we determined that the plastic components would cost $45.25 plus a one-time tooling cost to make the injection molds. Overall, the material cost of the cart amounts to $55.60. This number could be lowered by subtracting some of the support pieces in the basket area. The design prompt states 100Lbs of groceries, but this number is not realistic for people who are currently unable to carry their groceries to their home.  If this restriction were removed, our design could be altered to more accurately address the problem. We would then be able to trade some excess stability for cost and weight savings.

# Conclusion

This report introduced a design to a cost effective and lightweight shopping cart. Our group found that using a folding design would lead to easier accessibility and less storage space needed when the cart is not in use. The tri-wheel feature helps to move the cart and its contents up stairs when needed. The materials that are used to build this shopping cart lead to cheap and lightweight shopping cart also. These were the main points that were given to our group when we surveyed people before the beginning of the design process.

# Acknowledgements


- We thank those who were apart of the surveying process.
- We want to extend appreciation to Professor Xinli Wu Ph.D., P.E for allowing us to take apart in this design and construction
- We would like to thank the Penn State model shop and its operators for allowing us to construct a working prototype of our design