Dumpling Chef

Intro to EDSGN 100

Section 009

Team 5

Jonathan Worden
Steven Min
Papon Jungwiwattanaporn
Xutian Cao

Submitted by: Jonathan Worden
Chief Editor: Jonathan Worden
Submitted to: Xinli Wu, Ph.D., P.E.

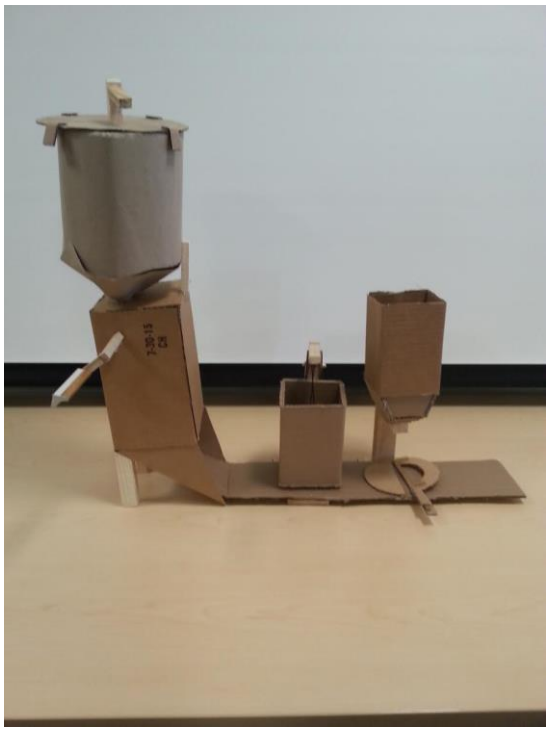

Date of submission: 10/25/2015

Abstract

The team came up with an efficient and inexpensive dumpling maker called the Dumpling Chef. It can produce up to 10 dumplings of consistent shape and size per minute. The machine consists of 5 parts and it is easy plus simple to use.

Table of Contents

1. Cover Page…….page I (**Papon Jungwiwattanaporn**)

2. Abstract…… page III(**Papon Jungwiwattanaporn**)

3. Table of Contents……page IV (**Jonathan Worden**)

4. Introduction……page1(**Xutian Cao**)

5. Design Task ……page 2(**Papon Jungwiwattanaporn**)

6. Design Approach……page 4(**Jonathan Worden**)

7. Final Design and Prototype…..page 9(**Steven Min)**

8. Engineering Analysis ……page18 (**Xutian Cao**)

9. Conclusion And Suggestion…page 20(**Jonathan Worden**)

10. Acknowledgement...page21(**Papon Jungwiwattanaporn**)

11. References……page 22 (**Papon Jungwiwattanaporn**)

Introduction

The idea of the dumpling maker is to design and make a prototype of a machine which can produce at least 10 dumplings in a minute, and which is also easy to operate, clean and store. Under these stipulates and within the interviews of several Chinese restaurants the design was reshaped several times and eventually the final decision was made. The prototype came out through these conditions is named “Dumpling Chef” which fits these stipulates and has a fairly low cost. The prototype contains four assembly parts which can be cleaned and stored easily. Additionally, it contains a lot of plastic material and simplified steps to lower the cost which are what the interviewed Chinese restaurants looking for. Within the lowest cost and highest efficiency this prototype was designed and built.

Design Task

Problem Statement

Dumplings are a traditional Chinese food that is served in most Chinese restaurants. The team agreed that having to continuously make dumpling by hands could be time consuming, especially when making large quantities of dumpling during special events. In addition, dumplings that are made manually could have different sizes and shapes while some customers prefer consistency of the food. Therefore we want to assist restaurants to satisfy their customers with the best dumpling that they deserve.

Mission Statement

To serve a fast-and-perfect dumpling from a specialized appliance

Design Specification

Target Market	The targets are Asian restaurants and families that enjoy eating dumplings
Functions	The dumpling maker is divided into 5 parts; mixing, rolling, cutting, filling and folding. Each part can be disintegrated to ease cleaning and reparation processes. The machine can produce up to 10 dumplings, with a consistency in shape and size, per minute
Material	The mixer will be manufactured from a plastic cylinder and there will be two mixing blades inside. The roller will be also made up of plastic containers and steel cylinder pipes. The cutter will consist of a steel plate, an electric motor, a switch and a string pulley system. The folder will be made up from steel and it consists of an electric motor and a switch. The filling system will be created from a plastic, a spring pulley system and a handle. In addition, the conveyor belt will also be manufactured from a large piece of plastic.
Ergonomics	The dimension of the machine will be 55cmx13cmx80cm. The roller's level stick is designed to be easily grabbed and spinned by hand. Since each part can be separable, the machine can be easily transported
Manufacturing processes	The machine's model is based on SOLIDWORKS/CAD. Each part will be manufactured in a factory but they can be easily assembled by hands
Tools requirement	Hand tools include screwdriver and screws for assembling each part. Machine tools include drilling machine, molder and welding machine
Maintenance requirement	Each part of the machine should be separated and washed after being used to prevent the ingredients stuck on the surface. The rollers and the cutter should be checked once a month to make sure that the rollers operate smoothly and that the cutter is sharp. Lubricant can be applied when the machine started to stuck and jam
Life span	The dumpling maker could last around 7 years with proper care. If the machine needed to be replaced by a new one, customers are encouraged to send the machine back to the company so that the materials can be recycled
Aesthetic appearance	The machine is designed to be simple and plain. The blender is a bowl with smooth curves on its sides. The rest of the machine will has a plain-metallic color and the conveyor belt will be black. We think that the simplicity suits its function as a dumpling maker and makes the machine looks more professional
Quality assurance	The manufacturing procedures are consistently regulated to monitor any errors in the production line. In addition, the team strive to improve our processes to be even more efficient by having a group of engineers who overlook the production processes
Quality control	All parts of the prototype are tested before the actual parts are being manufactured. After each part was manufactured, it will go through quality check procedures before being assembled and distributed to customers
Cost	The total cost of the dumpling maker will be $66.25. This includes the cost of the materials only and does not include the manufacture cost and labor cost
Time scale	It should take around 3 hours to design and 8 hours to manufacture the machine
Safety	Safety regulations are carried out in every manufacturing process to ensure that workers are not harmed by any of the tools. The cutter should be handled very carefully

Table 1. Design Specification

Design Approach

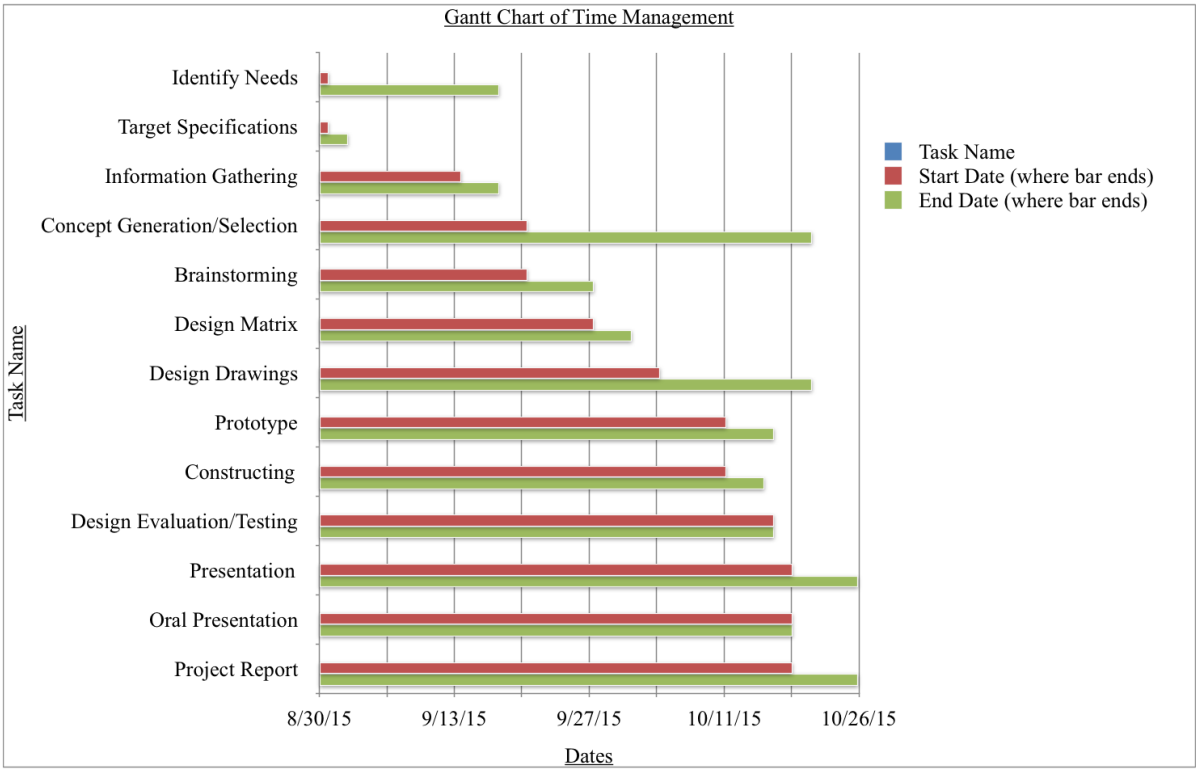

Table2.Design Approach

Questionnaires/ Customer Needs/wants:

How much are you willing to pay for a dumpling maker?

-lower than $200

Do you want it to be portable?

-Yes, but it could also be easily assembled/disassembled

How many dumplings per minute do you expect?

-10 dumplings per minute

Do you want the machine to mix the ingredients for you?

-It would be convenient, but not a necessity

What is the size of a cut for the dough do you prefer? (5cm, 7.5cm, 10cm, 12.5cm diameter)

-The size of the cut will be 10cm.

What is the thickness of the cut for the dough do you prefer? (1.5mm, 3mm, 5mm, 7mm)

-1.5mm

Rate 1-10 (lowest-highest)

Criteria	Concepts				
	Design 1	Design 2	Design 3	Design 4	Design 5
Design	10	6	10	7	9
Simplicity	1	10	9	8	8
Efficiency	9	8	10	8	8
Durability	9	6	8	9	9
Portability	1	10	10 (disassemble)	7	7
Sum	30	40	47	39	41
Net Score	30	40	47	39	41
Rank	5	3	1	4	2

Table.3

Design Selection

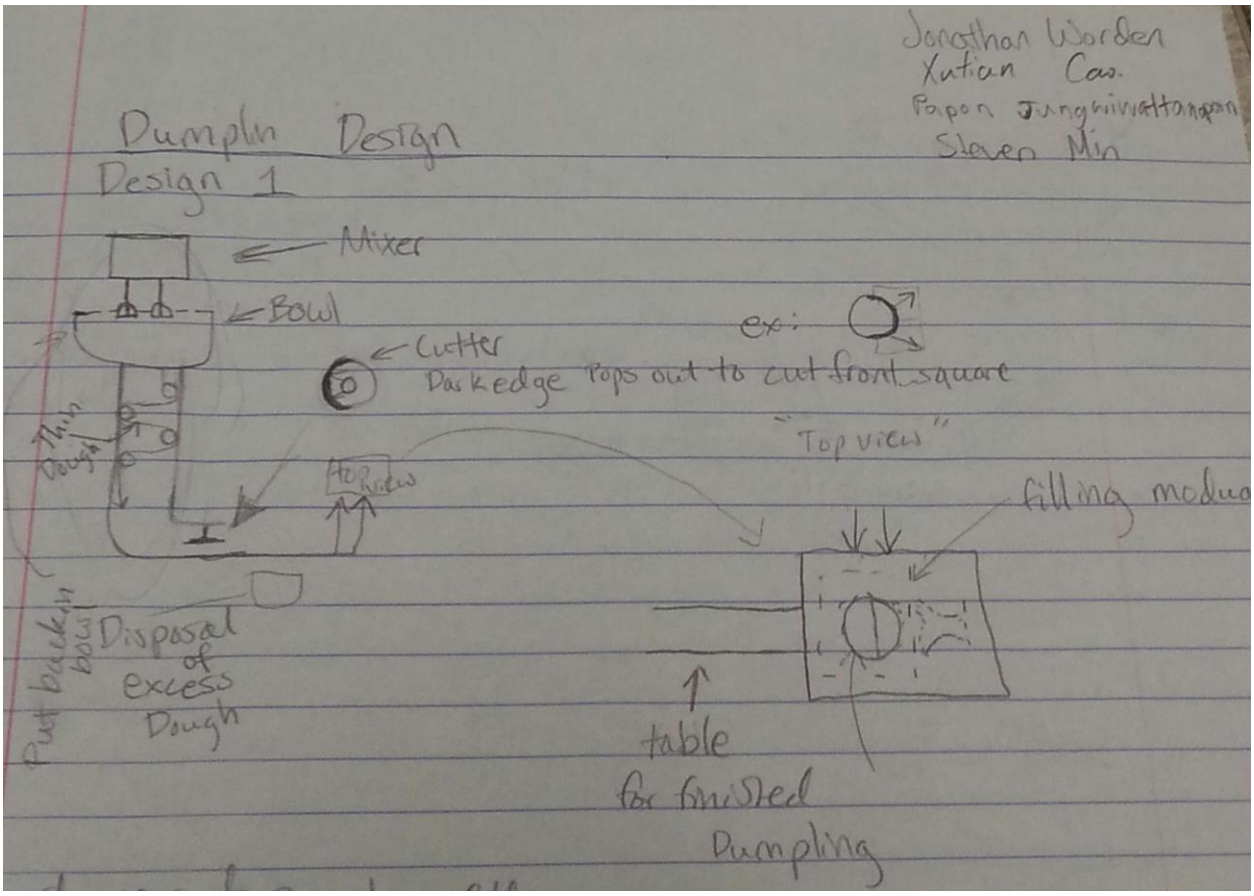

FIG.1

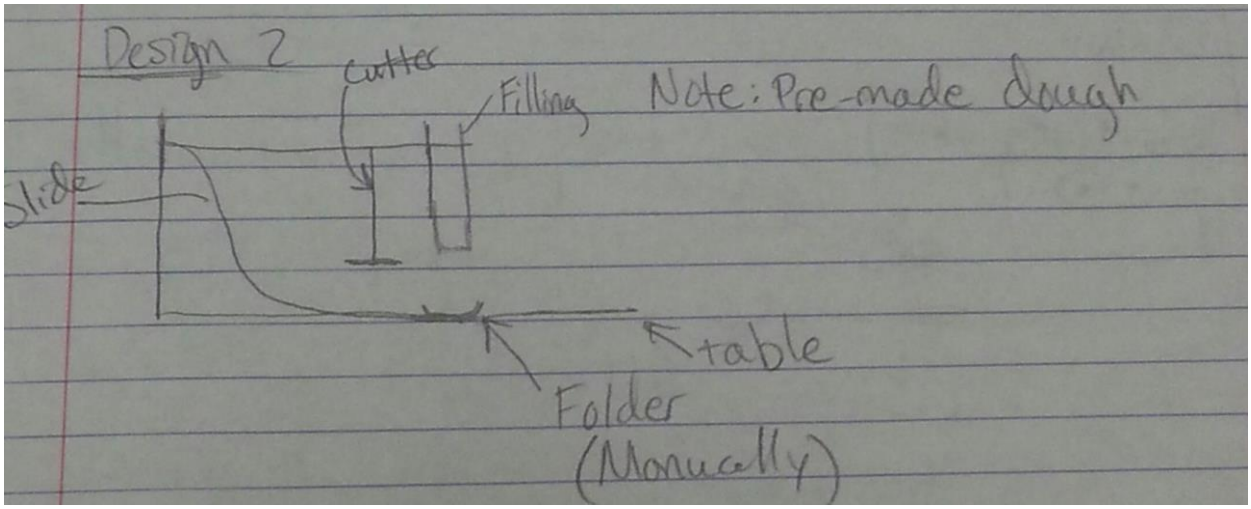

FIG.2

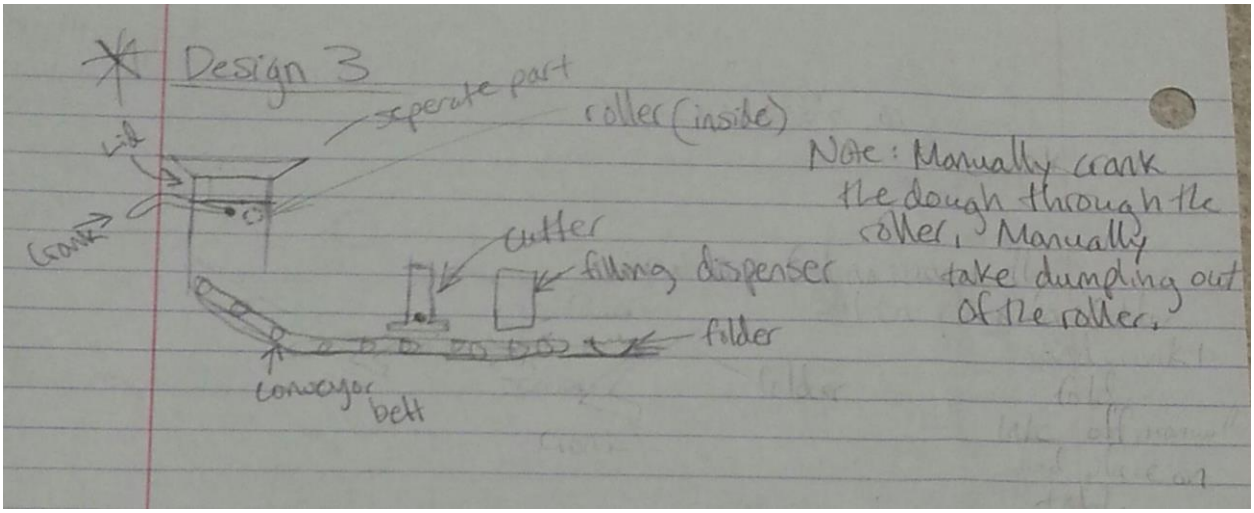
Design 3
seperate part
roller (inside)
lid
crank
Note: Manually crank the dough through the roller. Manually take dumpling out of the roller.
cutter
filling dispenser
folder
conveyor belt

FIG.3

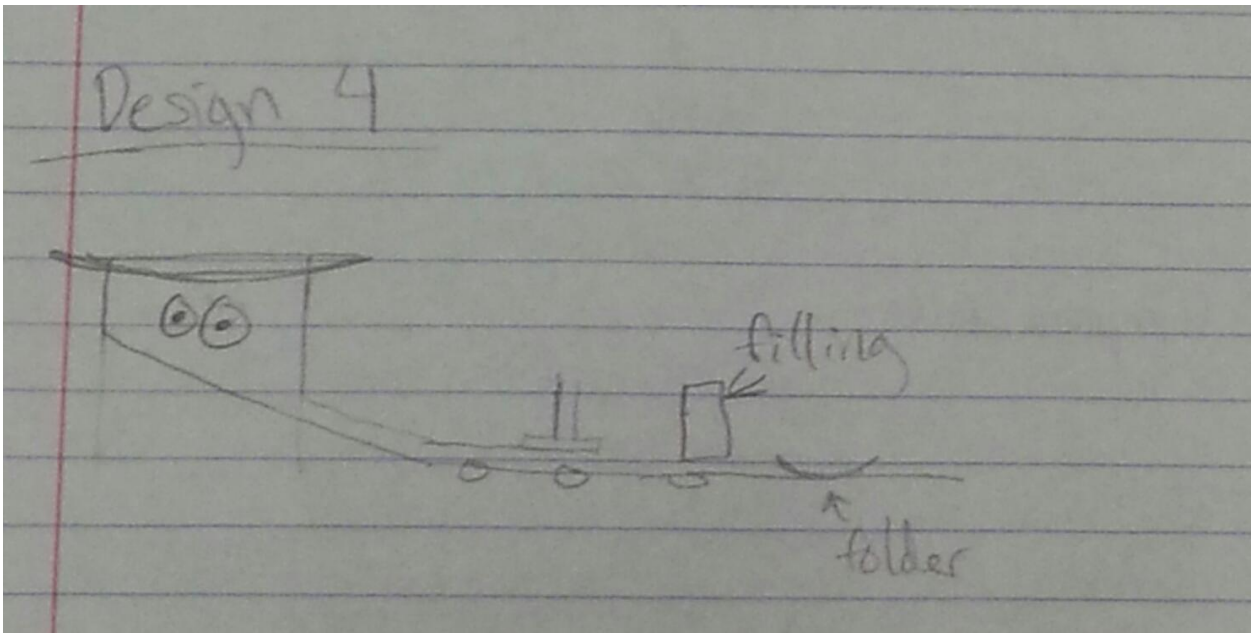
Design 4
filling
folder

FIG.4

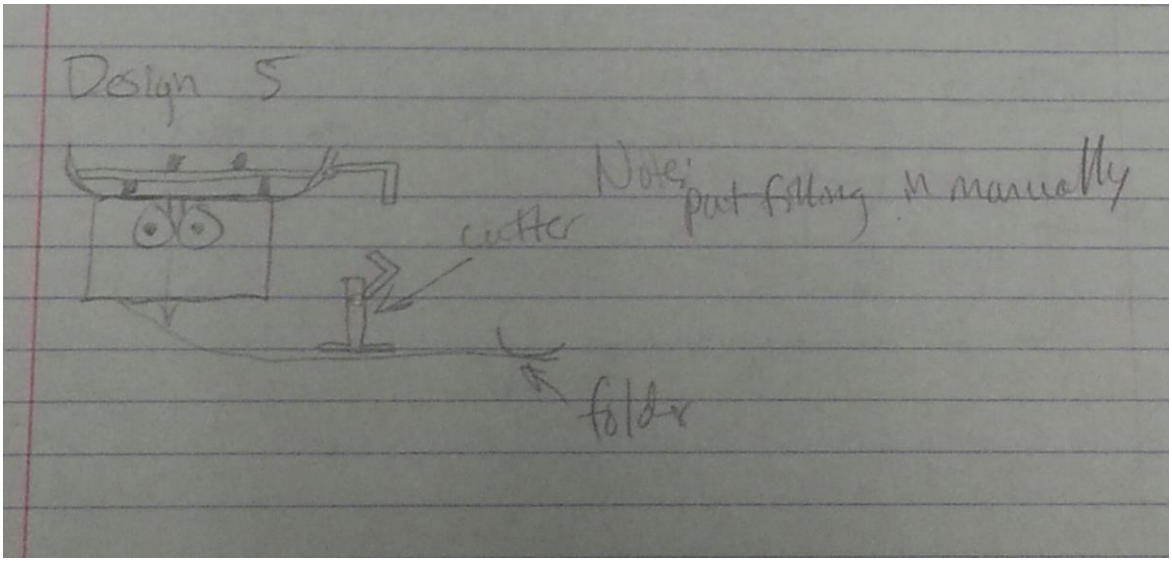

FIG.5

Final Design and Prototype

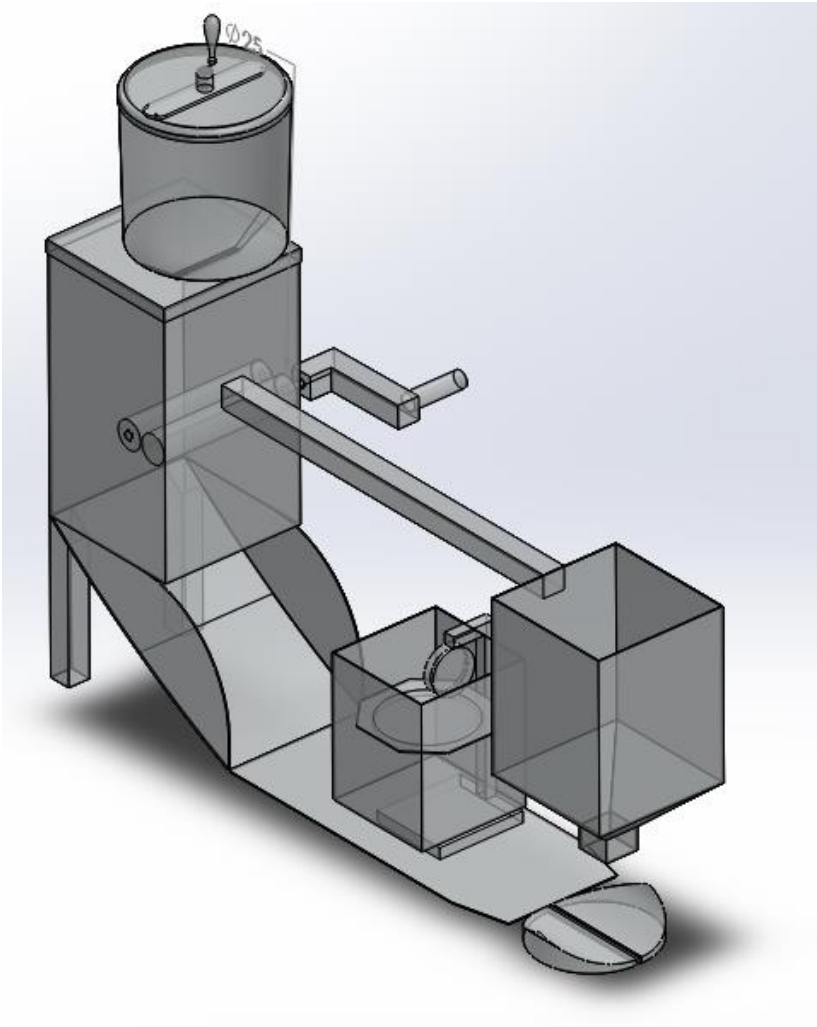

FIG.6

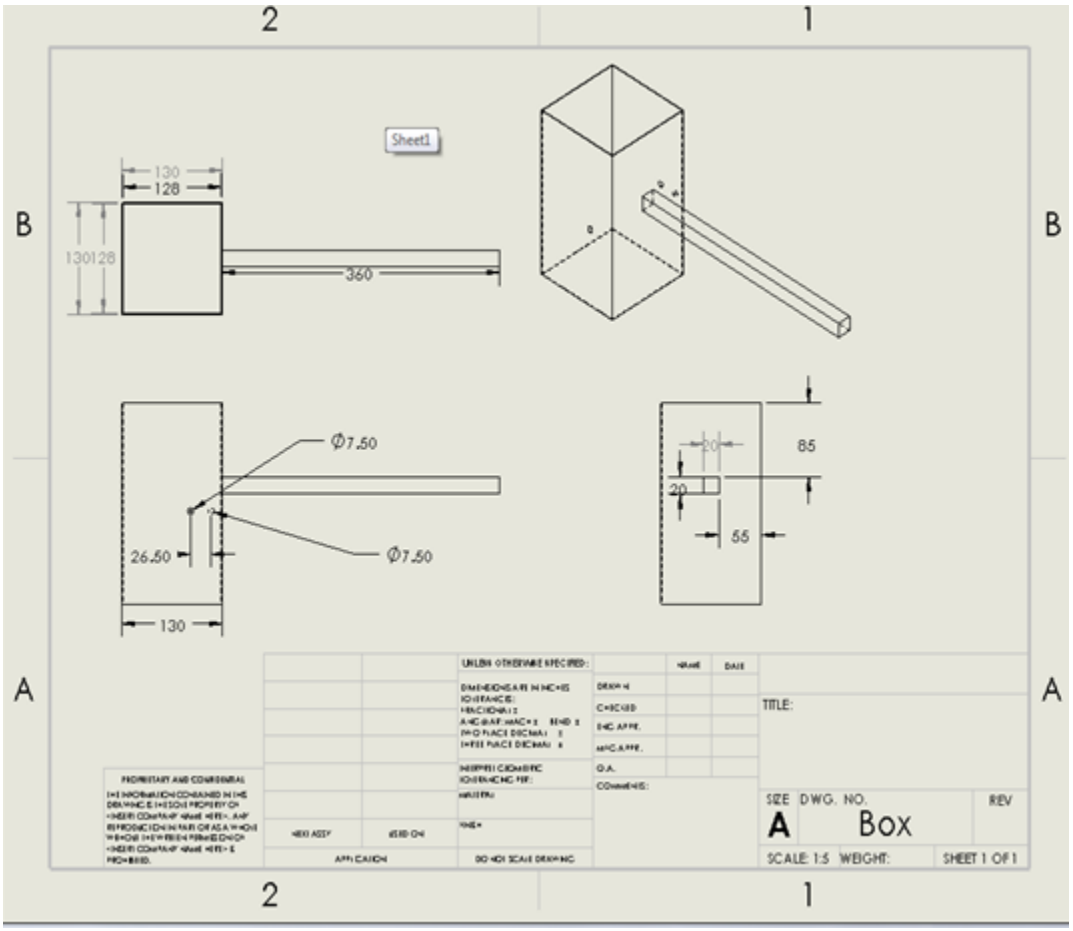
Sheet1
130
128
130128
360
Ø7.50
Ø7.50
26.50
130
20
85
20
55
TITLE:
SIZE
A
DWG. NO.
Box
REV
SCALE: 1:5
WEIGHT:
SHEET 1 OF 1

FIG.7

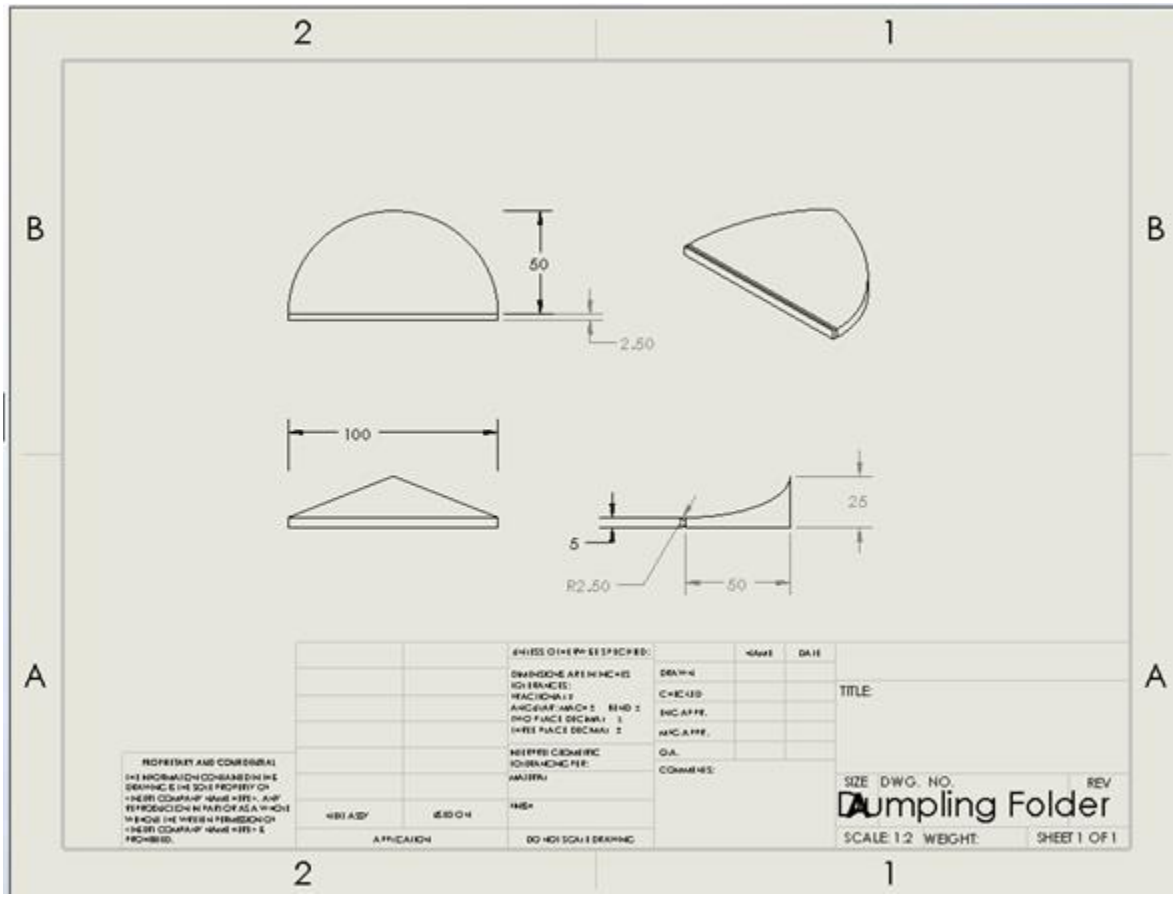
2
1
B
A
50
2.50
100
25
5
R2.50
50
TITLE:
SIZE DWG. NO. REV
Dumpling Folder
SCALE: 1:2 WEIGHT: SHEET 1 OF 1

FIG.8

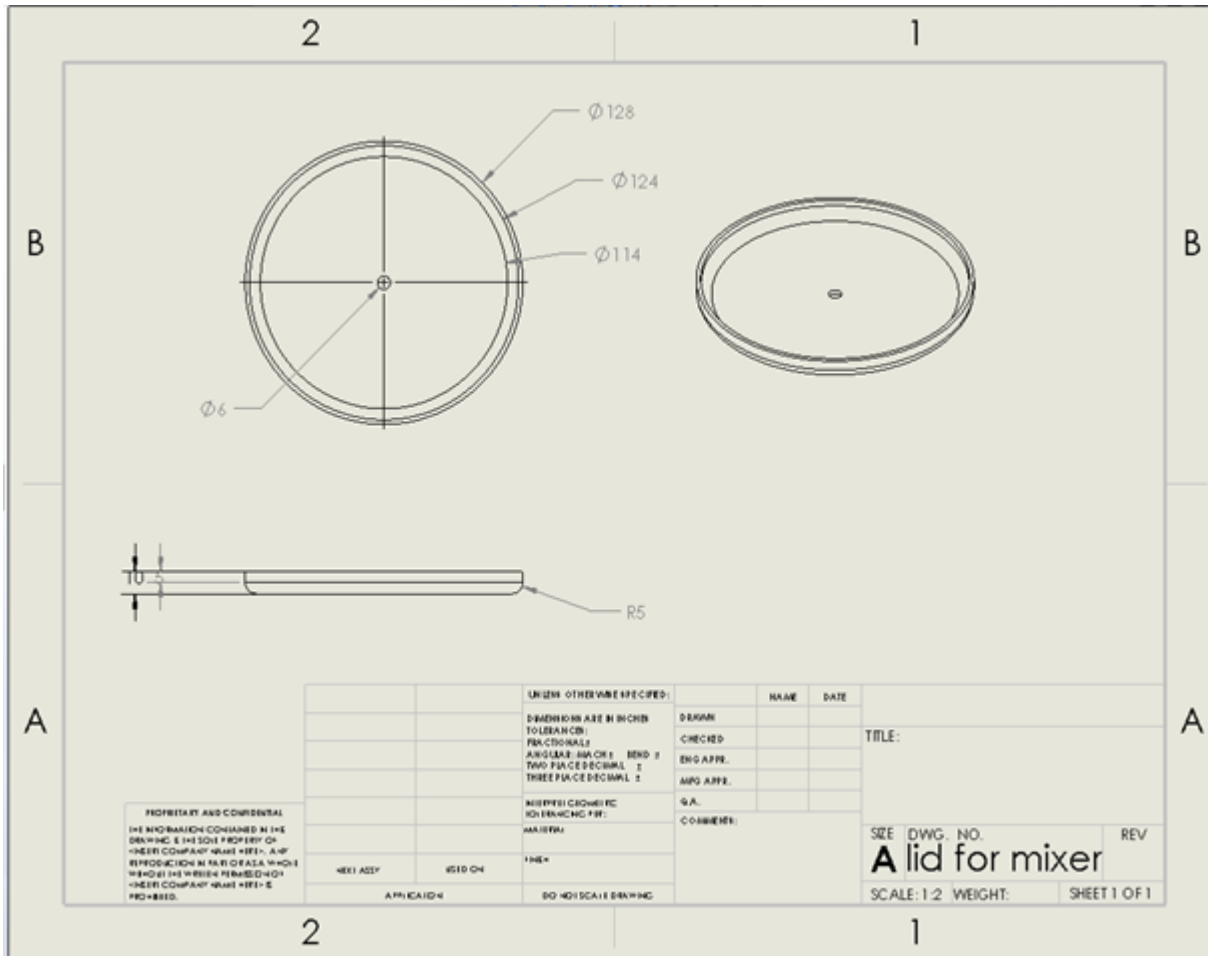
2
1
B
A
Ø128
Ø124
Ø114
Ø6
10
5
R5
NAME
DATE
DRAWN
CHECKED
ENG APPR.
MFG APPR.
Q.A.
COMMENTS:
TITLE:
SIZE
DWG. NO.
REV
A lid for mixer
SCALE: 1:2
WEIGHT:
SHEET 1 OF 1

FIG.9

Digital Images

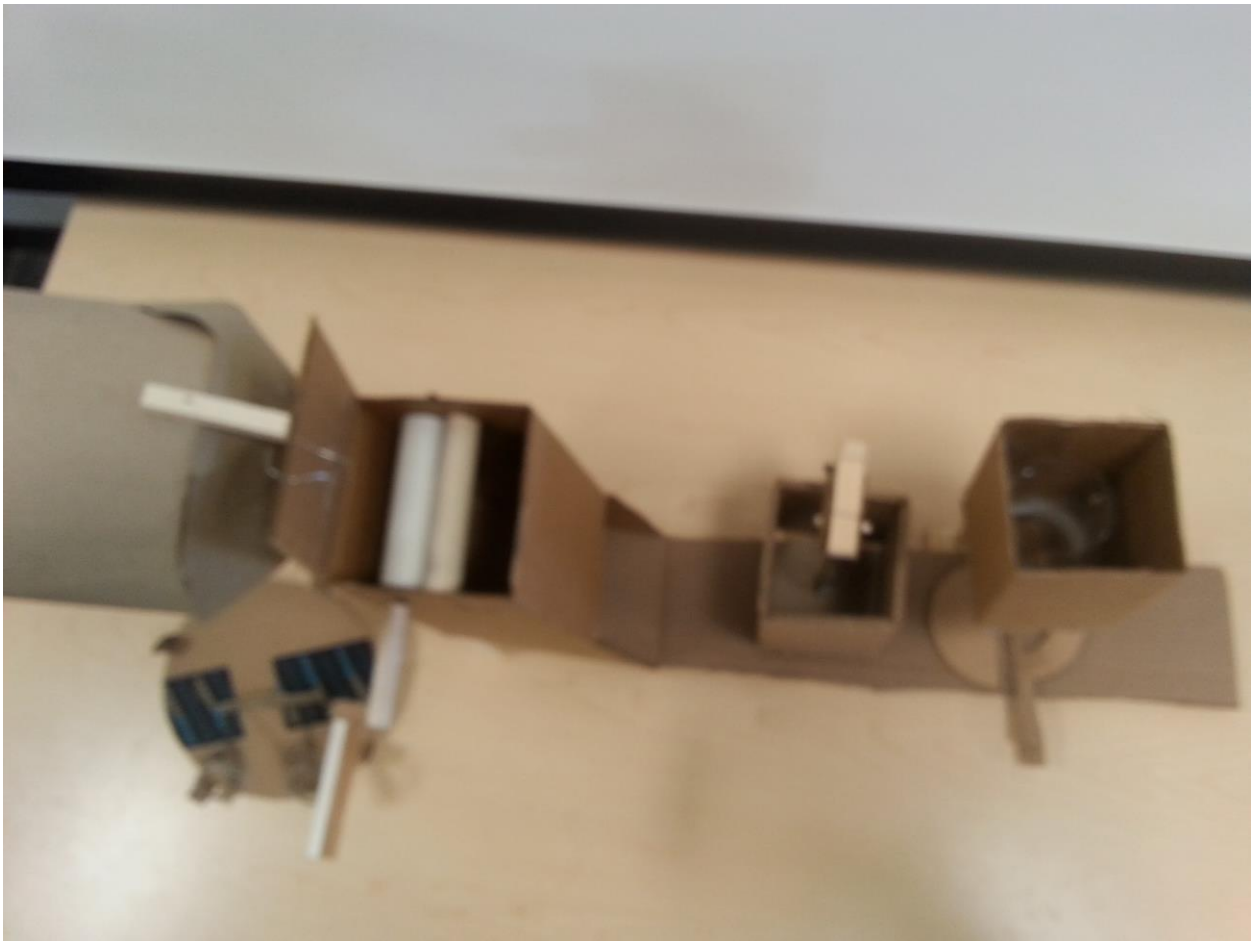

FIG.10

FIG.11

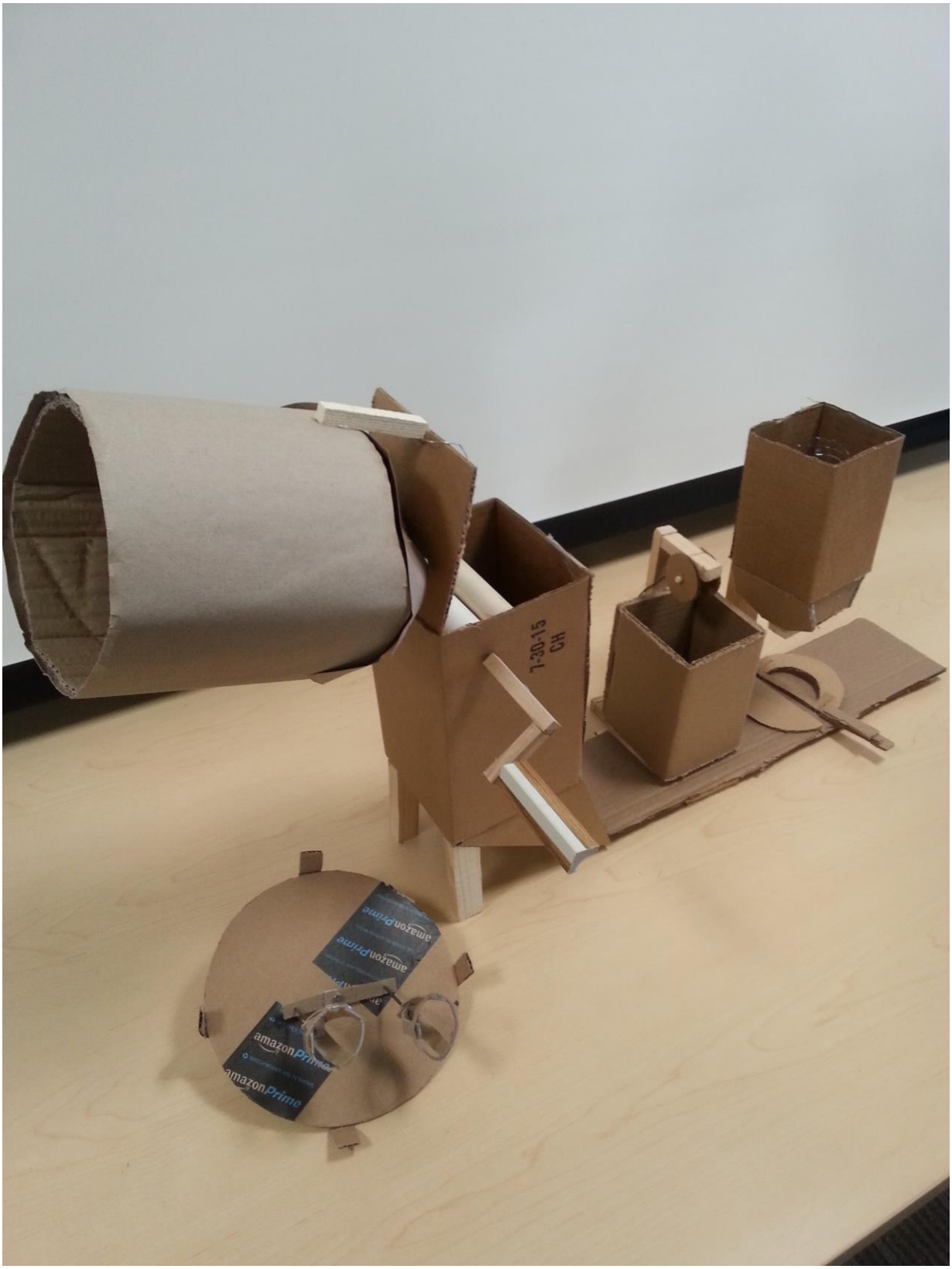

FIG.12

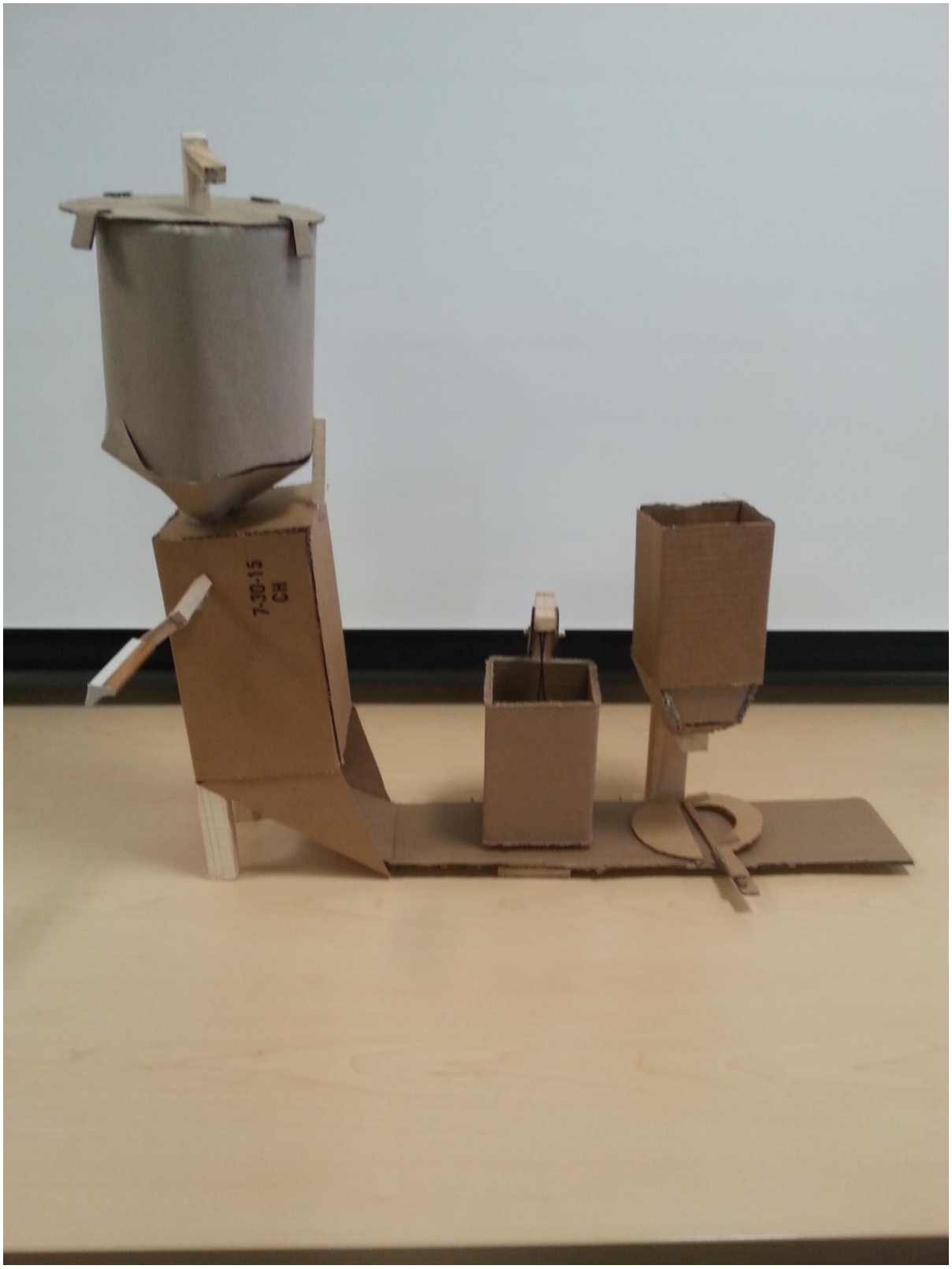

FIG.13

Operation Instructions

The Dumpling Chef is operated either semi-automatic or automatic.

Semi-automatic Operation Instructions:

- Insert pre-made dough through the lid in which flattens the dough.
- Then the dough is cut through the cutter
- Use switch to squeeze out filling which is then added onto the dough.
- Move dough over to folder and flip the switch to fold the dumpling.

Automatic Operations Instructions:

- Insert water and flour into mixer, use crank to mix the dough.
- use crank to push dough through the rollers
- The conveyor belt will send the dough through the cutter.
- After being cut the conveyor will then move the dough under the filling station in which a switch will cause the filling to be put in the center of the dough.
- It then moves to the folder which has a switch to automatically fold the dumpling.

Working Mechanism

The prototype is designed as a fully automatic and semi-automatic dumpling maker. The only difference is it depends on whether the dough for the dumpling is prepared or not. If the dough is not prepared, water and flour are added into the mixer which is located above the roller as the first part of the prototype. Once the water and flour are added into the mixer, they will be mixed into a dough. After released the valve between the mixer and the roller, the dough will be pushed into the roller. On the other hand, if the dough is already prepared then the dough can be put into the roller directly through the lid above the roller.

The rolling system is consisted of two cylinders which contains a gap of 1.5 mm thick and 110mm in length. It also consists of a level which requires a manual operation.

After the processing of the proper thickness of the dough, it will be transported to the cutting device through the conveyor belt that leans downward at a 45 degrees angle. Then the cutting device will be operated by the level system powered by the electric motor. Once the dough reached under the cutting circular-blade of a radius of 50mm, the cutter will be released by the level system and cut the dough that will be folded into a dumpling.

The last 2 steps will be the filling and folding of the dumpling. The folder is located below the filing system. Once the rounded dough is transported along the conveyor belt onto the folding device, the conveyor belt will stop. The handle in the filling system will then squeezed the filling inside a container onto the dough and the folder, which powered by the electric motor, will fold the dumpling into the specific shape. Finally the dumplings can be taken out and put on a plate manually.

An advantage of this device is that it can be disintegrated into 5 parts of the prototype which make it easier to clean and store after the dumplings were made.

Cost analysis

Mixer:

Mixing blade: 0.25 kg of steel - 0.5 USD
Mixing container: Plastic cylinder -3 USD

Roller:

Rolling container: Plastic rectangle- 3 USD
Rolling cylinder: Steel cylinder pipe X 2 - 1 USD
Level: plastic sticks X3 – 2 USD

Cutter:

Cutting edge: Small steel plate - 2 USD
Level system: Small electric motor - 5 USD
Switch - 0.95 USD
String pulley system - 4.35 USD

Folding device:

Folder: Semicircle steel X2 - 2 USD
Small electric motor - 5 USD
Switch - 0.95 USD
Filling system: Plastic rectangle - 3 USD
Wood handle-1 USD
Squeeze system - 15 USD

Additional

Power supply: 2 blade plug - 13 USD
Wires - 2 USD
Conveyor belt: Plastic - 2.5 USD

Total Cost: 66.25 USD

Conclusion and Suggestion

In order to approach the task of making the best dumpling maker design, the team first came up with several designs. All designs faced a budget of under $200 and must make 10 dumplings per minute. To further the team's design, local restaurants gave more information for customer needs/wants. This information allowed for a specific criteria to fit the customer assessment. Going through the assessment the team determined that the “Dumpling Chef” design showed for the best fit of the criteria. Once the design was determined, constructing of a prototype was in place. During the constructing of the prototype the team faced constraints of materials needed for the product and had to use what resources were available in order to construct the design. To learn from this project, the team could go into more depth of brainstorming to generate more ideas. Also time management played a role in this project which the team will definitely learn from. In conclusion the Dumpling Chef is durable, safe, efficient, and cost effective. The Design Chef can also disassemble for making cleaning easier. The Design Chef is the dumpling maker for you!

Acknowledgement

China Dragon, Chinese Eat In & Take Out, 147 S.Allen Street, State College, PA 16801
Tel.: 814-231-8801

References

Ryan, V. (n.d.). HOW TO WRITE A SPECIFICATION from http://www.technologystudent.com/designpro/spec1.htm