The Pennsylvania State University

Camera Redesign Technical Report

Engineering Design 100 Team #3

Paul Pfeiffenberger **Kwan, Hee Lee** **Sean Munck**

Pfp5016@psu.edu kvl5099@psu.edu swm5376@psu.edu

Fall 2010

Abstract

We needed to redesign the Kodak FunSaver disposable camera in order to better suit reported customer needs. The camera needed to remain profitable for the company, while still benefiting the consumer. The competition of the FunSaver with digital cameras revealed the need for more available photos. We implemented a redesign that would allow the camera to hold more photos, while still remaining profitable. This solution used a slight redesign of the camera housing in order to accommodate a larger film cartridge. This will allow the customer to take more photos with a camera that is still profitable for Kodak.

Introduction

- The purpose of this project is to redesign and show the dissection and examination of the Kodak "Fun Saver single-use camera."
- The Fun Saver is a well-made product and has been in the market for more than 20 years, however, it still has some limitations and problems.
- We tried to find solutions for making a better camera, and this presentation will show you how we redesigned a new 'Fun Saver'.

Mission Statement

The customer wanted many more features but one of the customer needs was for more pictures, the Kodak Fun saver is a disposable that can take 27 pictures with the film it currently has. Unlike the previous design of the film the camera could only take 27 pictures, while our product will be able to take 48 pictures adding 21 pictures to the camera capacity.

Key design features:

- Very minimal price increase
- Almost doubling the amount of pictures

Goals in the Design:

- Same instructions of use
- Lowest cost
- Maintain all the other features of the camera

Estimated selling price for the Kodak Fun saver: $5.77

Price of extra film with casing ≈ $0.75

Price of indent in back casing ≈ $0.02

Estimate Manufacturing price increase ≈ $0.77

Average cost of original product = $5.00

Estimated new cost of product = $5.77

Gather Raw Data	• **Loaded with Kodak 800 speed** • **27 exposure film for pictures** • **23% better pictures compared to any 400-speed film camera.** • **Simple manual flash with 4 to 10 foot flash range.**
Need Statements	Kodak disposable camera provides more exposure film for picture.
Hierarchy	Number of film for pictures Quality of pictures Range of Flash light Speed of picture taking

External Research

There was external research done to understand the customer needs and the estimated costs of adding the new feature.

Customer needs

- More Pictures
- Higher quality flash
- Higher quality picture

Film Specifications

- Biggest bulk order that was found was 400 feet of Kodak film which sold for $125 which equates to 3.5 cents per film exposure.

House of Quality

Relative Importance	Customer Requirements \ Technical Characteristics	Production Cost	No. of Controls	No. of Photos	Size of Camera
Easy To Use	7		+	0	+
Low Cost	7	+	+	+	0
Durability	6	+	0		0
Low Enviro. Impact/Recyclable	4	+		+	+
Image Quality	6	+			
Attractive Design	3	0	0		+
Performance	6	+			

Bill of Materials									
Product Manufacturer/Model Number:									
Date:									
Subtract & Operate Procedure (SOP) Yes or No.				**Force (Energy) Flow Diagram: Yes or No.**					
Part #	**Part Name**	**QTY**	**SOP Effect**	**Function**	**Mass (oz, g)**	**Material**	**Manuf. Process**	**Dimensions**	**Cost**
1	Back cover	**1**	**No**	Protect and house the mechenical and chemical components	**.032**	**ABS plastic**	**Injection Molding**		**0.05**
2	Camshaft	**1**	**No**	Allows part to advance one cycle	**.001**	**ABS plastic**	**Injection Molding**		**0.05**
3	Film advanced gear	**1**	**No**	Allows user to advance film after a picture has been taken	**.004**	**ABS plastic**	**Injection Molding**		**0.10**
4	Film advanced lock	**1**	**No**	Ensures no more than on cycle is advanced	**.001**	**ABS plastic**	**Injection Molding**		**0.05**
5	Film cartridge	**1**	**No**	Provides medium for capturing the image	**.042**	**ABS plastic, contains film**	**Varied**		**0.50**

6	Sprocket	**1**	**No**	Pulls film ahead as film advance wheel is turned	**.001**	**ABS plastic**	**Injection Molding**		**0.10**
7	Frame counter	**1**	**No**	Lets the user know how many pictures they have taken	**.002**	**ABS plastic**	**Injection Molding**		
8	Front cover	**1**	**No**	Protects and houses the components of camera	**.030**	**ABS plastic**	**Injection Molding**		**0.05**
9	Lens	**1**	**No**	Focus light on the film	**.001**	**Glass**	**Injection Molding**		**0.10**
10	Central chassis	**1**	**No**	Holds components of camera in contact with each other	**.040**	**ABS plastic**	**Injection Molding**		**0.20**
11	Lens holder	**1**	**No**	Holds lens in place	**.002**	**ABS plastic**	**Injection Molding**		**0.10**
12	Actuating botton	**1**	**No**	User input actuates componet for one picture	**.004**	**ABS plastic**	**Injection Molding**		
13	Shutter	**1**	**no**	Opens to let light in for image capture	**.001**	**Steel**	**Stamping**		
14	Shutter spring	**1**	**No**	Pulls shutter into place	**.0001**	**Steel**	**Extrusion**		

15	Actuating spring	**1**	**No**	Provides force for one advancement	**.001**	**Steel**	**Forming**		**0.05**
16	View finder	**1**	**Yes**	Allows user to see image that will be captured	**.004**	**ABS plastic**	**Injection Molding**		**0.10**
17	Circuit board	**1**	**No**	Provides flash of light	**.041**	**Electrical compone nts**	**Varied**		**1.80**
18	Battery	**1**	**No**	Source of energy	**.050**	**Battery**	**Varied**		**0.25**
19	Film spool	**1**	**No**	To hold unused film	**.006**	**ABS plastic**	**Injection Molding**		**0.05**
20	Lens cover	**1**	**No**	Holds lens in place	**.001**	**ABS plastic**	**Injection Molding**		**0.05**
21	Bulb cover	**1**	**Yes**	Cover bulb flash	**.001**	**ABS plastic**	**Injection Molding**		

Visuals: Component pictures, and solid models

Camera and Packaging

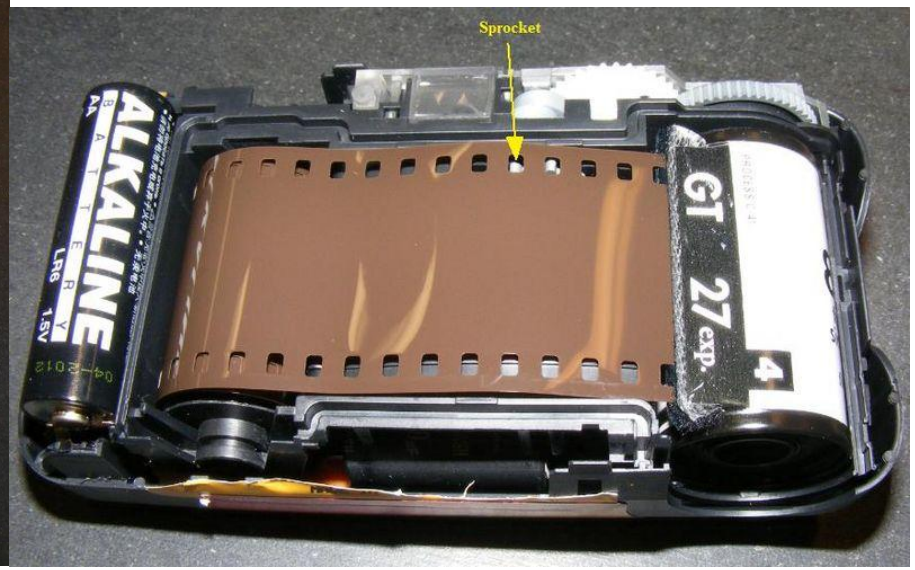

Camera with Rear Housing Removed

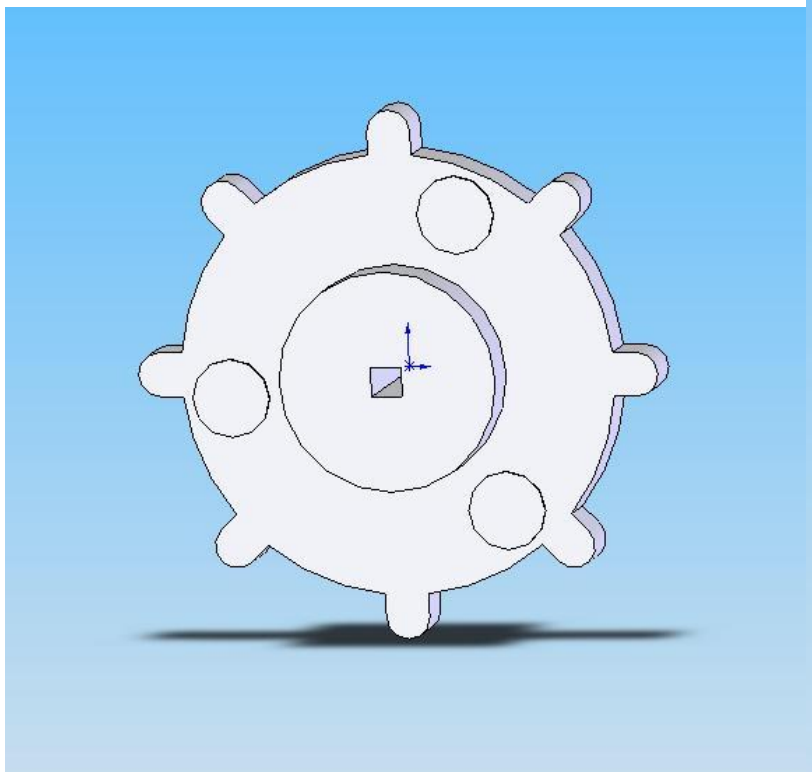

Sprocket

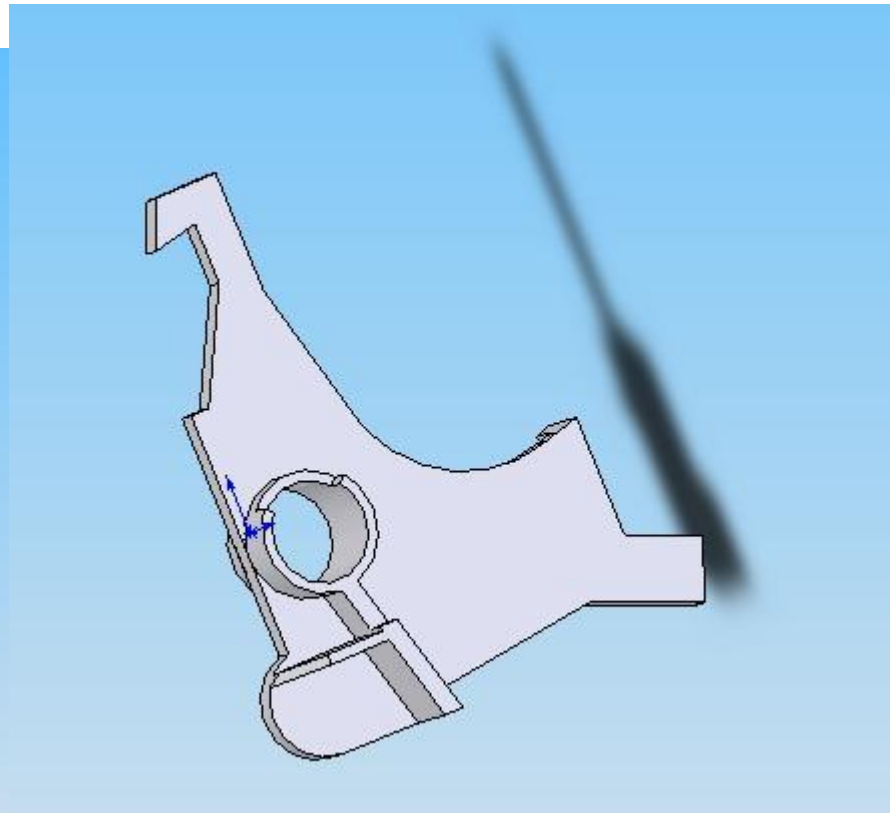

Film Advance Lock

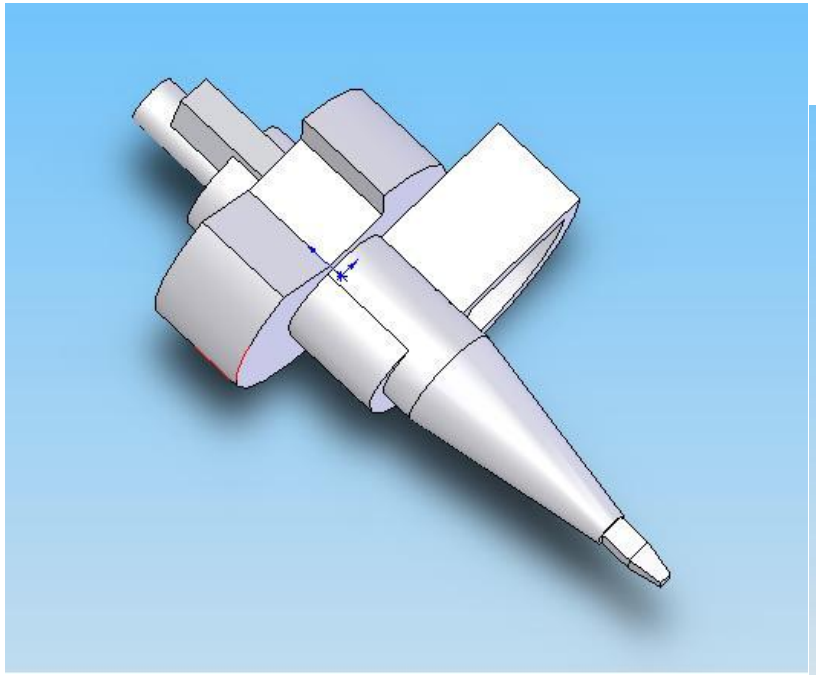

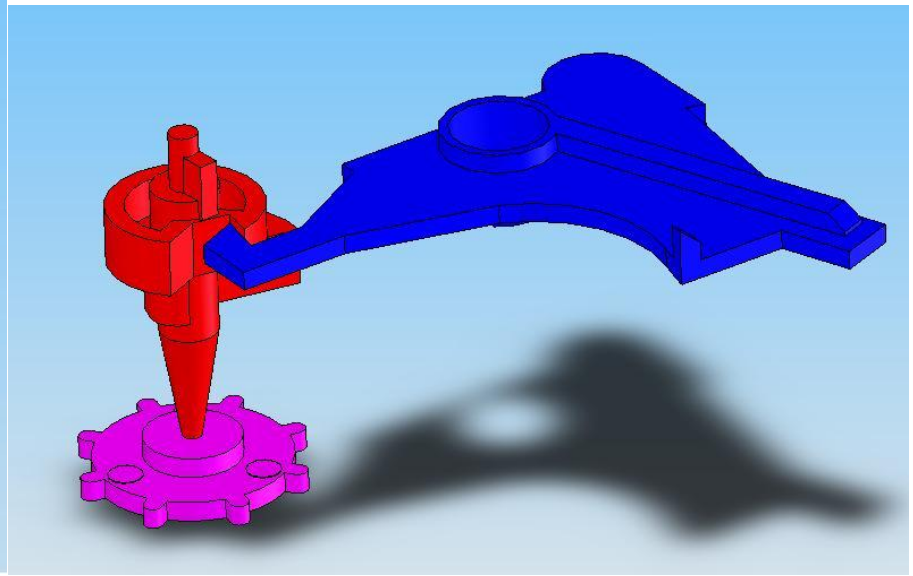

Camshaft

Film Advance and Lock Assembly

Component, subassembly, assembly hierarchy:

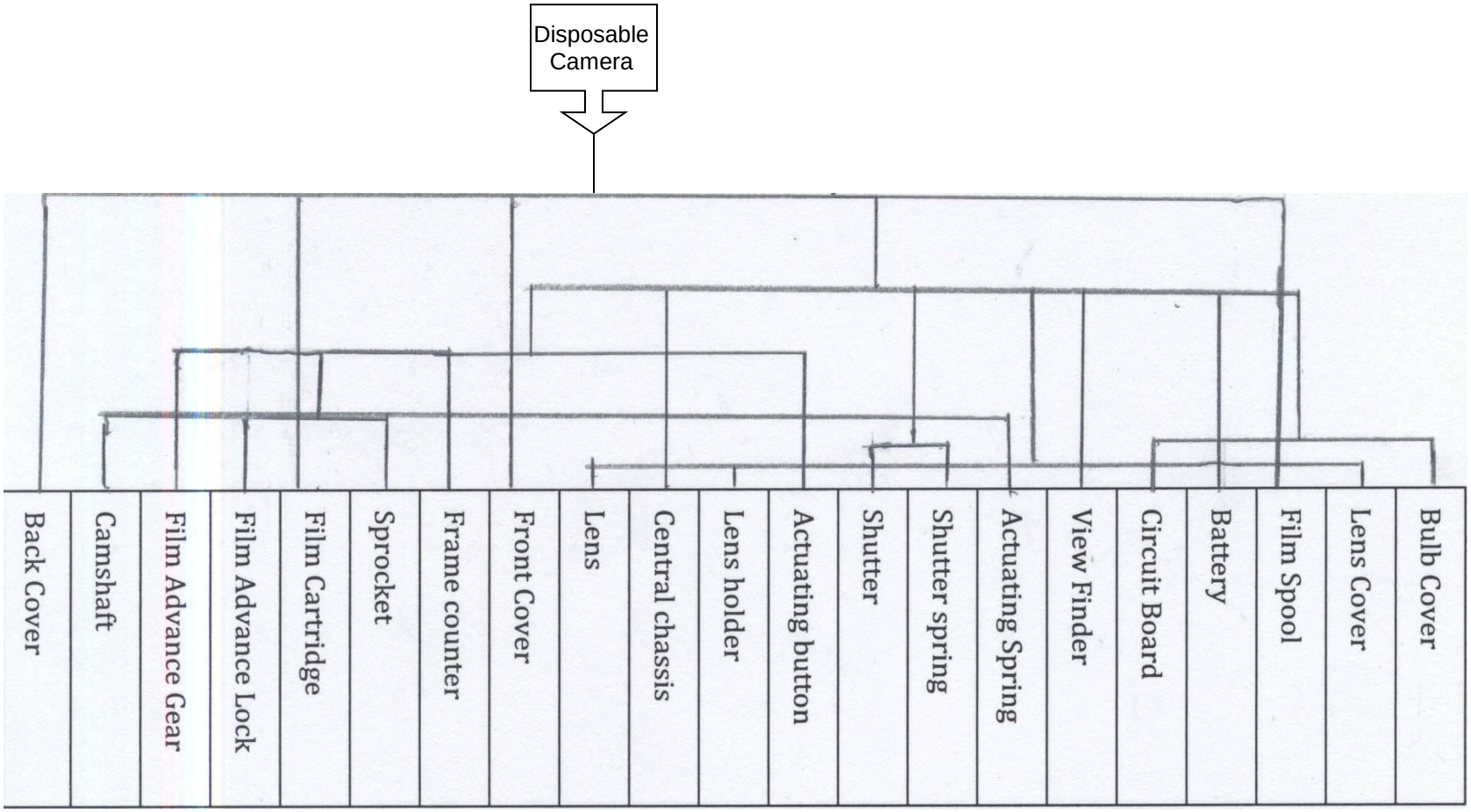

Assembly Level

Sub-assembly Level

Component Level

Product Functional Model

Image Shot

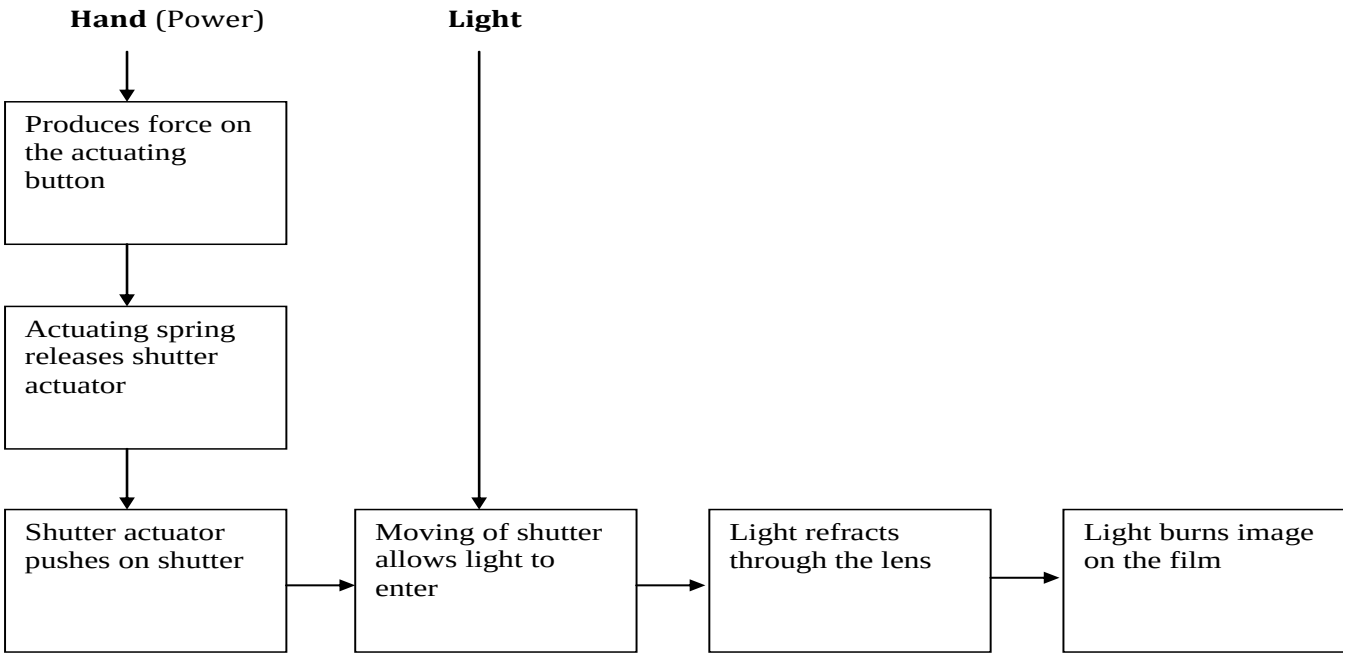

Load and Reload

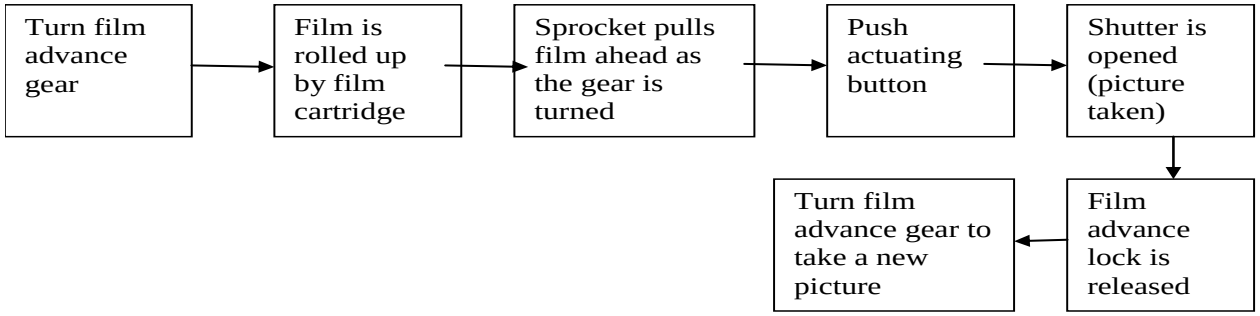

Force Flow Diagram

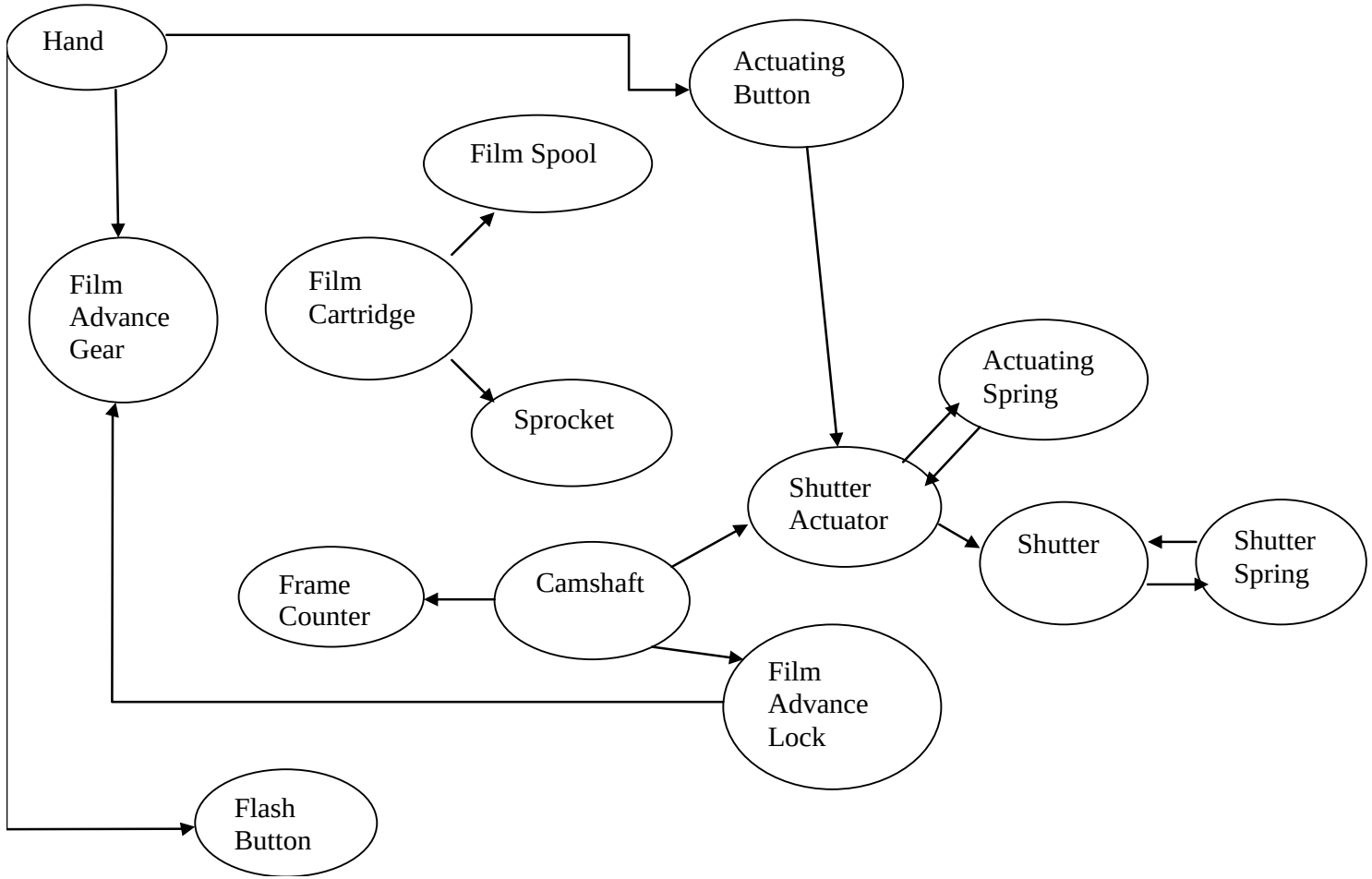

Benchmarking

	Belt Clip	Wristband	More Photos	Larger Capacitor
Cost	0	0	-	-
Durablilty	-	0	0	0
Ease of Use	0	0	+	+
Ease of Disposal	0	0	0	-
Assembly	-	0	0	0
Brighter Flash	0	0	0	+
Larger Quantity of Photos	0	0	+	0
Total 0's	5	6	4	3
Total +'s	0	0	2	2
Total -'s	2	0	1	2
Net Total	-2	0	1	0
	No	No	Yes	No

Concept

We have decided that more pictures on the camera would be most beneficial and the customer would get the highest quality for their amount of money. Implementing more film in the camera would be easy and would only require adding about 5 millimeters to the diameter of the film cartridge. The only change to another part of the camera would be that the back case will need to have a partial extrusion where the film is located. The extrusion will need to allow about 2 millimeters more room to fit the expanded film cartridge and the other 3 millimeters of the new cartridge will fit in the unused space already in the camera casing. The extra film and new cartridge will cost around $0.75 and the extrusion of the back casing will be very meniscal and cost no more than $0.02, leaving the camera with a maximum increase of $0.77. $0.77 is very low considering that the amount of pictures will be almost doubled so it is like buying another camera for only the $0.77.

Final Design

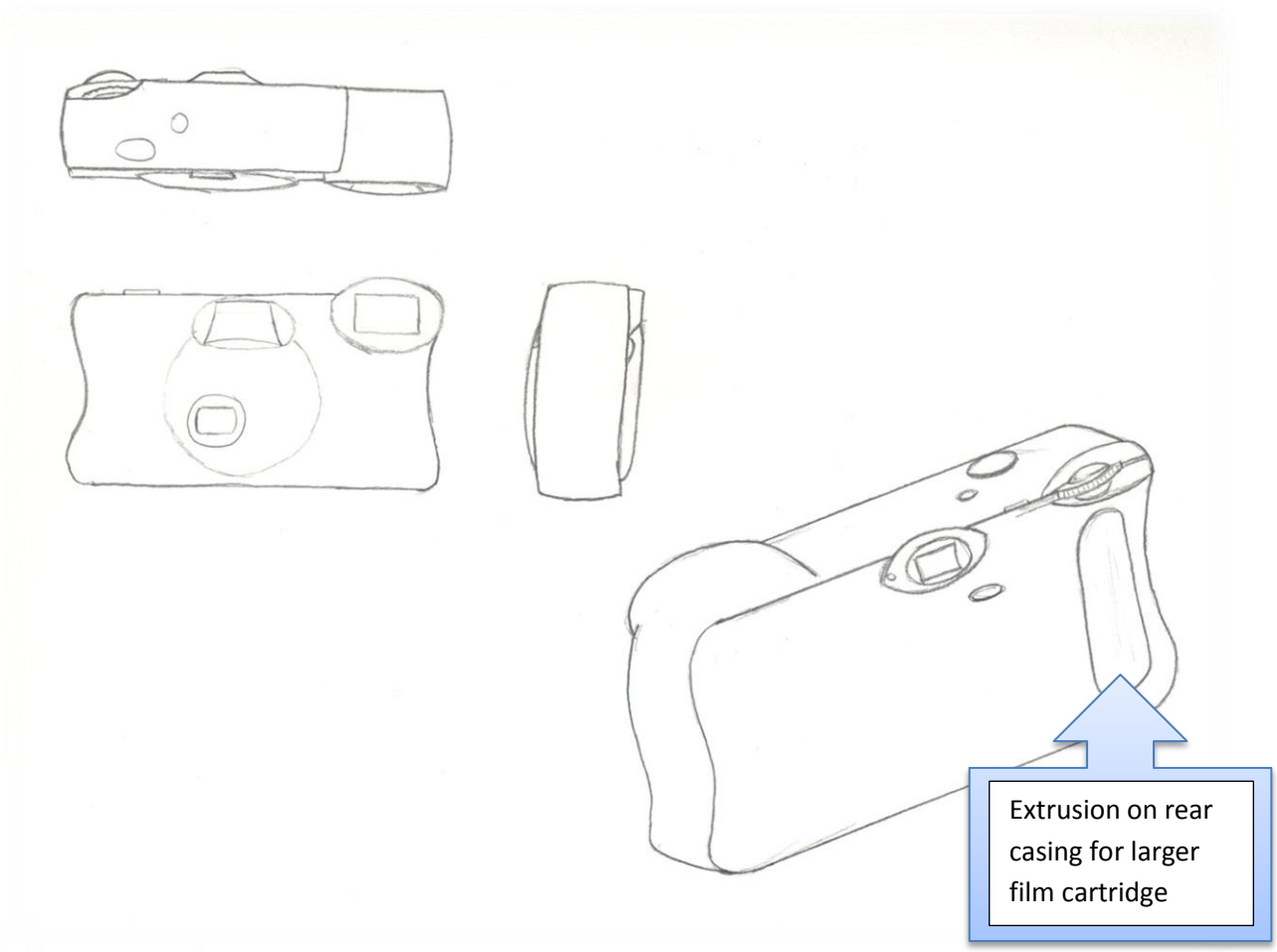

Final Design Description

Our final design, as sketched on the previous page, shows the addition of an extrusion to the rear housing of the camera. This allows the FunSaver to accommodate the larger, 48-photo film cartridge. This redesign is a very low cost option which could greatly improve the appeal of the camera, as well as reduce its negative environmental impact.

Because customers would be purchasing cameras that could hold more photos, they would purchase fewer cameras, saving on both the cost and environmental impact of recycling and reusing the cameras. Although nearly all the parts of the camera are reused, the process of recycling still negatively impacts the environment. Our redesign eliminates some of that impact, creating a more eco-friendly FunSaver.

Conclusions

Our product redesign was successful in its attempt to create a better disposable camera for the customer, while remaining feasible for the company. The addition of 21 photos to the camera came with minimal effect on cost of production, as well as the sustainability of the camera. The redesign is more cost-effective for the customer, and provides an easy way for the Kodak FunSaver to compete with digital cameras.

References

- "Kodak FunSaver Pocket 35mm Film Camera Reviews. Buying Guides & Consumer Product Reviews - Epinions.com." *Reviews from Epinions*. Web. 19 Oct. 2010. <http://www0.epinions.com/reviews/Kodak_FunSaver_Pocket>.
- "Super 16mm Questions [Archive] - IndieTalk - Indie Film Forum." *IndieTalk - Filmmaking Forum - Filmmakers Forum - HD Filmmaking - Cinematography - Screenwriting - Cast - Crew*. Web. 19 Oct. 2010. <http://www.indietalk.com/archive/index.php/t-5955.html>