Our Printer Project

Kevin Johnson, Haroon Choudery,
Nnamdi Ilonzo, Bakhtiyar Shokobayev

Table of Contents

- Problem Statement
- Mission Statement
- Customer Needs
- Design Specs
- Ghantt Chart
- Brainstorming
- Matrices
- Prototype with CAD drawings
- Engineering/Cost Analysis
- Conclusion

Problem Statement

- The method of detecting the velocity of a single sheet of paper and preventing paper jams through the iGen4 is not as efficient as it could be

B

Mission Statement

- To modify the iGen4's measuring devices to maximize productivity and quality of the overall printing process

B

What the customers want:

- The sheet velocity will be between 250 to 750 mm/s
- The paper stock velocity needs to be measured within a tolerance of +/- 0.25%
- Cost effective
- Measurement system will not change the speed of the paper
- 8.5” x 11” paper size
- Step-by-step measurement procedure

H

$$\frac{110 \text{ paper}}{1 \text{ min}} \cdot \frac{1 \text{ min}}{60 \text{ secs}} \approx 2 \text{ paper/sec}$$

$$V = \frac{s}{t} \quad 2 \cdot \frac{28 \text{ cm}}{1 \text{ sec}} = 56 \text{ cm/sec}$$

$$56 \frac{\text{cm}}{\text{s}} \cdot \frac{1 \text{ m}}{100 \text{ cm}} = \boxed{0.56 \text{ m/s}}$$

H

Design Specs

- Dimensions: Has to fit inside a current iGen4 printer
- Location: before paper enters the ink applying section and when it leaves
- Materials: improved quality as to have longevity
- Able to resist external forces within the machine

N

“Managing” our time wisely…

	Task Mode	Task Name	Text1	Text2	Text3	Duration	Start	Finish	Predece
1		Design Process (Tasks)	Substask	Methods	Name	1 day	Mon 10/17/11	Mon 10/17/11	
2		Recognize the Need							
3		Define the Problem							
4			Define the primary market		Everyone	1 day	Mon 10/17/11	Mon 10/17/11	
5			Define the Secondary market		Everyone	1 day	Mon 10/24/11	Mon 10/24/11	
6			Research the Constrains			2 days	Mon 10/24/11	Tue 10/25/11	
7			Define Stakeholders			1 day	Mon 10/24/11	Mon 10/24/11	
8			Research Customer Needs			1 day	Mon 10/24/11	Mon 10/24/11	
9				Online Forum		5 days	Mon 10/24/11	Fri 10/28/11	
10				Interview		1 day	Mon 10/24/11	Mon 10/24/11	
11				FAQ page		1 day	Mon 10/24/11	Mon 10/24/11	
12			Research benchmarking			1 day	Mon 10/24/11	Mon 10/24/11	
13			Define the target Specs			1 day	Mon 10/24/11	Mon 10/24/11	
14		Gathering Information				23 days	Sat 10/1/11	Tue 11/1/11	
15			Send email to Xerox			1 day	Mon 10/17/11	Mon 10/17/11	
16			Internet forum			5 days	Mon 10/24/11	Fri 10/28/11	
17			take apart printer			1 day	Mon 10/17/11	Mon 10/17/11	
18			visit iGen4 operators on campus			1 day	Mon 10/17/11	Mon 10/17/11	
19			All info gathered			16 days	Tue 11/1/11	Tue 11/22/11	
20		Choose 1 of problems	Lab report online done			4 days	Fri 11/18/11	Wed 11/23/11	
21			Velocity Regulator			1 day	Mon 10/17/11	Mon 10/17/11	
22									
23			Prototype Brainstorming			15 days	Sat 10/29/11	Thu 11/17/11	
24			Prototype done			7 days	Fri 11/25/11	Sat 12/3/11	
25			CAD prototype			4 days	Fri 11/25/11	Wed 11/30/11	
26		Practice Oral Presentation				2 days	Sat 12/3/11	Sun 12/4/11	
27		Website				18 days	Thu 11/10/11	Sun 12/4/11	
28		Completely Finish Project				1 day	Mon 12/5/11	Mon 12/5/11	
29		Choose Winner of Presentation				1 day	Mon 12/5/11	Mon 12/5/11	
30									
31									
32									

Brainstorming Ideas

- Kazakh Wind Sensor
- Laser Sensor
- Sonar Sensor
- “Spinny-Wheel Thing”
- Electromagnetic Rod

K

$$V = \frac{d}{t} = \boxed{\frac{11\,in}{(t_1 - t_0)} = V}$$

K

KAZAKH WIND SENSOR

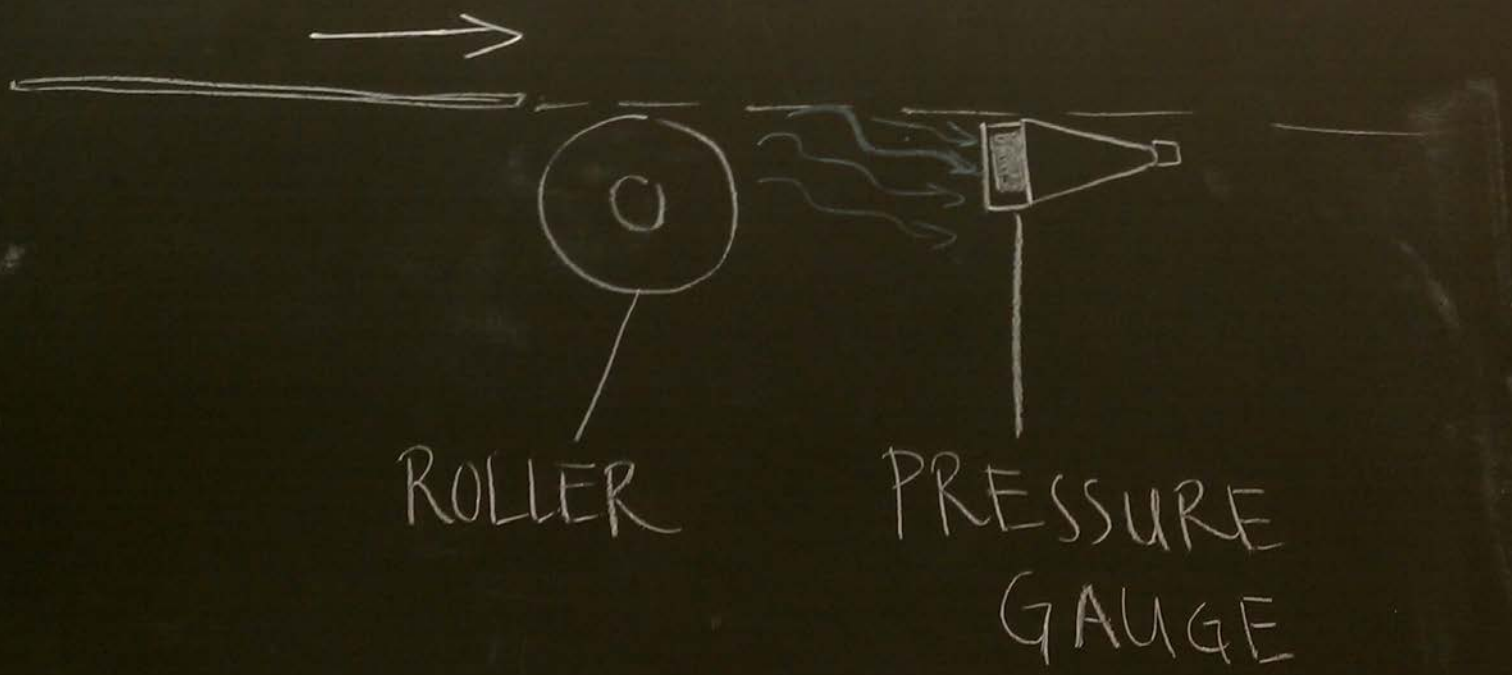

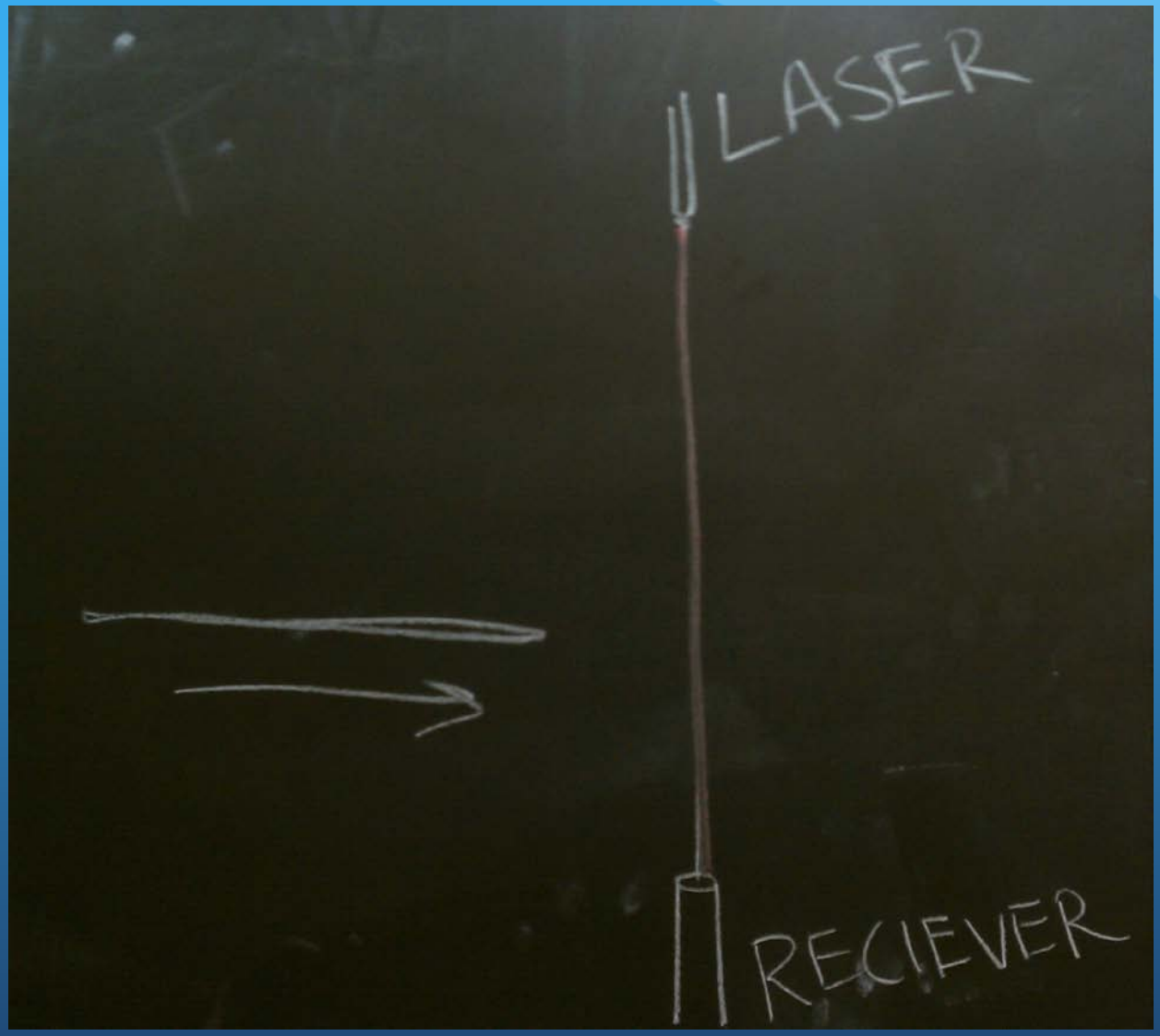

H

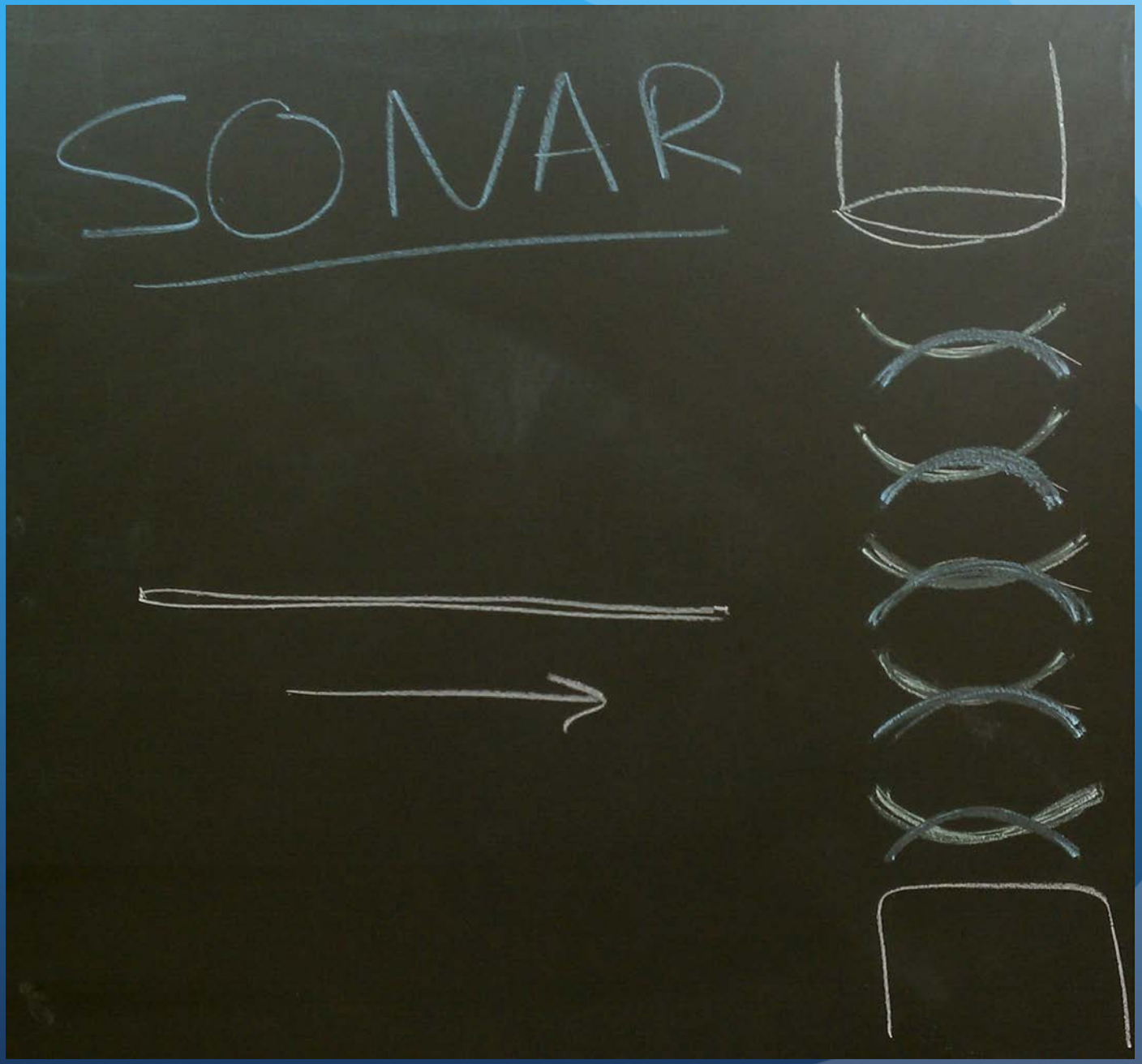

N

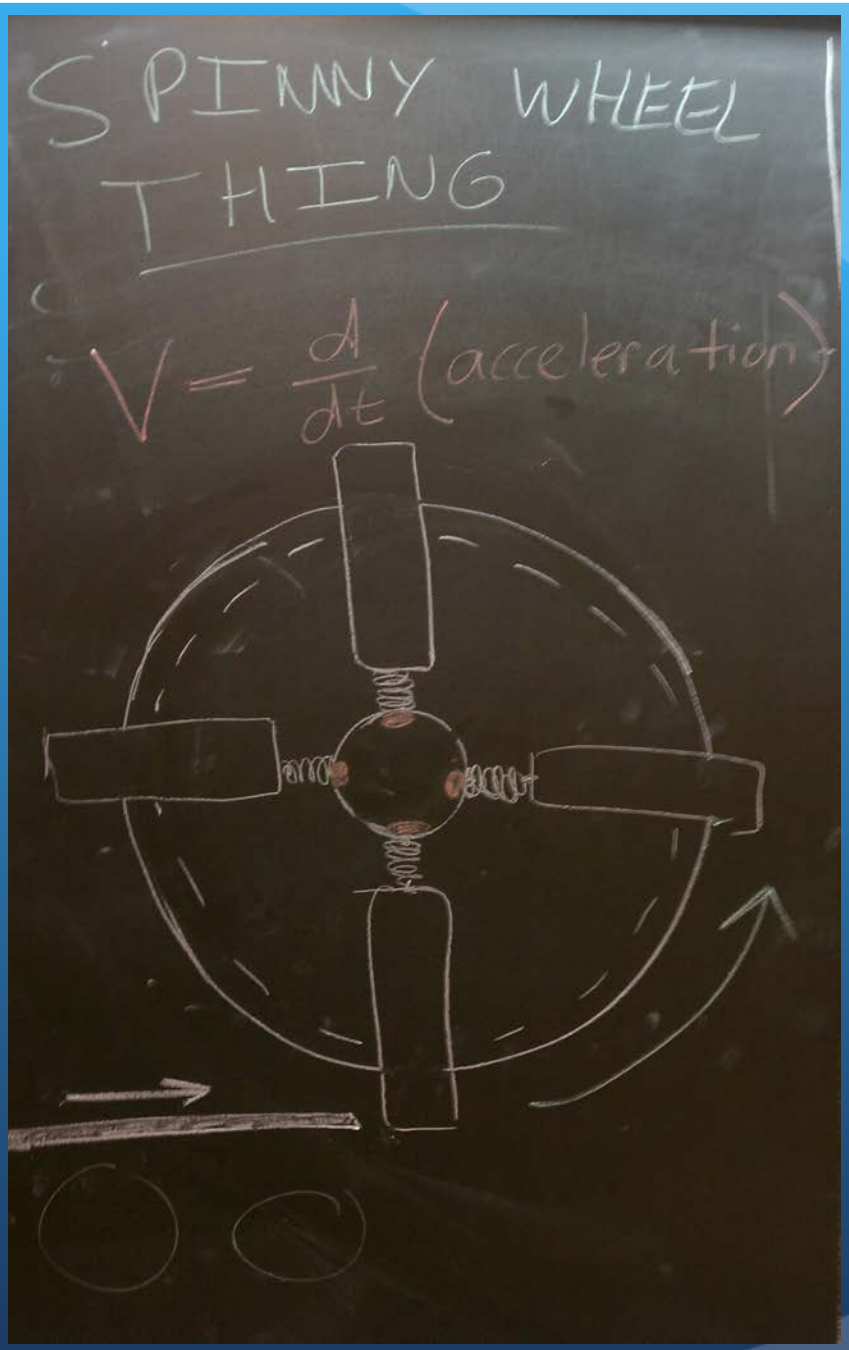

K

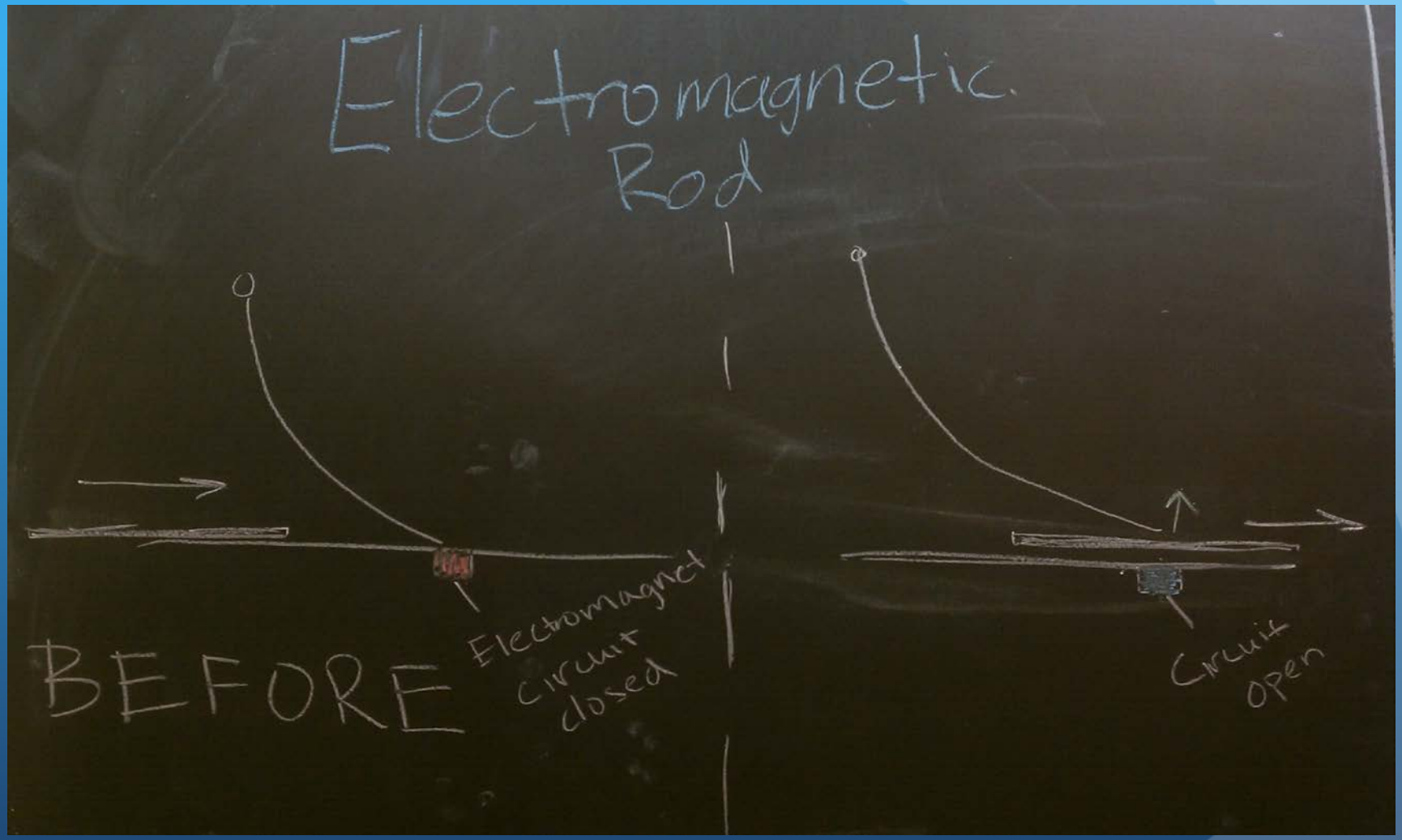
Electromagnetic
Rod
BEFORE
Electromagnet
circuit
closed
Circuit
open

K

Screening Matrix

	Laser sensor	Variable primary roller	Sonar sensor	Air pressure sensor	Metal rod thing
Durability	+	-	+	+	0
Materials	0	-	0	+	+
Cost	0	-	0	-	+
Sensitivity (accuracy)	+	0	+	+	+
Precision	+	-	0	-	+
Protect against external forces	+	+	+	-	+
Reparability	-	0	-	+	+
Hazards ()	+	-	0	+	0
Deters quality of image	0	-	+	+	-
functionality	+	-	0	0	+
Total +	6	1	4	6	7
Total -	1	7	1	3	1
Total	5	-6	3	3	6

H

Weighted Matrix

	Weight	LED Laser		Variable Primary Roller		Sonar Sensor		Wind air pressure sensor		Metal Rod Thing	
		Rating	Weight	Rating	Weight	Rating	Weight	Rating	Weight	Rating	Weight
Durability	10%	3	0.3	5	.5	2	.2	3	.3	4	.4
Materials	5%	2	.1	4	.2	3	.15	2	.1	4	.2
Cost	10%	4	.4	3	.3	4	.4	3	.3	4	.4
Sensitivity	10%	4	.4	3	.3	3	.3	4	.4	4	.4
Precision	20%	5	1.0	3	.6	4	.8	4	.8	5	1.0
Protect against external forces	5%	2	.1	1	.05	5	.25	5	.25	2	.1
Repairability	10%	3	.3	2	.2	3	.3	4	.4	3	.3
Hazard (pinch)	5%	1	.05	1	.5	3	.15	3	.15	1	.05
Deters quality of image	10%	4	.4	2	.2	3	.3	4	.4	2	.2
functionality	15%	4	.6	3	.6	2	.3	3	.45	4	.6
Total			3.65		3.3		3.15		3.55		3.65
Score			1		3		4		2		1

Why it’s the best

- Cheap
- Durable
- Long lasting
- Is not prone to corrupt data (UV light vs visible)
- Very accurate AND precise
- Takes up small volume of space
- VERY easy to repair

B

Design drawings

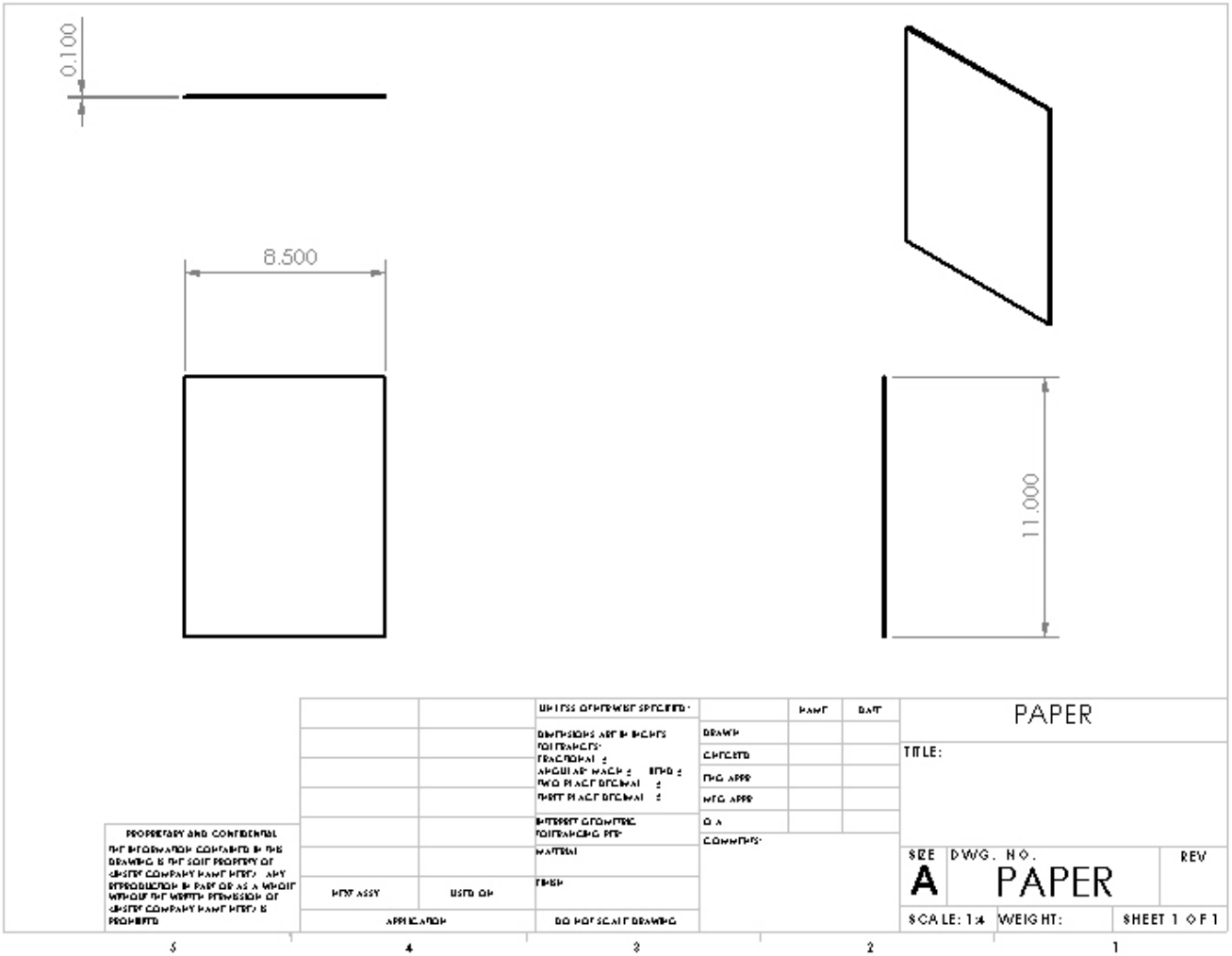

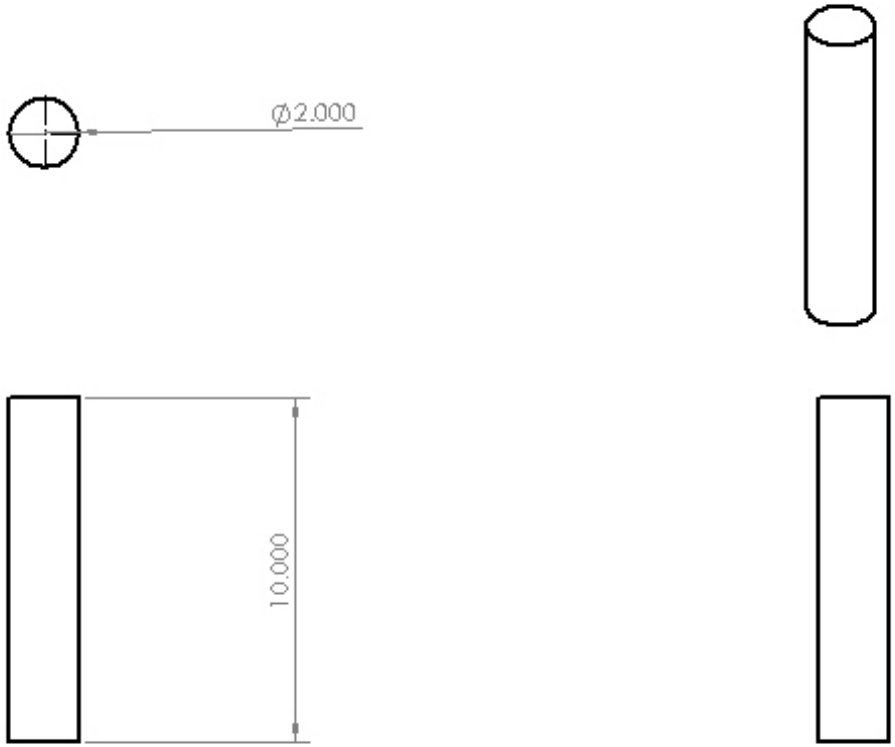

		UNLESS OTHERWISE SPECIFIED:		NAME	DATE
		DIMENSIONS ARE IN INCHES TOLERANCES: FRACTIONAL ± ANGULAR: MACH ± BEND ± TWO PLACE DECIMAL ± THREE PLACE DECIMAL ±	DRAWN		
			CHECKED		
			ENG APPR		
			MFG APPR		
		INTERPRET GEOMETRIC TOLERANCING PER:	Q A		
		MATERIAL	COMMENTS:		
NEXT ASSY	USED ON	FINISH			
APPLICATION		DO NOT SCALE DRAWING			

TITLE:

SIZE	DWG. NO.	REV
A	ROLLERS	
SCALE: 1:4	WEIGHT:	SHEET 1 OF 1

PROPRIETARY AND CONFIDENTIAL
THE INFORMATION CONTAINED IN THIS DRAWING IS THE SOLE PROPERTY OF <INSERT COMPANY NAME HERE>. ANY REPRODUCTION IN PART OR AS A WHOLE WITHOUT THE WRITTEN PERMISSION OF <INSERT COMPANY NAME HERE> IS PROHIBITED

5 4 3 2 1

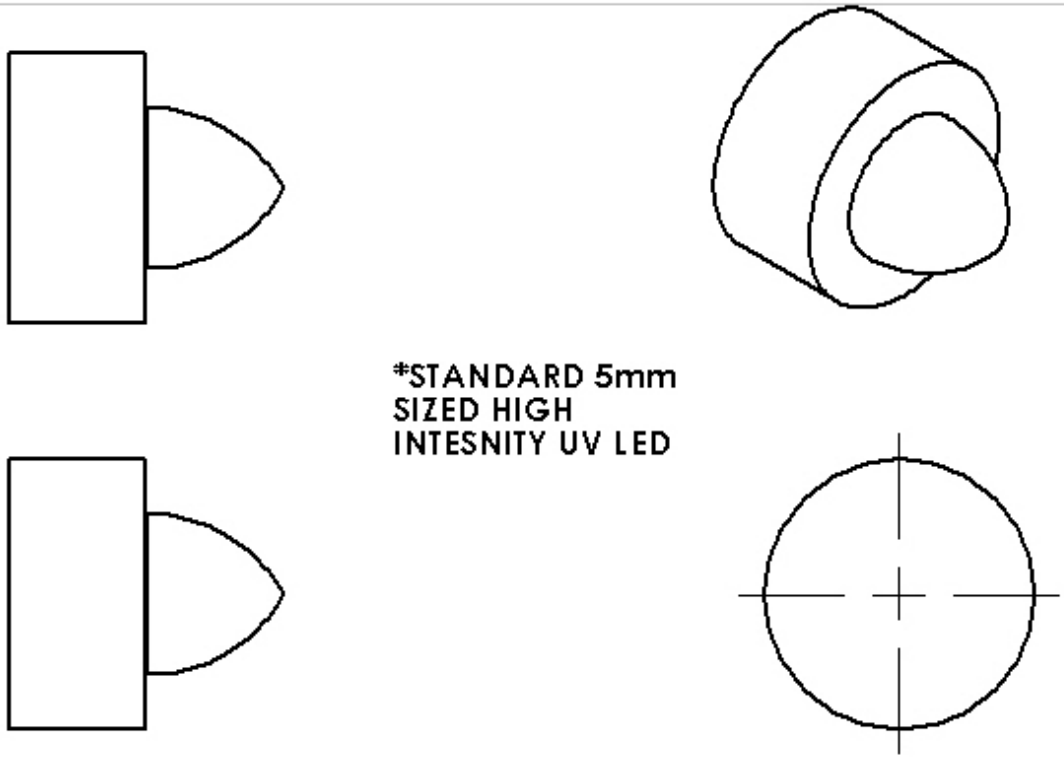

		UNLESS OTHERWISE SPECIFIED:		NAME	DATE
		DIMENSIONS ARE IN INCHES TOLERANCES: FRACTIONAL ± ANGULAR: MACH ± BEND ± TWO PLACE DECIMAL ± THREE PLACE DECIMAL ±	DRAWN		
			CHECKED		
			ENG APPR		
			MFG APPR		
		INTERPRET GEOMETRIC TOLERANCING PER:	Q A		
		MATERIAL	COMMENTS:		
NEXT ASSY	USED ON	FINISH			
APPLICATION		DO NOT SCALE DRAWING			

TITLE:

SIZE A | DWG. NO. LEDLIGHT | REV

SCALE: 2:1 | WEIGHT: | SHEET 1 OF 1

PROPRIETARY AND CONFIDENTIAL
THE INFORMATION CONTAINED IN THIS DRAWING IS THE SOLE PROPERTY OF <INSERT COMPANY NAME HERE>. ANY REPRODUCTION IN PART OR AS A WHOLE WITHOUT THE WRITTEN PERMISSION OF <INSERT COMPANY NAME HERE> IS PROHIBITED.

5 4 3 2 1

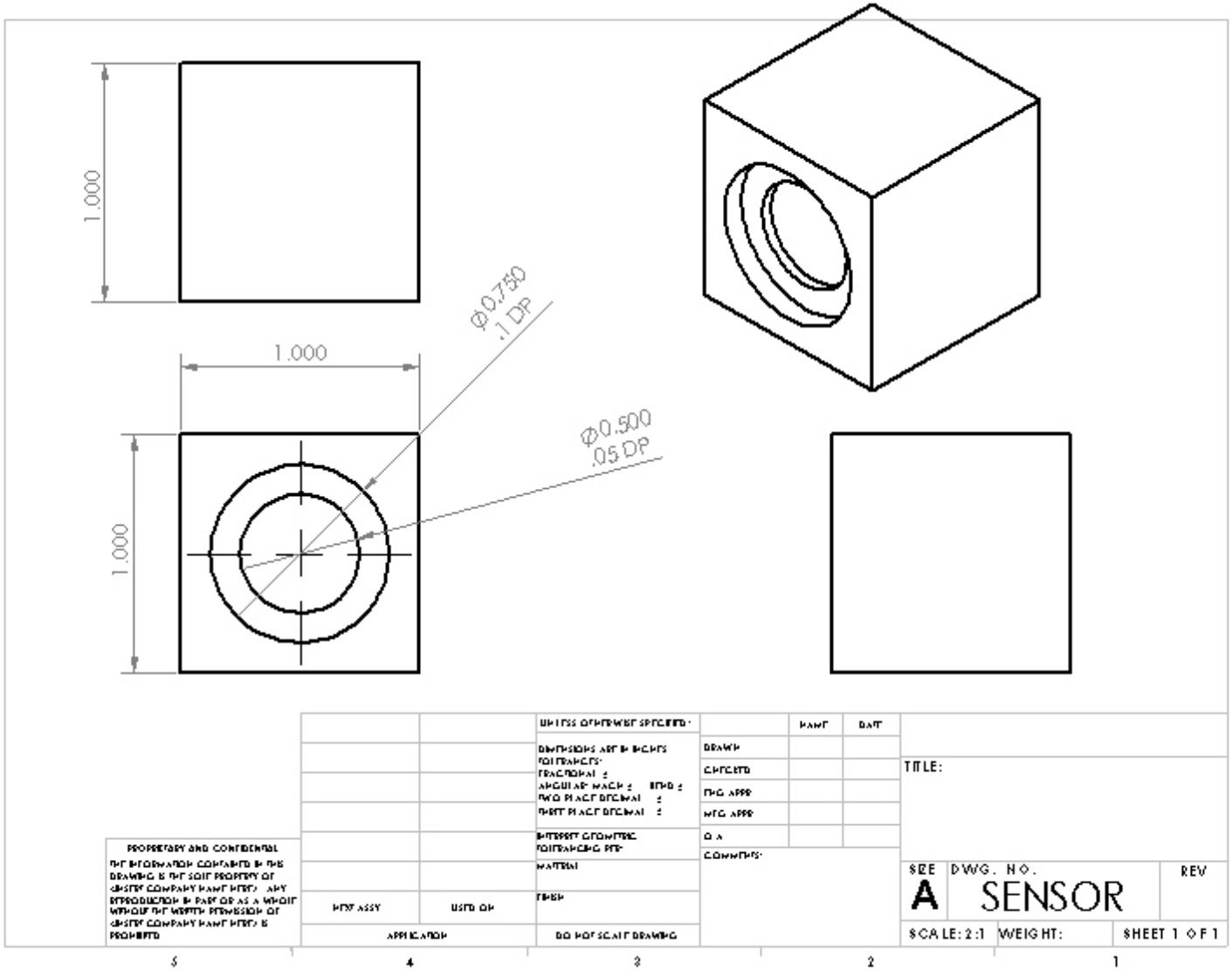
1.000
1.000
1.000
Ø0.750
.1 DP
Ø0.500
.05 DP
TITLE:
SIZE
A
DWG. NO.
SENSOR
REV
SCALE: 2:1
WEIGHT:
SHEET 1 OF 1
DRAWN
CHECKED
ENG APPR
MFG APPR
Q A
COMMENTS:
NEXT ASSY
USED ON
APPLICATION
DO NOT SCALE DRAWING
PROPRIETARY AND CONFIDENTIAL

How this contraption works

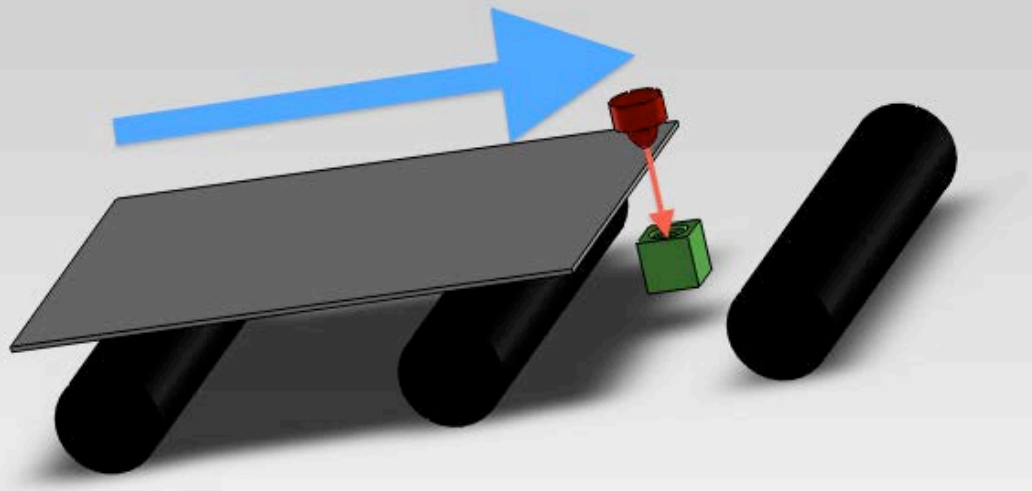

Paper before "scanning":
Photosensor recieving all UV light

K

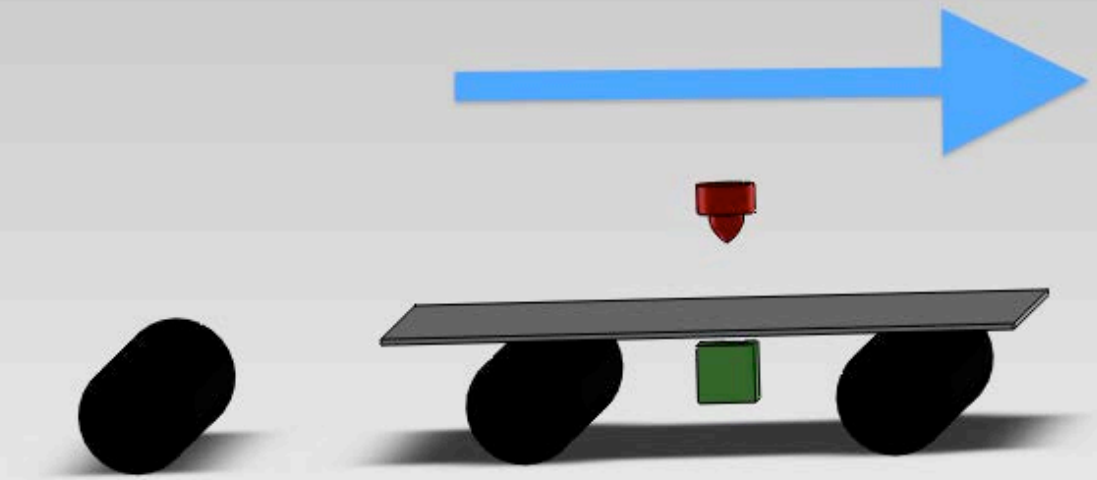

CLOCK

TIMER IS

TRIGGERED

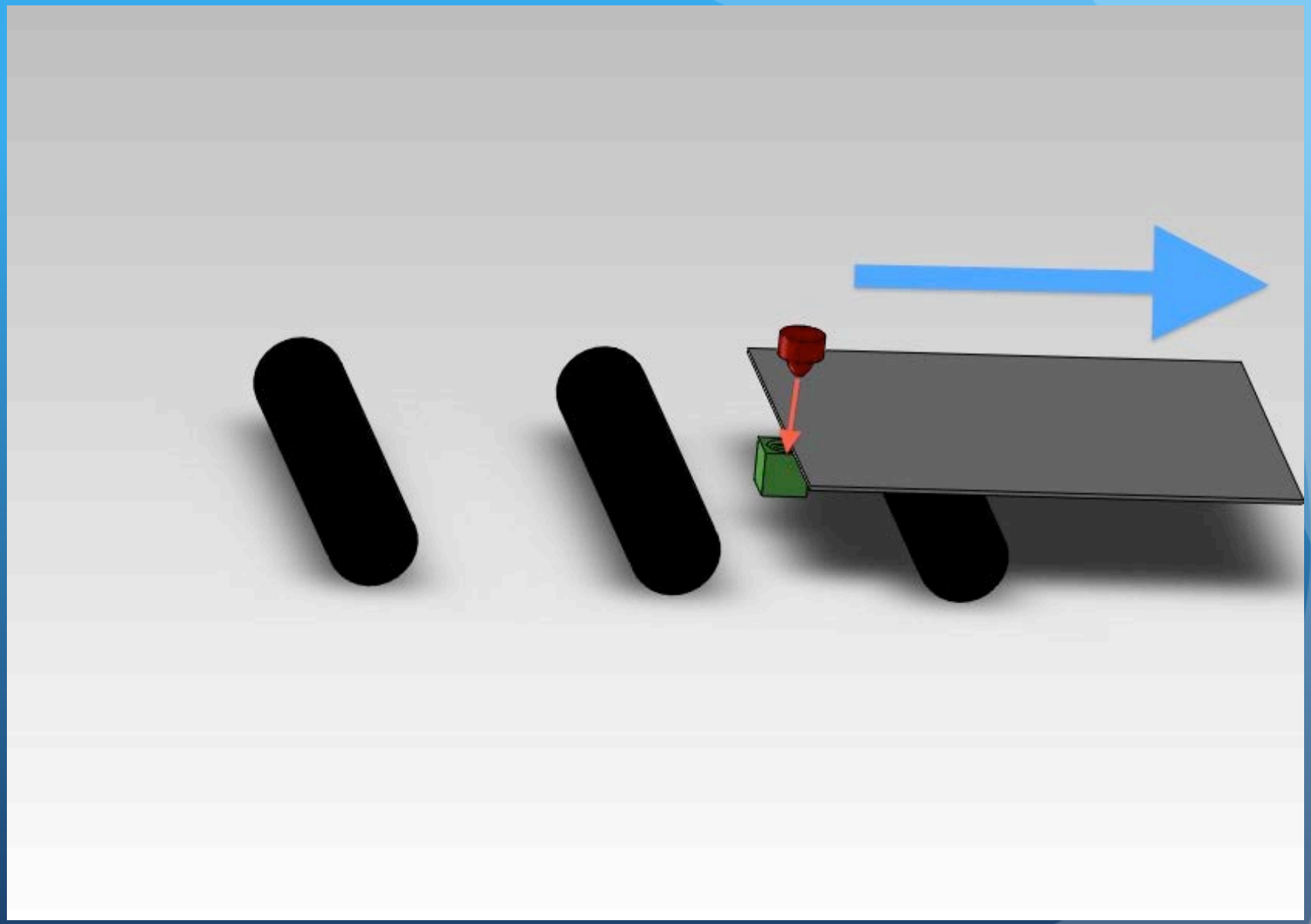

Engineering analysis including cost analysis

- This system is prone to very few failures
  - LED burning out due to too much current
  - LED burning out due to lifespan

Cost analysis:

-LED's range in price from $0.69 upwards to $100

-Photo sensor is roughly $106

-Wiring is less than $100

-dirt cheap to run an LED light (20mA current @ 3.2V)

N

In conclusion…

- If you want a precise and accurate solution to detect the velocity of a piece of paper through an iGen4's printing process….

  …the best possible solution for your bang of your buck is simply an ultraviolet LED with a UV Light photo sensor

H

References:

- www.paperonweb.com
- www.xerox.com
- http://www.vernier.com/products/sensors/uv-sensors/uva-bta/
- http://www.superbrightleds.com/moreinfo/component-leds/5mm-uv-led-15-degree-viewing-angle-380-nm-30mw/632/
- http://en.wikipedia.org/wiki/Engineering_analysis
- http://www.colorprintingforum.com/xerox-iGen/velocity-measurement-instrument-project-6269.html
- http://en.wikipedia.org/wiki/Pressure_sensor
- http://www.amazon.com/Ashcroft-Industrial-Digital-Pressure-200Psi/dp/B001CM22QU/ref=sr_1_4?ie=UTF8&qid=1322612850&sr=8-4
- http://www.documentsolutionsinc.net/upload/stock/product_brochures/igen-220.pdf
- http://www.xerox.com/digital-printing/digital-printing-press/color-printing/xerox-igen4/spec-enus.html

Questions?