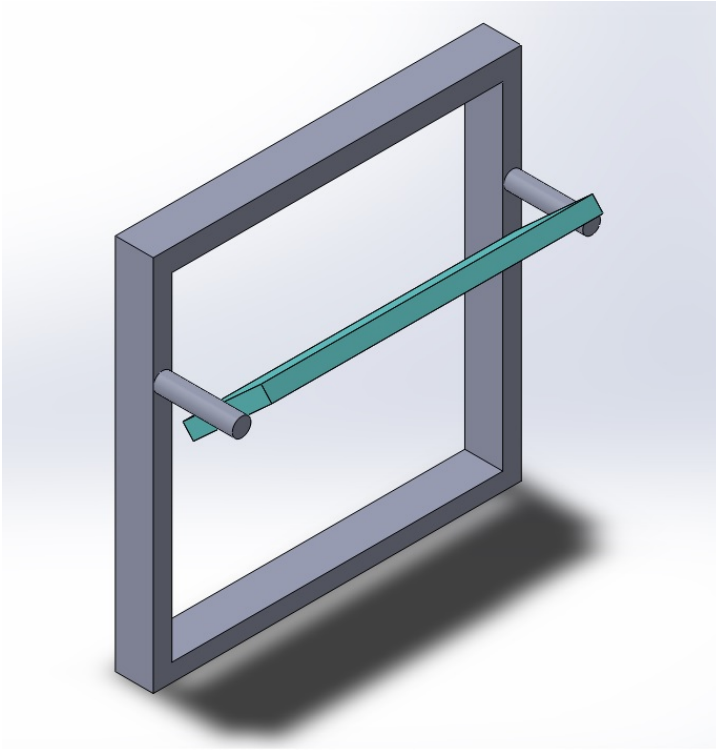

# Alcoa

# East Halls Sustainable Renovation

*Customer-Driven Design Project*


**Group Members:**

Brianna Haglan

Richard Hayward

Nicholas Kappeler

Daniel Guarracino

Eddie Taddei


**Engineering Design 100**

**Section 008**

**11 December 2013**

# Table of Contents

**Introduction** ..... **3**
Who is Alcoa? ..... 3
Background of Aluminum ..... 4
Definition of Sustainability ..... 4
Presenting of Opportunity ..... 4
Background Information on East Halls ..... 5
**Schedule of Project** ..... **5**
Gantt Chart ..... 5
**Design Principles** ..... **5**
Stakeholders ..... 5
Systems Diagram ..... 6
Defining specifications/customer needs ..... 6
Piecewise Comparison/ Weight Determining Matrix ..... 8
**Concept Development** ..... **8**
Brainstorming ..... 8
**Evaluation** ..... **10**
Concept Screening ..... 10
Concept Scoring ..... 11
**Analysis** ..... **12**
Summary ..... 12
Cost Analysis ..... 12
**Prototype Construction** ..... **13**
**Conclusion** ..... **15**
**References** ..... **16**
**Appendix A** ..... **17**

## Introduction

Aluminum is a relatively common material found in most sectors of society. One can find it in households as foil or siding, or on a much larger scale such as in aircraft. Aluminum, then, has become one of the most versatile metals with many beneficial, intrinsic properties. Alcoa Inc., the primary producer of aluminum globally, presented a goal or opportunity for all design teams in Penn State's Engineering Design 100 classes to achieve or take advantage of. The opportunity was to identify opportunities across the campus of The Pennsylvania State University to utilize aluminum's intrinsic properties to increase efficiency and sustainability. Therefore, the first step to this design process is finding that opportunity within the campus. This was achieved primarily through customer needs assessments, benchmarking, and brainstorming. Opportunities deemed beneficial and current such as CATA transit renovations and East Halls renovations were discussed.

### *Who is Alcoa?*

Alcoa is the world's leading producer of aluminum, both primary and fabricated. In addition they are world's largest miner of bauxite, the ore used to make aluminum, and refiner of aluminum. Alcoa has pioneered contemporary aluminum production. Their innovation has been felt in all corners of industry from aerospace to consumer electronics. Alcoa produces a myriad of aluminum products, offering cheaper and more efficient alternatives to traditional steel and other metals.

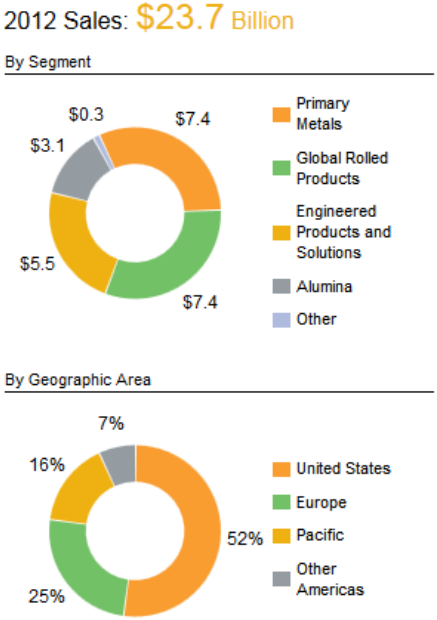


**Figure 1: Distribution of Markets**

Alcoa is focused on sustainability, a requirement in all of their products that means recycling as much of their product as possible. Due to this, 75 percent of all aluminum produced since 1888 is recycled and still in use. Alcoa employs 61,000 people in 30 countries.

***Background of Aluminum***

Aluminum is a very versatile metal that is used and manipulated for many industries. The process of making aluminum starts with the mining of bauxite, the raw material that is refined. The bauxite is then refined using the Hall-Heroult process to produce alumina. Alumina is then used to create the aluminum used in multiple markets around the world. It takes approximately 4 tons of bauxite to produce 2 tons of alumina. Also, 2 tons of alumina produce one ton of aluminum. This process is extremely energy intensive and many of the world's largest bauxite deposits are located outside the United States. Some properties of aluminum include lightweight, conductivity, reflectivity, corrosion resistance, and recyclability.

***Definition of Sustainability***

The specific definition of sustainability for this project contains excerpts from multiple uses of the word. In the context of this project, sustainability will be defined as possessing a quality that meets current societal needs and improves the life cycle of a said process or product. However, this improvement must not inhibit future generations from meeting their respective needs. This is a rather difficult task, subsequently due to the inability to predict with complete accuracy the needs of tomorrow.

***Presenting of Opportunity***

After much deliberation on which opportunity would satisfy the goal/opportunity set forth by Alcoa, it was collectively decided to go forth with the opportunity to increase sustainability of East Halls through the use of aluminum's intrinsic properties.

### *Background Information on East Halls*

According to an article in PennLive.com, Penn State OPP plans to renovate East Halls in order to keeps prospective students interested in coming and living at Penn State. Plans for the renovations include central air conditioning, a conversion of the common bathrooms into smaller, individual bathrooms, and wireless service in the dorms. The buildings in East Halls were built in the early 1960s and have remained relatively unchanged throughout the years. These renovations would affect over 4,000 students who live in east halls, according to an article in voicesweb.com. According to the Penn State OPP, the renovations for East Halls will begin as early as 2015, and will progress at a rate of 2 buildings renovated per year. It will come at a cost of $150 million. See Appendix A for graphs.

## Schedule of Project

### *Gantt Chart*

Reference Gantt Chart on the last page of the report.

## Design Principles

### *Stakeholders*

The key in any design implementation plan is to know who will be affected by its outcome. In the case of renovating East Halls, after much thought and consideration, the team has come to recognize the key stakeholders in this project. They include, but are not limited to: Alcoa Inc., Penn State OPP, undergraduate and postgraduate students and faculty, construction contractors, legal department, researchers, environmental groups, waste management, local Centre County residents, and local businesses. Also, those affected in a management sense include: project team, budgets holders, and senior and department management. The feedback

from these groups is critical in determining a design plan that will benefit the most amount of people possible.

***Systems Diagram***

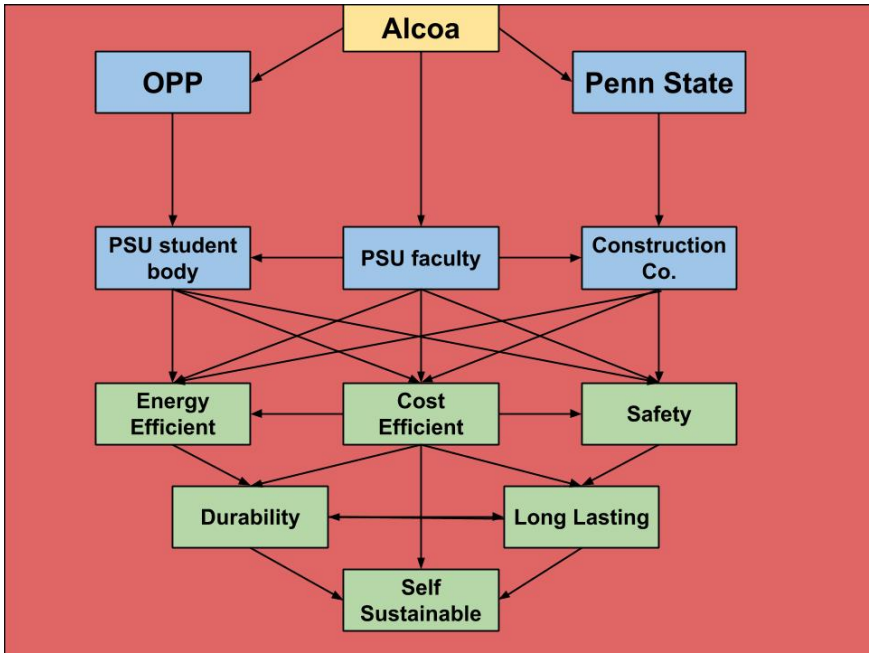


***Defining Specifications/Customer Needs***

Following the design process, it was important that certain principles were established. These principles are the basis on which concepts are evaluated and narrowed to achieve the most applicable and effectual project. Design principles followed basic customer-needs material generated by Alcoa. On its website, Alcoa published that the company needs the project to: recognize opportunity, examine inputs and outputs, utilize common materials for product development, investigate societal conduct, and ensure end results meet safety and state standards. This need is coupled with the need of Penn State's Office of Physical Plant, otherwise known as OPP. The reason this project holds importance is based on the needs of OPP. They want to "mine" the ideas of PSU students in the hopes of implementing these concepts of sustainability around campus. To benefit the OPP, it was decided that the design project would supplement an already

existing venture the OPP was pursuing, that is, East Halls. Penn State wants to show that the students are impacting the campus, and in this case making it better for a more sustainable future.

As for the evaluation of concept development, design concepts were determined based off of the information given by Alcoa. Such concepts included: efficiency in terms of energy, marketability, cost effectiveness, durability, and safety. These each can be quantified and applied to the concepts generated in the concept development stage of the design process. The matrices for the amount of weight given to each specification can be viewed below.

Any concept developed must be energy efficient and sustainable, since sustainability is the overarching theme of this project. Therefore, any design must use less energy than the previous design or that of a similar product. Also, each kilogram of aluminum used should save equal to or greater than 60.8 kilowatt-hours, as this is the amount of energy needed to produce such a quantity. The process to fabricate aluminum is energy-intensive. As an online source explains, it takes four tons of bauxite to produce two tons of alumina. To obtain the end result of aluminum, it currently takes two tons of alumina to make one ton of aluminum. Essentially, it takes four tons of raw materials to make one ton of aluminum.[1,3] To combat this process, the design will have to make-up for the loss of quantity that is seen during this process.

With efficiency, marketability is also very important for the evaluation of designs. For a product or system to be successful, it must also be marketable. People must endorse such ideas for proper implementation. Feasibly, implementation must be within 5 years of concept development. Designs should also be upgradable. Connected to marketability, cost effectiveness is also a factor to review. To increase marketability, design costs should not exceed the costs of existing ideas. The design should then be made simple as possible with common, cheap, yet durable materials.

To be durable, one must stand the tests of time and the elements. It is important that the designs brought forth during this process are generated to optimize durability and longevity. East Halls were originally built in the 1960s and have lasted around 50 years with minor improvements. Any renovations made, then, must be able to last as long as the current buildings. In conjunction, safety is also a key specification. All designs must meet OPP safety standards.

| Specification | Energy Efficient | Marketable | Cost Efficient | Physical Durability | Safety | Longevity | Row Total | Weight |
|---|---|---|---|---|---|---|---|---|
| Energy Efficient | 1.0 | 1.3 | 1.0 | 0.5 | 0.5 | 2.0 | 6.33 | 0.14 |
| Marketable | 0.8 | 1.0 | 2.0 | 0.5 | 0.5 | 2.0 | 6.75 | 0.15 |
| Cost Efficient | 1.0 | 0.5 | 1.0 | 0.3 | 3.0 | 3.0 | 8.83 | 0.19 |
| Physical Durability | 2.0 | 3.0 | 3.0 | 1.0 | 0.5 | 1.3 | 10.83 | 0.23 |
| Safety | 2.0 | 2.0 | 0.3 | 2.0 | 1.0 | 3.0 | 10.33 | 0.22 |
| Longevity | 0.5 | 0.5 | 0.3 | 0.75 | 0.3 | 1.0 | 3.35 | 0.07 |
| | | | | | | **Total** | 46.43 | |

**Table A: Piecewise Comparison/ Determining Weighted Specs**

## Concept Development

### *Brainstorming*

After gathering information from multiple stakeholders, ideas were generated to satisfy the specifications set forth by the stakeholder. Eight ideas were generated and evaluated.

One way aluminum could be implemented in the renovation of East Halls is through using aluminum siding on the renovated dormitories. This utilizes aluminum's reflective properties to keep the dorms cool during the warmer months, decreasing the use of fans by students, and air-conditioning units in special-living option dorms. These panels would be made out of Alcoa's Reynobond with EcoClean. This product helps to reduce pollutants in the air, making this option environmentally sustainable.

The thought of using aluminum as new roofing in East Halls was also discussed. The roofing would reflect the sun and keep the building cool during warmer months. This would create a socially sustainable environment by keeping students cool, while lowering electric costs of each building.

As part of the renovation process, the elevators in many building are as old as the buildings are, and will need to be replaced or renovated in the near future. Elevators add to the energy usage of the buildings. A way to reduce the amount of energy an elevator requires for lift is to reduce the weight of the cage. Therefore, newer, lighter aluminum elevator cages could replace the older, heavier cages allowing for less energy usage.

Penn State always looks for ways to become more socially sustainable. With the renovation of East Halls, opportunities could be taken to allow the East Halls to become more accessible to handicapped students and faculty. Aluminum handicap ramps could be implemented throughout East Halls as well as the commons to make them more handicapped accessible.

During the brainstorming process, an idea that came to mind was an aluminum trash depositor. The product would be an aluminum-recycling bin, but instead of simply holding the recyclables, it would immediately compress the aluminum for the consumer. All of the added aluminum would continue to be compressed until the depositor reached capacity. Then, when it came time for the depositor to be emptied, there would be tiny pieces of compressed aluminum, therefore making recycling far easier.

With inclement weather being a common occurrence at Penn State, an updated draining and water storage system is worth consideration. The plan would be to make an aluminum water

storage system that would also act as a filtration system. As the rain falls, the system would control the flow of the water buildup and also store the water. The stored water would then feed into a filtration system and be thoroughly cleaned. Once clean, the water would be channeled into the building and be used in its facilities. Another idea concerning the rain at Penn State was an updated gutter and irrigation system. As it rains, the gutters would control the water flow and carry it down the side of the buildings. Once carried down, the system would redistribute the water to critical different areas.

While the sun is the best source of natural light, this light can't reach every corner of every building. However, if an aluminum reflector is added to the windows on a slight angle, then this could potentially illuminate long hallways and dark areas more effectively. This could better utilize the amount of natural light streaming into the room and thus help conserve electricity that would have been used to illuminate these respective areas. Although this product will conserve much energy, electricity will still need to be implemented to power it. However, the reflectors would only operate during the daylight hours and remain dormant during the night.

## Evaluation

### *Concept Screening*

**Table B: Concept Screening Matrix**

| Selection Criteria | Side Paneling | Aluminum Roofing | Elevator Cages | Handicap Ramps | Trash Depositor | Gutters | Light Reflectors | Rain Drainage System/ Filter |
|---|---|---|---|---|---|---|---|---|
| Energy Efficient | + | 0 | + | - | - | 0 | + | + |
| Marketable | + | + | 0 | - | - | 0 | + | + |
| Cost-Efficient | + | 0 | - | + | - | 0 | + | 0 |
| Durability | + | + | - | + | - | 0 | + | 0 |
| Safety | + | + | + | + | 0 | 0 | + | + |
| Longevity | + | + | 0 | 0 | 0 | 0 | + | + |
| Pluses | 6 | 4 | 2 | 3 | 0 | 0 | 6 | 4 |
| Sames | 0 | 2 | 2 | 1 | 2 | 6 | 0 | 2 |
| Minuses | 0 | 0 | 2 | 2 | 4 | 0 | 0 | 0 |
| Net | 6 | 4 | 0 | 1 | -2 | 0 | 6 | 4 |
| Rank | 1st | 2nd | 4th | 3rd | 5th | 4th | 1st | 2nd |
| Continue | Yes | Yes | No | No | No | No | Yes | Yes |

Idea Index

1. Side Paneling
2. Aluminum Roofing
3. Elevator Cages
4. Handicap Ramps
5. Trash Depositor
6. Gutters
7. Light Reflectors
8. Rain Drainage System/Filter

***Concept Scoring***

**Table C: Concept Scoring Matrix**

| | | **Side Paneling** | | **Aluminum Roofing** | | **Light Reflectors** | | **Rain Drainage System/FIlter** | |
|---|---|---|---|---|---|---|---|---|---|
| **Selection Criteria** | Weight | Rating | Weighted Score | Rating | Weighted Score | Rating | Weighted Score | Rating | Weighted Score |
| **Energy Efficient** | 14% | 4 | .56 | 4 | .56 | 4 | .56 | 2 | .28 |
| **Marketable** | 15% | 4 | .6 | 4 | .6 | 4 | .6 | 3 | .45 |
| **Cost-Efficient** | 19% | 3 | .57 | 2 | .38 | 4 | .76 | 3 | .57 |
| **Physical Durability** | 23% | 3 | .69 | 4 | .92 | 4 | .92 | 3 | .69 |
| **Safety** | 22% | 4 | .88 | 4 | .88 | 5 | 1.1 | 4 | .88 |
| **Longevity** | 7% | 4 | .28 | 3 | .21 | 4 | .28 | 3 | .21 |
| Total Score | | 3.58 | | 3.55 | | 4.22 | | 3.08 | |
| Rank | | 2 | | 3 | | 1 | | 4 | |
| Continue? | | no | | no | | develop | | no | |

## Analysis

### *Summary*

With all of these ideas in mind, the team needed a method by which they could systemically narrow them down. This was accomplished by conducting a concept screening; wherein each idea was weighed against each concept developed from the customer needs assessment. The quality of the relationship between each idea and concept was indicated by a plus, minus, or zero respectively. Adding up the pluses, minuses, and zeros, a net sum was calculated and a rank generated. From there, the top four ideas (side paneling, aluminum roofing, light reflectors, and rain drainage system/filter) were considered for a more in-depth evaluation.

After the screening process was complete, each concept was further evaluated by running a concept scoring, wherein each idea was again weighed against each concept and rated accordingly, but this time with the weights taken from the pairwise comparison. As done in the last evaluative method, the scores for each idea were totaled, and each idea was given an overall rank. Based off of the overall ranking, the idea which yielded the highest rank and thus highest score (light reflectors) was selected to develop for the project.

### *Cost Analysis*

The key to any project is knowing exactly how much time and money will be needed in order to implement a design solution. This can be achieved mainly through analyzing previously collected data and extrapolating to predict future outcomes. In many cases, many assumptions will need to be made in order to simplify the estimations.

East Hall's electricity consumption data in 2012 showed that all fifteen buildings used a total of 5.1 million kWh of electricity, with an average building using 339, 836 kWh. At $0.09/kWh, this equates to $458,779 in electricity costs for all fifteen buildings per year, and

$30,585 in electricity costs for an average building per year. In making assumptions for an entire complex of fifteen buildings, it is useful to choose an "average" building to conceptualize how a typical building will behave over a period of time. In this case, Hastings Hall will be the building of concern because its electricity usage of 337,525 kWh came closest in number to the average electricity usage. All assumptions will be derived from this "average" building.

Between $1-$10 is saved per foot of light shelf per year. At $0.09, this equates to 111.11 kWh per foot of light shelf. According to the Penn State Housing website, Hastings Hall has 140 rooms and each window of each room is 6.1ft wide. This totals to 854 ft. for the entire building, 94,888 kWh per year, and $8540 per year. For all fifteen buildings, this means $128,099 will be saved per year, and over 50 years, which is the life expectancy of the renovation, a total of $6,404,936 will be saved in electricity costs alone. At $100 per shelf, and assuming each building has 140 windows, it will cost $210,000 to purchase the entire 2100 light shelves. The cost of installation of each shelf is roughly $50, costing $105,000 for the entire installation. Therefore, total savings over 50 years (assuming maintenance costs of no more than 1,000 per year) is $6,039,936.[6]

**Prototype Construction**

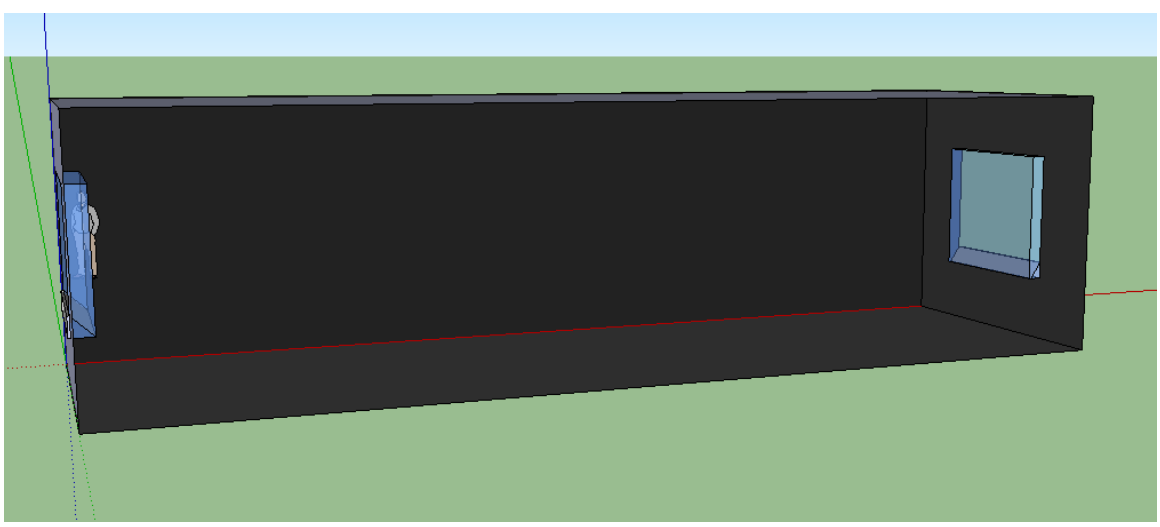

**Figure 2: Average East Hall (Hastings) Without Light Shelves**

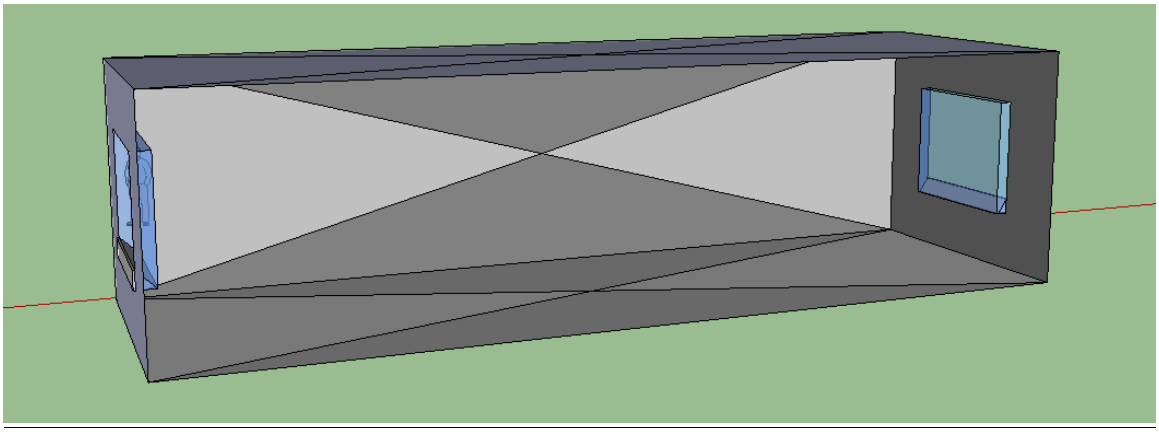

**Figure 3: Average Hall With Light Shelves (*dramatized)***

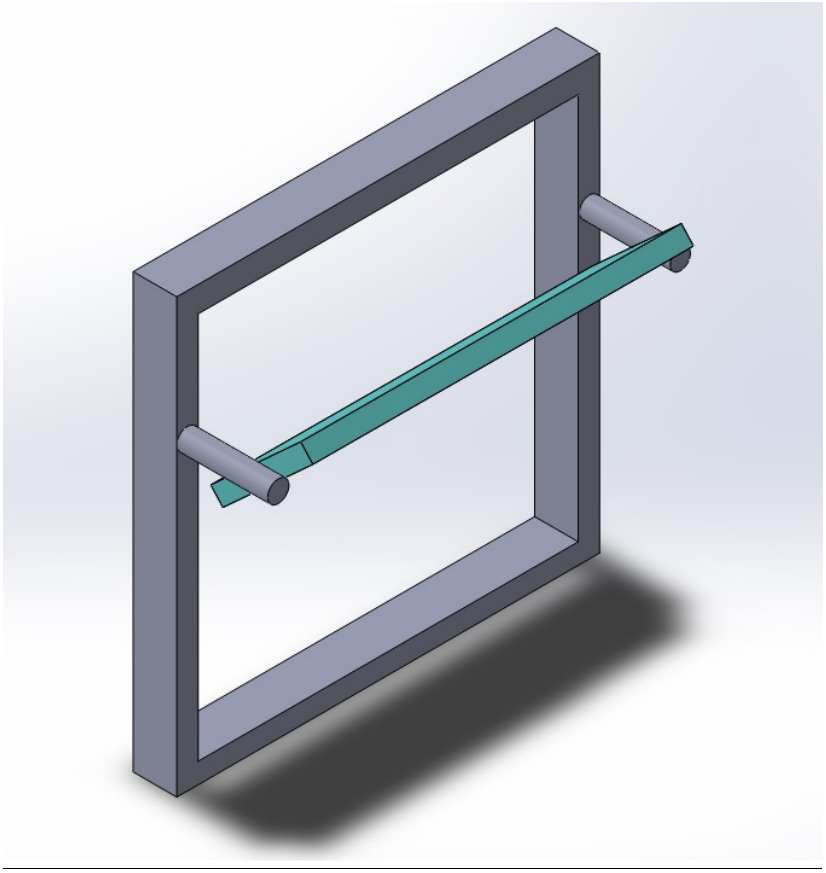

**Figure 4: Individual Light Shelf**

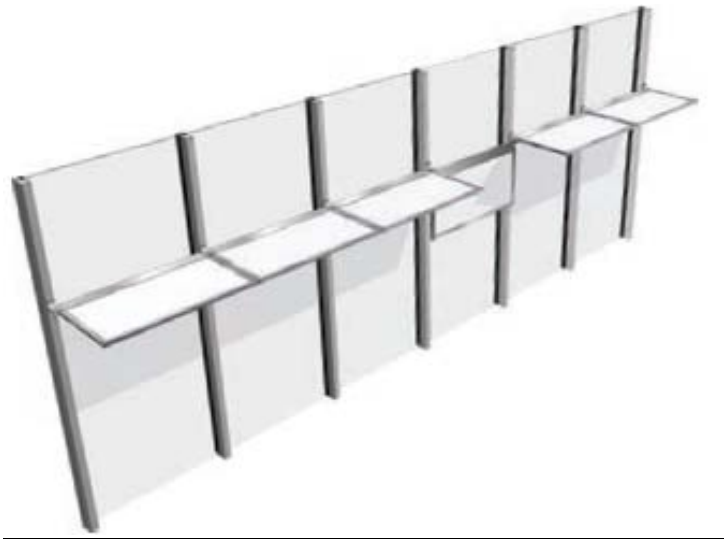

**Figure 5: InLighten Light Shelves**

**Conclusion**

Overall, the design solution meets the specifications set forth from the outset of the project. Installation of all 2100 light shelves should take less than five years, satisfying the 5-year implementation plan marketability requirement. The cost of implementation ($315,000), which is the summation of the cost of installation and cost of total units, is much lower than the cost of electricity saved from the design implementation ($6,039,936), meeting the cost efficiency requirement. The solution is energy efficient, in that the cost of energy that it takes to create all of the materials used in the solution is less than the amount of energy the solution saves over a specified period of time (50 years). And finally, the solution is expected to last close to 50 years, with maintenance each year to ensure proper functionality.

## References

[1] "Aluminum Aluminium, Alcoa Inc." *Aluminum Aluminium | Alcoa. Advancing Each Generation | Alcoa Inc.* Alcoa Inc., n.d. Web. 15 Nov. 2013

[2] "How Aluminum Is Produced." *Rocksandminerals.com*. N.p., n.d. Web. 2 Nov. 2013

[3] "How Much Energy Does It Take (on Average) to Produce 1 Kilogram of the following Materials?" *'Low-tech Magazine'* N.p., n.d. Web. 15 Nov. 2013.

[4] "Office of Physical Plant." *Penn State Office of Physical Plant*. N.p., n.d. Web. 1 Nov. 2013

[5] "Policy AD64 Energy Conservation Policy." *Guru.psu.edu*. N.p., n.d. Web. 1 Nov. 2013

[6]Wulfinghoff, Donald. Energy Efficiency Manual: For Everyone Who Uses Energy, Pays for Utilities, Controls Energy Usage, Designs and Builds, Is Interested in Energy and Environmental Preservation. Wheaton, MD: Energy Institute, 1999. Print.

## Appendix A

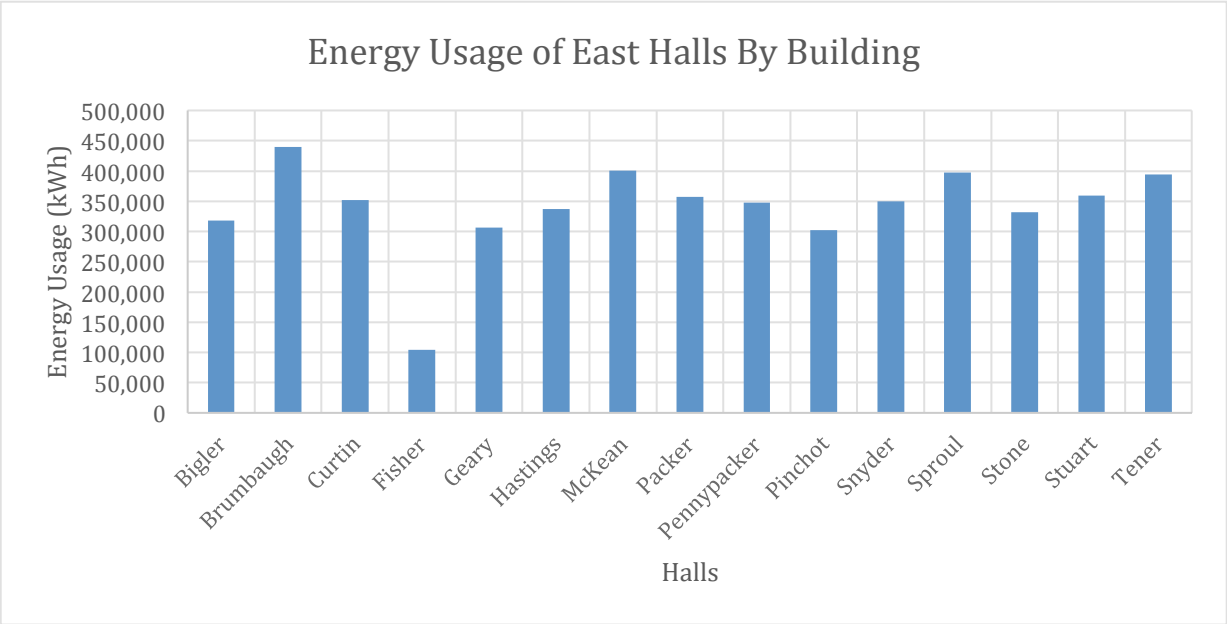


**Figure 6: Energy Usage of East Halls By Building**

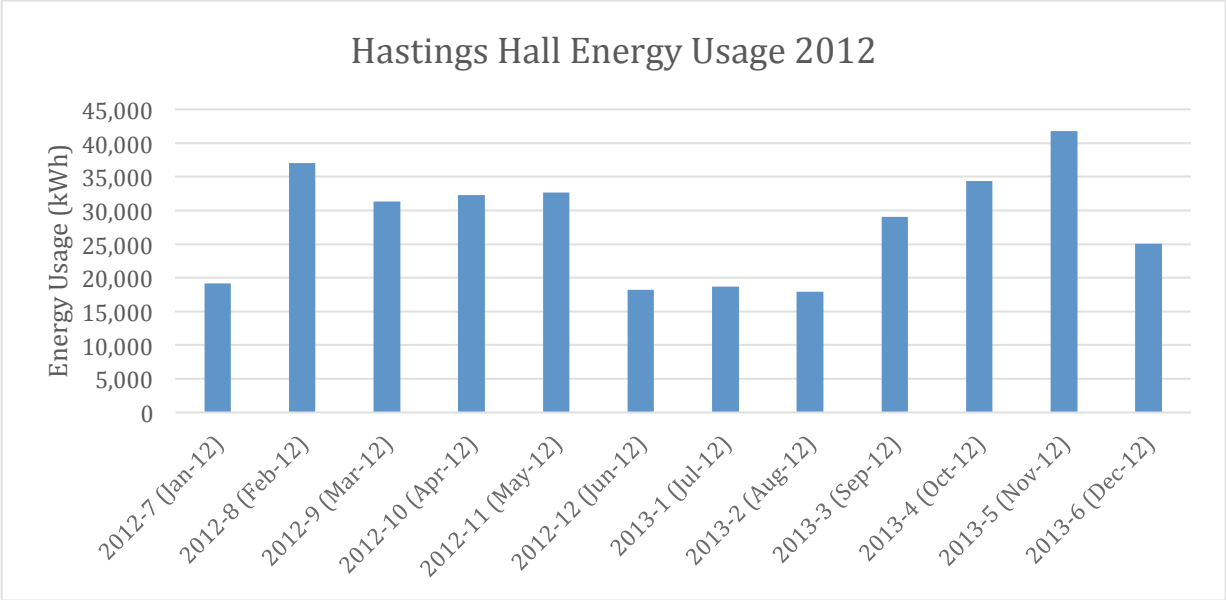


**Figure 7: Energy Usage Hastings Hall**
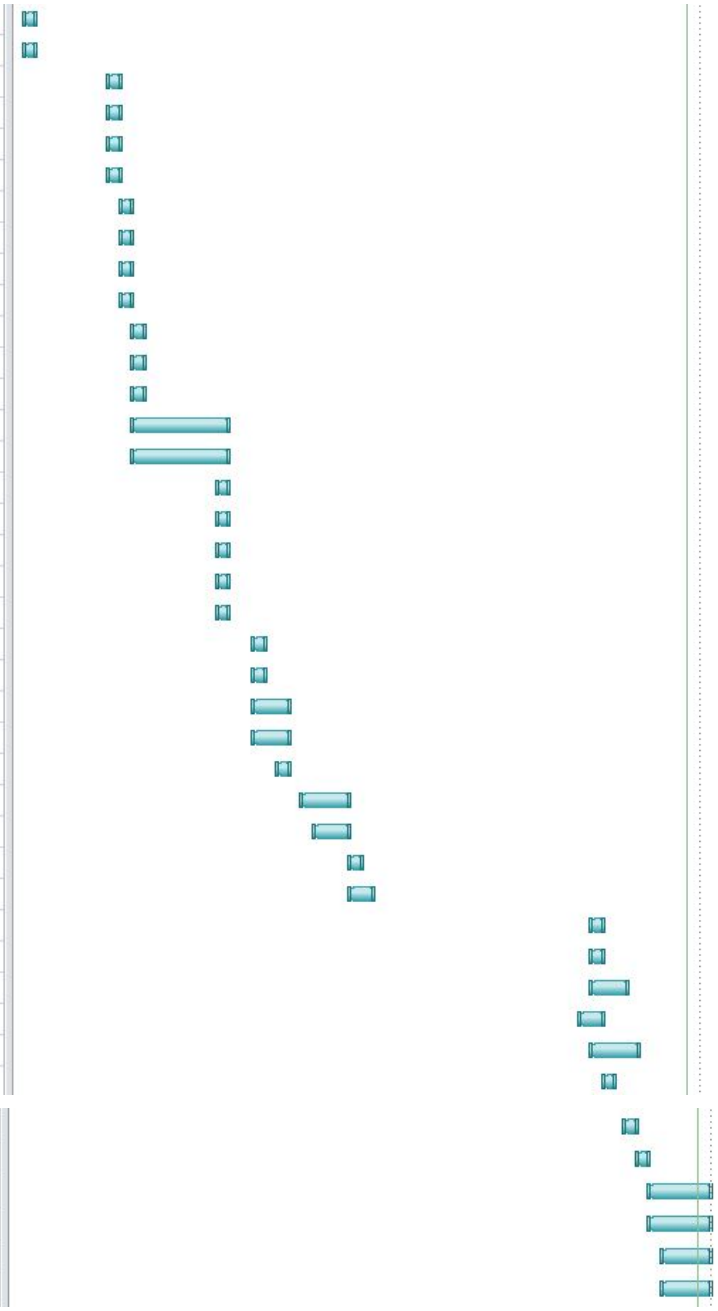
| | |
|---|---|
| 1.1 Attend Alcoa Kick-Off Meeting | 1 day |
| 1.2 Read handout (online) | 1 day |
| 1.3 Establish team leader | 1 day |
| 1.4 Establish Gantt Chart | 1 day |
| 1.5 Establish mission statement | 1 day |
| 1.6 Review mission statement with Prof. Colledge | 1 day |
| 1.7 Review production process of aluminum | 1 day |
| 1.8 Research environmental impact of aluminum production processes | 1 day |
| 1.9 Identify Stakeholders | 1 day |
| 1.10 Review Penn State regulatory code and safety specs | 1 day |
| 2.1 Review FAQ Alcoa Page | 1 day |
| 2.2 Identify contacts | 1 day |
| 2.3 Develop questions | 1 day |
| 2.4 Contact informants | 6 days |
| 2.5 Conduct interviews | 6 days |
| 2.6 Organize information gathered | 1 day |
| 3.1 Discuss sustainability | 1 day |
| 3.3 Define sustainability | 1 day |
| 3.4 Define Specifications | 1 day |
| 3.5 Quantify specifications | 1 day |
| 4.1 Formulate consensus with previously gathered data | 1 day |
| 4.2 Review mission statement (familiarirty) | 1 day |
| 4.3 Brainstorm | 3 days |
| 4.4 Write down every idea & specifications | 3 days |
| 4.5 Organize ideas | 1 day |
| 5.1 Review ideas | 2 days |
| 5.2 Critique feasibility of each idea based on restrictions | 2 days |
| 5.3 Narrow ideas using Concept Scoring Matrix | 1 day |
| 5.4 Determine project via Concept Screening Matrix | 2 days |
| 6.1 Review PDR | 1 day |
| 6.2 Select design path | 1 day |
| 6.3 Discuss build of product | 3 days |
| 7.1 Purchase materials | 2 days |
| 7.2 Construct | 4 days |
| 7.3 Evaluate error | 1 day |
| 7.4 Redesign layout | 1 day |
| 7.5 Reconstruct | 1 day |
| 8.1 Write analysis of project | 3 days |
| 8.2 Construct PowerPoint | 3 days |
| 8.3 Formulate graphs & charts to supplement literature | 3 days |
| 8.4 Ready oral presentation | 3 days |