EDSGN 100: Introduction to Engineering Design

Section 009
Team 6

Design Project 1: Dumpling Maker

Submitted by: Kristof Marrecau, Nick Pytel, Meghan Morris, Elisvellie Turbi
Submitted to: Xinli Wu on 20-March-2016

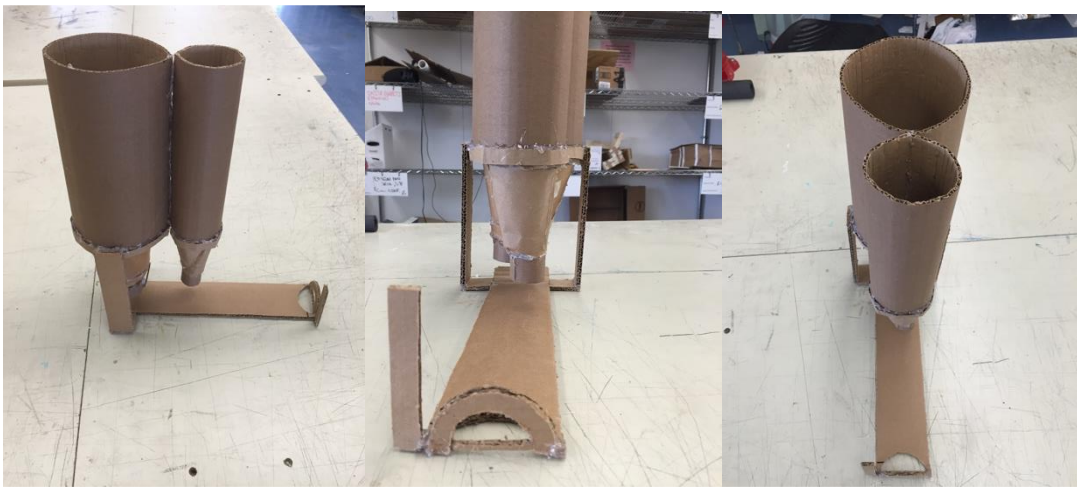

Spring 2016

Abstract (Elisvellie Turbi)

This report contains details of our design approach as well as a complete engineering analysis of our product. The report displays the different means of research and development required to reach our desired outcome while giving insight on how we planned to fulfill the demand of a machine to ease the process of making dumplings.

Table of Contents (Kristof Marrecau)

Abstract.....2 (Elisvellie Turbi)
Introduction.....4 (Elisvellie Turbi)
Problem Statement.....4 (Kristof Marrecau)
Mission Statement.....4 (Kristof Marrecau)
Design Specifications.....5 (Kristof Marrecau)
Gantt Chart.....5 (Meghan Morris & Elisvellie Turbi)
Customer Needs Assessment.....5-6 (Meghan Morris)
Concept Generation.....6-7 (Kristof Marrecau, Nick Pytel, Meghan Morris & Elisvellie Turbi)
Design Selection Matrices.....8 (Kristof Marrecau)
Working Drawings.....9-11 (Nick Pytel)
Scale.....12 (Meghan Morris)
Design Features.....12 (Nick Pytel)
Operation Instructions.....13 (Meghan Morris)
Working Mechanism.....13-14 (Nick Pytel)
Cost Analysis.....14 (Meghan Morris & Elisvellie Turbi)
Conclusion.....15 (Kristof Marrecau)
References.....15-16 (Elisvellie Turbi)

Contact Information:

Kristof Marrecau

Nick Pytel

Meghan Morris

Elisvellie Turbi

Introduction (Elisvellie Turbi)

At the beginning of this semester, Xinli Wu presented his EDSGN100 course with a problem; the non-existence of a portable semi-automatic dumpling-making machine. Making dumplings by hand is a very tedious task, the art has been around for several decades but nobody has come up with a way to ease the process. Of course there are industrial sized machines that could partially fill the void presented, however those machines are very bulky and not suitable for home use or small restaurants. Xinli presented us with the mission of designing a machine that would fulfill the demand. The product must be safe to use, must produce a minimum of 10 dumplings per minute and must be cost efficient, meaning the cost of the materials to produce a single machine must not exceed two-hundred dollars. Our machine will satisfy all of the criteria as well as be dishwasher safe, it will however require pre-made dough and pre-made filling at the cost of having a compact model that is virtually mess-free.

Problem Statement (Kristof Marrecau)

Dumplings are enjoyed across the world by a variety of cultures. While making dumplings, a common problem that may arise is how to make them efficiently. It can be a toil to make each dumpling by hand, scoop the filling in, fold, and crimp it. A machine that combines these processes into a mechanical operation can cut down on time, enabling a consumer to make more dumplings efficiently.

Mission Statement (Kristof Marrecau)

To make an affordable machine that can maximize dumpling output with minimal effort and time. Our dumpling maker can be used both commercially and in the home.

Design Specifications (Kristof Marrecau)

Our dumpling maker was to be made with the following specifications:

- The dumpling maker should be automatic or semi-automatic.
- The dumpling maker should produce no less than 10 dumplings per minute on average.
- The material cost for the dumpling maker should not exceed $200 unless it can be justified.
- The dumpling maker should be safe as a food processor, easy to maintain, safe to use, and dishwasher safe.

Gantt Chart (Meghan Morris & Elisvellie Turbi)

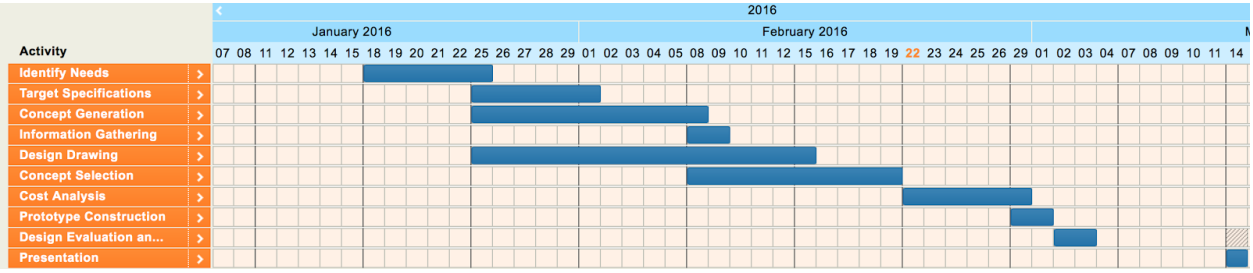

Table 1. Gantt Chart

Customer Needs Assessment (Meghan Morris)

How do you currently make your dumplings?

I make my dumplings by hand.

Would you be interested in using a machine to make the dumplings?

No because it isn't as authentic as if the dumplings were made by hand.

If there was a dumpling maker that made the dumplings look more authentic would you be interested in using it?

Yes.

What would you look for in that dumpling maker?

I would want it to be efficient and easy to clean.

How much would you be willing to spend on a dumpling maker?

$200.

Concept Generation (Team)

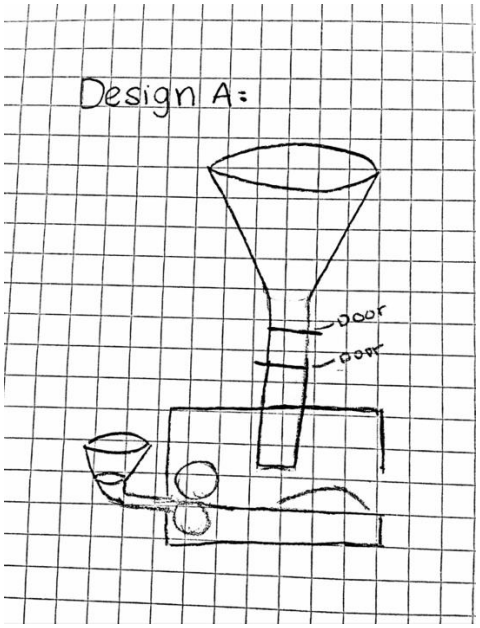

FIG. 1. Design A

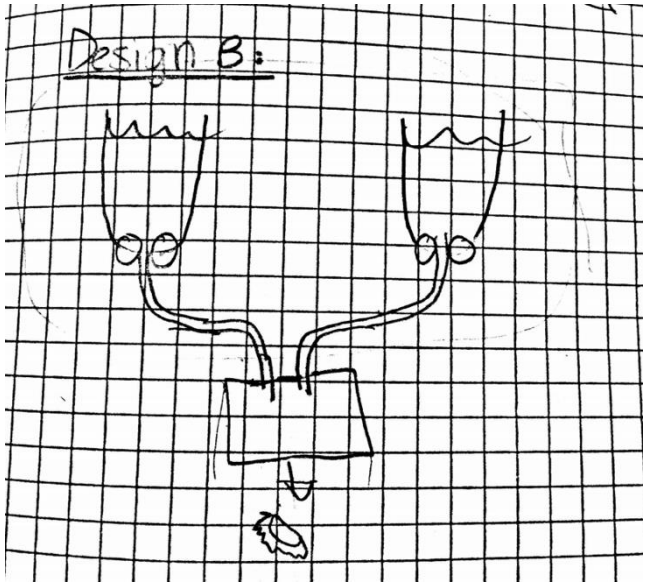

FIG. 2. Design B

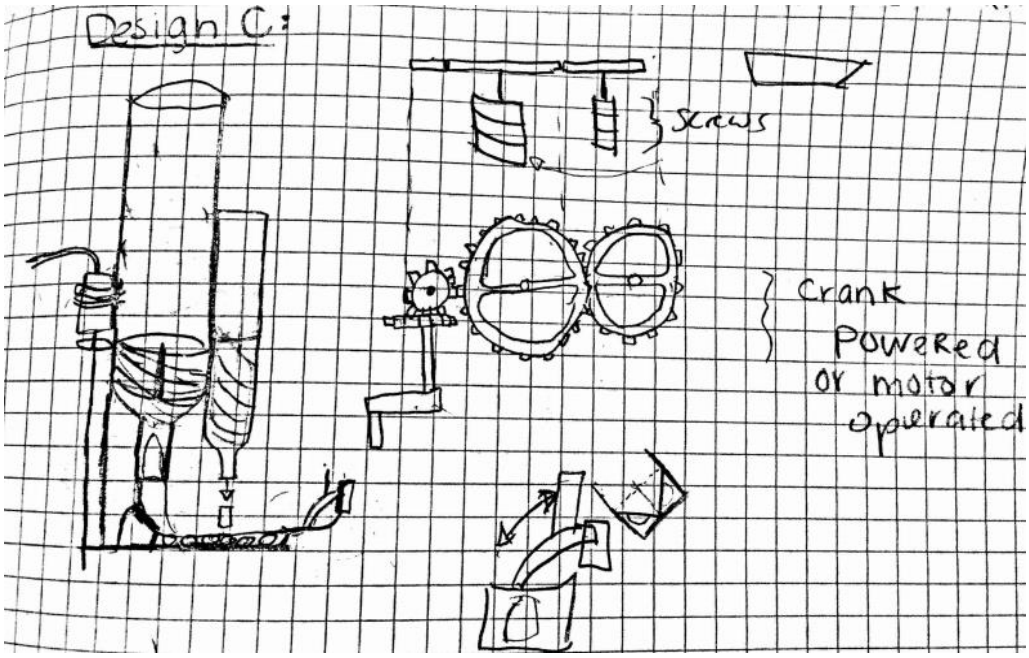

FIG. 3. Design C

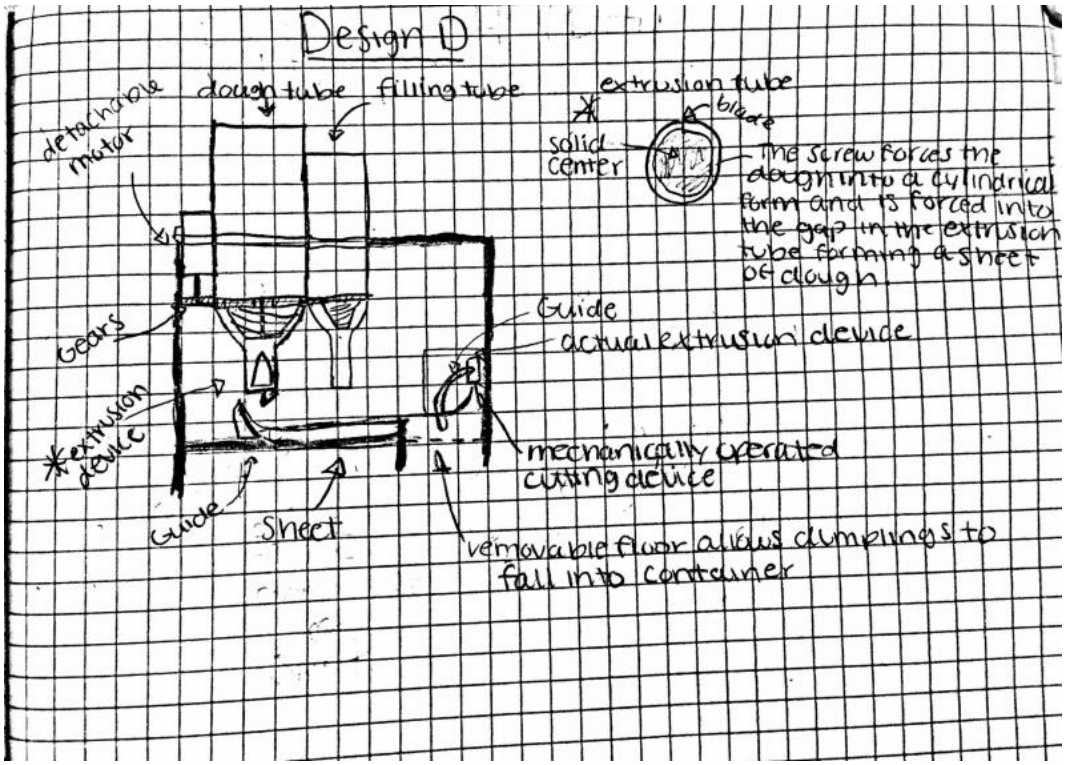

FIG. 4. Design D

Design Selection Matrices (Kristof Marrecau)

Selection Criteria	Concepts				
	A	B	C	D	Reference
Ease of Handling	0	-	0	+	0
Ease of Use	+	-	+	+	0
Portability	+	-	-	-	0
Durability	-	-	+	+	0
Efficiency	-	+	+	+	0
Precision	+	0	+	+	0
Cost	0	0	-	-	0
Sum +'s	3	1	4	5	0
Sum 0's	3	2	1	0	7
Sum -'s	2	4	2	2	0
Net Score	1	-3	2	3	-
Rank	3	4	2	1	-
Continue?	No	No	Yes	Yes	-

Table 2. Concept Screening Matrix

Selection Criteria	Weight	Concepts					
		C		D		Reference	
		Rating	Weighted Score	Rating	Weigted Score	Rating	Weighted Score
Ease of Handling/Safety	25%	2	0.50	4	1.00	3	0.75
Ease of Use	15%	3	0.45	4	0.60	3	0.45
Portability	5%	4	0.20	3	0.15	3	0.15
Durability	10%	3	0.30	5	0.50	3	0.30
Efficiency	25%	3	0.75	4	1.00	3	0.75
Precision	10%	5	0.50	5	0.50	3	0.30
Cost	10%	4	0.40	3	0.30	3	0.30
Total Score		3.10		4.05		3.00	
Rank		2		1		-	
Continue?		No		Yes		-	

Table 3. Concept Selection

Working Drawings (Nick Pytel)

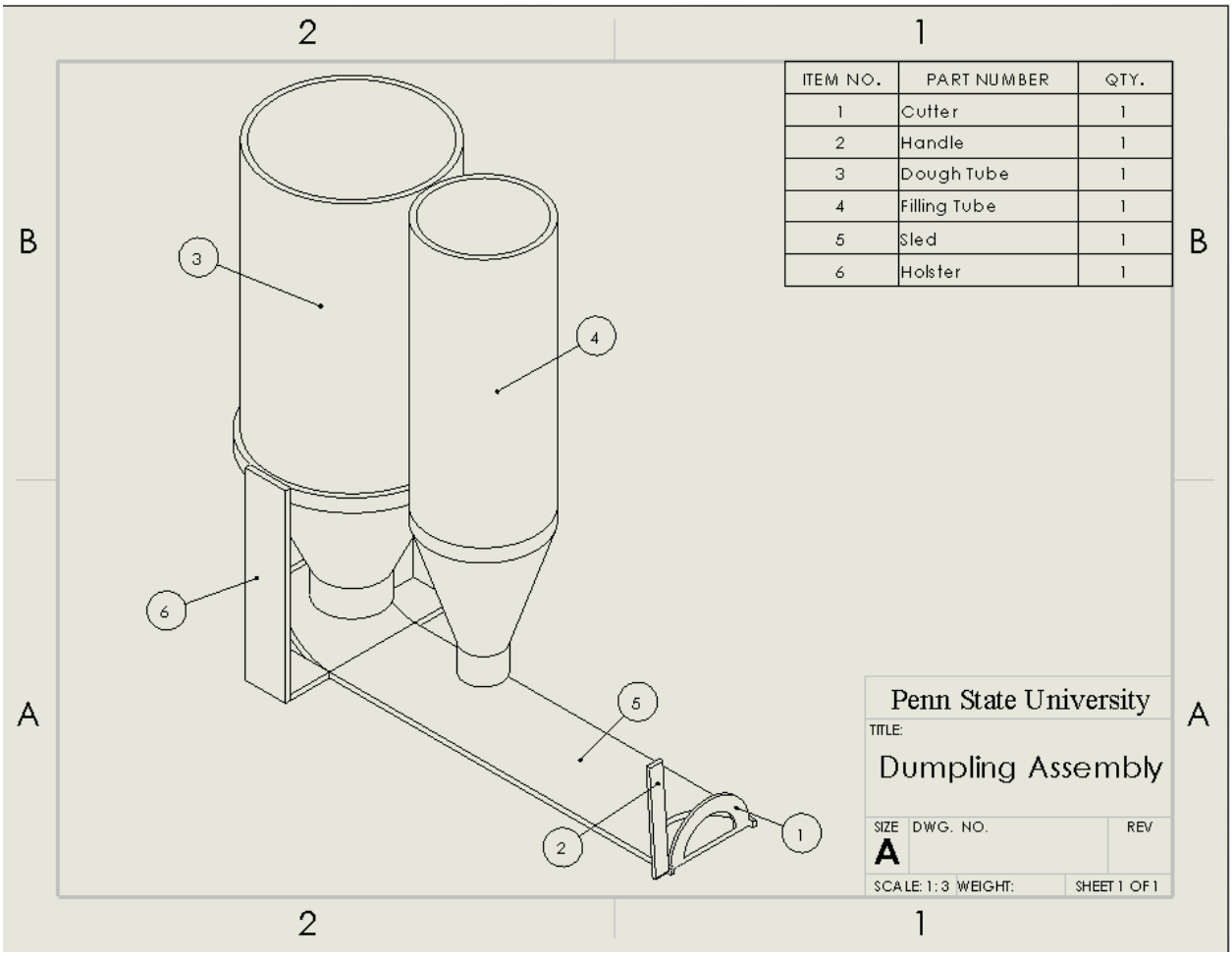

FIG. 5. Dumpling Assembly

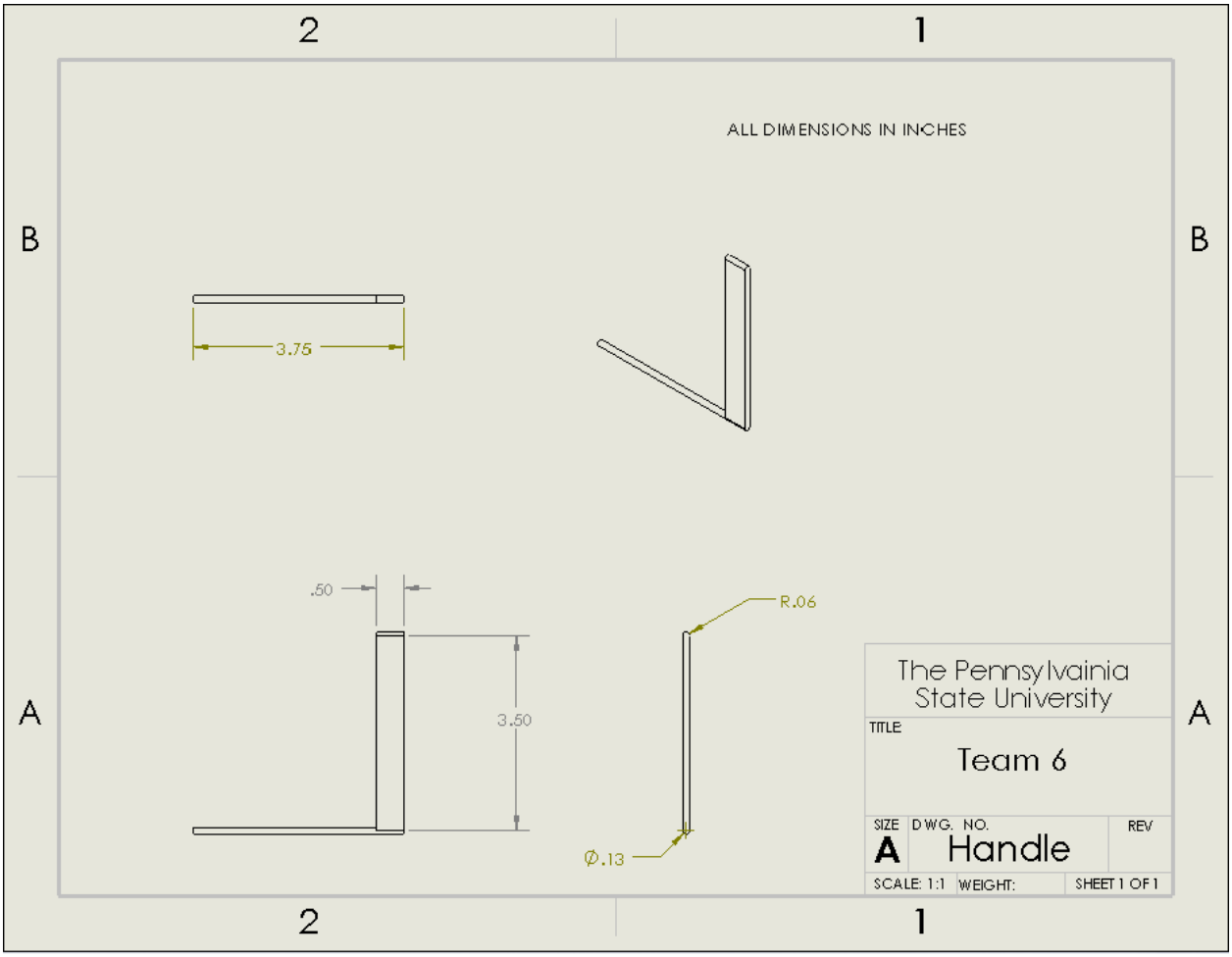
ALL DIMENSIONS IN INCHES
3.75
.50
3.50
R.06
Ø.13
The Pennsylvainia State University
TITLE
Team 6
SIZE
A
DWG. NO.
Handle
REV
SCALE: 1:1
WEIGHT:
SHEET 1 OF 1

FIG. 6. Handle

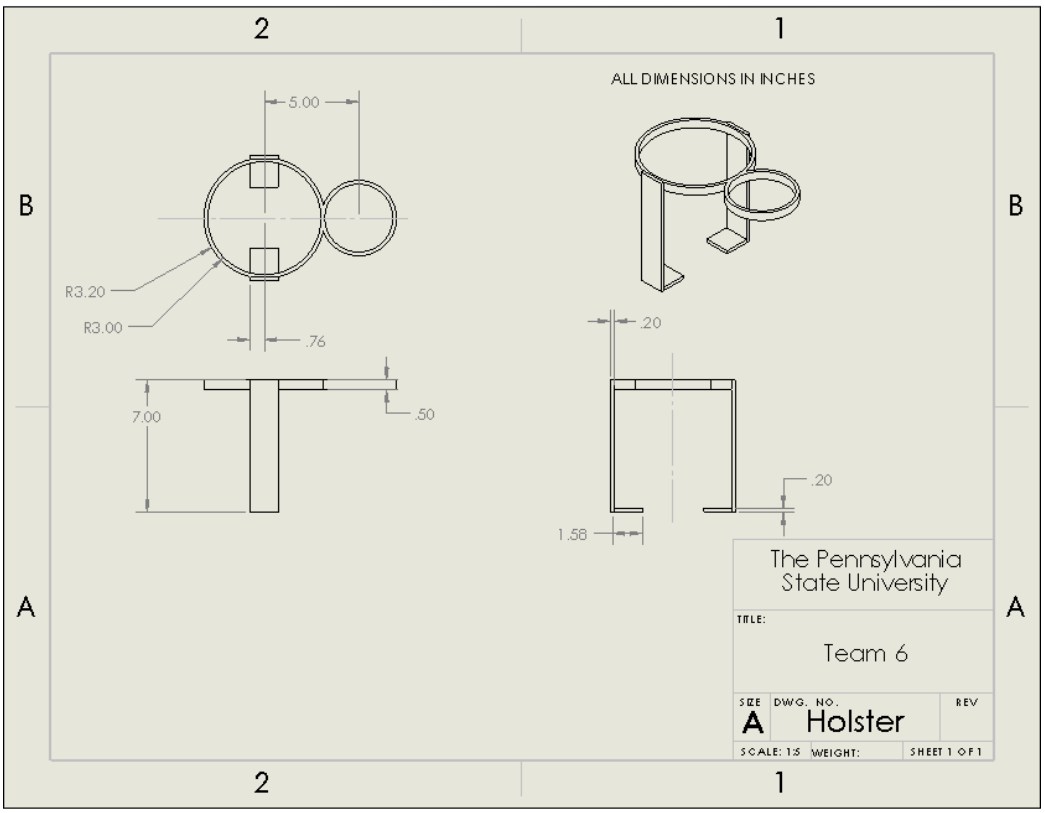

FIG. 7. Holster

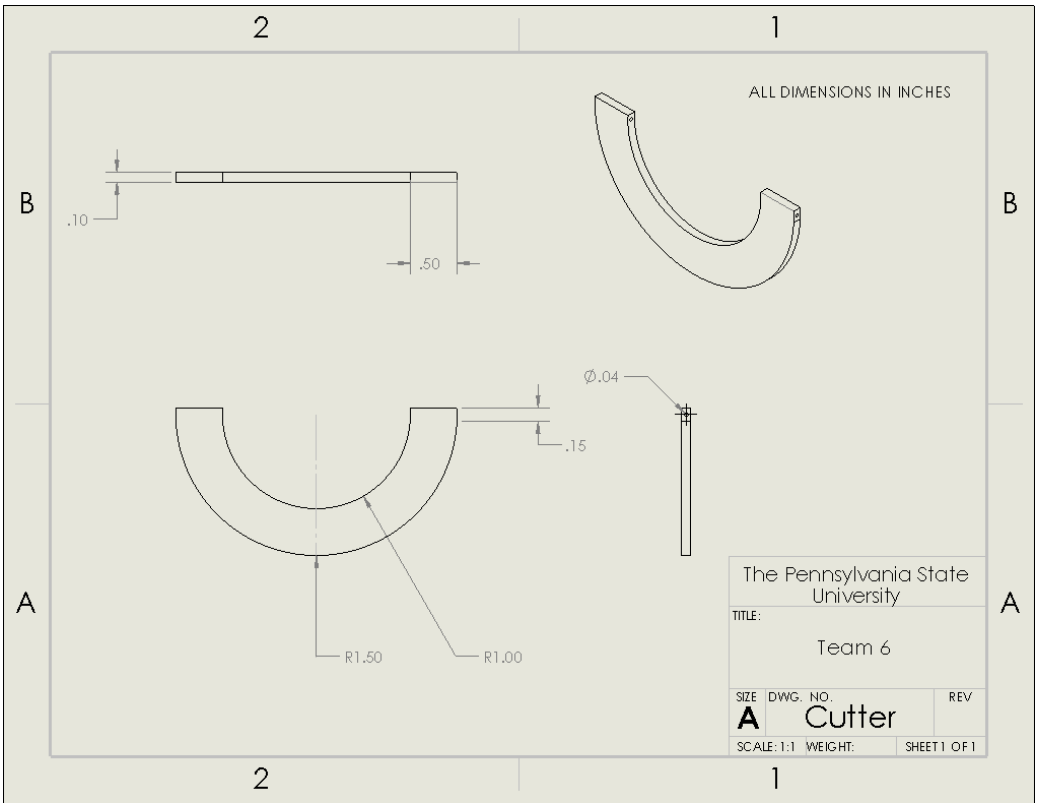

FIG. 8. Cutter

Scale (Meghan Morris)

The scale, based on the measurements from the design in SolidWorks, is 1:1.

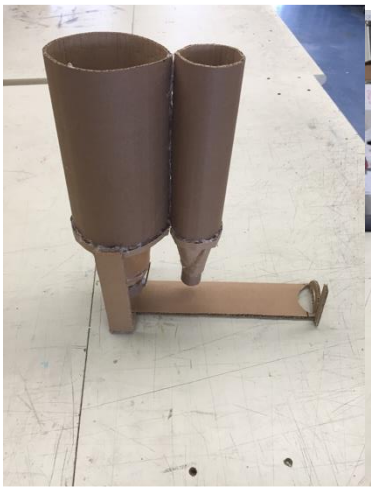

FIG. 9

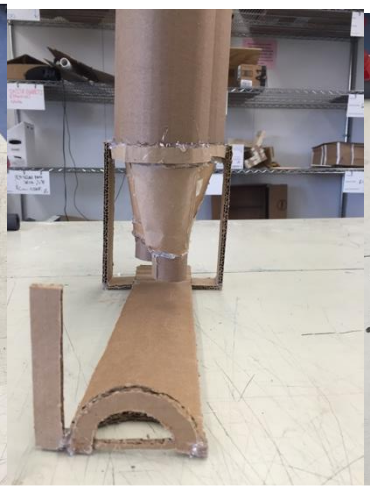

FIG. 10

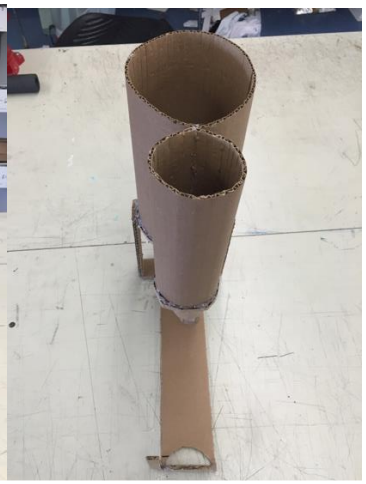

FIG. 11

Design Features (Nick Pytel)

The dumpling maker was designed with a multitude of unique features that gives it an edge over any other of equal size on the market. The first benefit is that the main body of the device is made entirely from food safe plastic. This allows for easy cleaning by the operator and allows it to fit in some larger industrial dishwashers (for small restaurants). The design also features a readily detachable electric motor to facilitate the cleaning process. The auger heads and associated gears are also made from the same food safe plastic. Since the auger heads are located within the extrusion tubes, it is very difficult for an individual to accidentally hurt themselves with the automated parts. The design also features a hand operated half-moon cutting device which allows for quick and efficient operation with the most inexperienced of users. The snap-together sled can be quickly detached from the extrusion tube stands for more compact storage.

Operation Instructions (Meghan Morris)

First, the user needs to fill the larger cylinder with pre-made dough and the smaller cylinder with the dumpling filling. The dumpling maker is semi-automatic, so at this point, the user would turn the machine on. The threaded auger in the dough cylinder begins to turn and pushes the dough out of the bottom of the cylinder. The dough slides along the bottom of the machine and the filling falls on top of the dough. When the dough and filling gets to the end of the slide, the user will flip over the handle, and a dumpling is cut and crimped. The user repeats this process of cutting the dumplings until the dough and filling runs out in the cylinders.

Working Mechanism (Nick Pytel)

Dough and filling are first put into their respective tubes. Once these tubes are filled to the desired level, the user turns on an electric motor activates the extrusion device. The extrusion device in the dough tube operates by taking a large auger and forcing dough down through the tube. The tube at the bottom has an inner cylinder which is connected to the main body by a thin strip of metal. This forces the dough into a hollow cylinder of uniform thickness and width and then cuts the cylinder with the thin metal strip as it leaves the end of the tube. A perfectly uniform sheet of dough then is extruded onto the base which guides it underneath the filling extruder. The filling extruder operates similarly to the dough extruder with a few small differences. The actual tube is smaller than the dough extrusion tube and there is no cutting device or inner cylinder. As it spins, it pulls filling through the screw and forces it into the tip of the cylinder. After a certain amount fills the cavity, gravity pulls it out and drops a uniform blob of filling on the slowly moving dough sheet underneath it. The sheet then travels to the cutting device where it is allowed to pass over a semi circle shaped hole on the sled. The operator then

waits until the filling blob resting on the dough reaches the center of the semicircle (indicated for the user on the side of the track by a black line). Once it reaches this point, the user then flips up the arc shaped cutting device which both seals and cuts the dumpling. The entire device sits on the side of a table allowing for the user to collect the freshly made dumplings in a basket underneath the cutting hole. The excess dough can also be collected (if the operator so desires) and can be placed back into the dough extrusion tube.

Cost Analysis (Meghan Morris & Elisvellie Turbi)

Product	Qty	Cost (per unit)	Link
Aluminum Rod	6	$6.27	http://www.ebay.com/itm/like/271418529319?lpid=82&chn=ps&ul_noapp=true
HDPE Plastic Sheet	3	$9.73	https://www.zoro.com/value-brand-sheet-stck-12-in-w-24-in-l-0250-in-t-3hml4/i/G3039197/?gdffi=047ada998cf641fa93e55ae8579df863&gdfms=FEFDFA50BC6B4A4B9C41307BF671A7DF&gclid=CjwKEAjwq6m3BRCP7IfMq6Oo9gESJACRc0bNUN_KCd3ZrlWpMTEovjiAovHhen6_G_Zf-dSlJalpbxoCiF7w_wcB&gclsrc=aw.ds
Ajustable Unthreaded Handle	1	$6.69	http://www.mcmaster.com/#control-handles/=11kz973
3" Plastic Funnel	1	$5.99	http://www.sears.com/unique-bargains-3-1-2inch-diameter-laboratory-measurements-clear/p-SPM7925622023?hlSellerId=29267&sid=IDx20110310x00001i&kpid=SPM7925622023&kispla=SPM7925622023
6" Funnel	1	$7.88	http://www.ebay.com/itm/like/231554552533?lpid=82&chn=ps&ul_noapp=true
Semicircular Blade	1	$5.99	http://www.amazon.com/ZFE-semi-circular-oscillating-Multimaster-Multifunction/dp/B00QBW5Q78/ref=sr_1_8?s=hi&ie=UTF8&qid=1458250236&sr=1-8&keywords=semicircular+blade
Detachable Motor	1	$4.99	http://www.ebay.com/itm/NEW-MABUCHI-RS-555PH-HIGH-TORQUE-MOTOR-GENERATOR-12V-5500RPM-/230438229146
	Total Cost	$98.35	

Table 4. Bill of Materials

Our machine was made to be simple in order to reduce cost and maximize profit while still being affordable to consumers. We did this by making our machine primarily out of HDPE plastic which is durable and food grade. Our machine will cost us approximately $98.00 to produce meaning we would be able to make a reasonable profit of $102.65 if we sold the machine for $200. We decided to keep our machine very affordable due to the feedback we received from the restaurant we contacted.

Conclusion (Kristof Marrecau)

Looking back at the task and specifications put forth by our professor, we were able to successfully design a dumpling maker than can make ten or more dumplings per minute. Our dumpling maker not only meets the minimum specifications, but is also very easy to use. It is cheap to produce, yielding a high profit (of about $100). We worked well together as a team to achieve our objective and were able to complete each part of the design process in a timely manner. If we were to go back and redo anything in our project, we would make the dough and filling tubes shorter and would also make the sled where the dough moves wider, which would produce larger dumplings.

References (Elisvellie Turbi)

Aluminum Rod. (n.d.). Retrieved March 17, 2016, from http://www.newegg.com/Product/Product.aspx?Item=9SIA9YC3V73930

4" diameter 9" L aluminum rod

Adjustable Unthreaded Handle. (n.d.). Retrieved March 17, 2016, from http://www.mcmaster.com/#control-handles/=11kz973

Die Cast Zinc Adjustable Handle, Unthreaded Hole, 1/4" Hole Diameter

Motor. (n.d.). Retrieved March 17, 2016, from http://www.ebay.com/itm/NEW-MABUCHI-RS-555PH-HIGH-TORQUE-MOTOR-GENERATOR-12V-5500RPM-/230438229146

MABUCHI RS 555PH HIGH TORQUE MOTOR GENERATOR 12V 5500RPM

Plastic Sheets. (n.d.). Retrieved March 16, 2016, from https://www.zoro.com/value-brand-sheet-stck-12-in-w-24-in-l-0250-in-t-3hml4/i/G3039197/?gdffi=047ada998cf641fa93e55ae8579df863

Sheet Stck, 12 In. W, 24 In. L, 0.250 In. T

Plastic Funnel. (n.d.). Retrieved March 18, 2016, from http://www.sears.com/unique-bargains-3-1-2inch-diameter-laboratory-measurements-clear/p-SPM7925622023?hlSellerId=29267

3 1/2 " diameter food safe plastic funnel

Plastic Funnel. (n.d.). Retrieved March 18, 2016, from http://www.ebay.com/itm/like/231554552533?lpid=82

6" diameter food safe plastic funnel

Semi Circular Blade. (n.d.). Retrieved March 18, 2016, from http://www.amazon.com/ZFE-semi-circular-oscillating-Multimaster-Multifunction/dp/B00QBW5Q78/ref=sr_1_8?s=hi

3 1/4” diameter semicircle blade