Design Portfolio

Nicholas Pytel

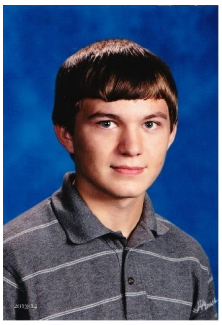

Introduction to Engineering and Design
Sponsored by Lockheed-Martin
Section 06
Team 06

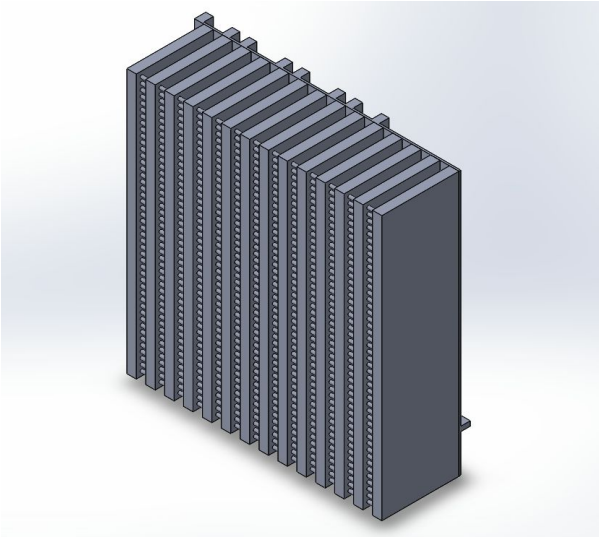

Submitted by: Nicholas Pytel
Submitted to: Xinli Wu
4/30/2016

Abstract

Introduction to Engineering and Design culminated into two design projects and various smaller projects. The first design project was to design an effective dumpling maker and the second was to design a thermal exchanger. Additionally, an entertainment center was designed using Solidworks.

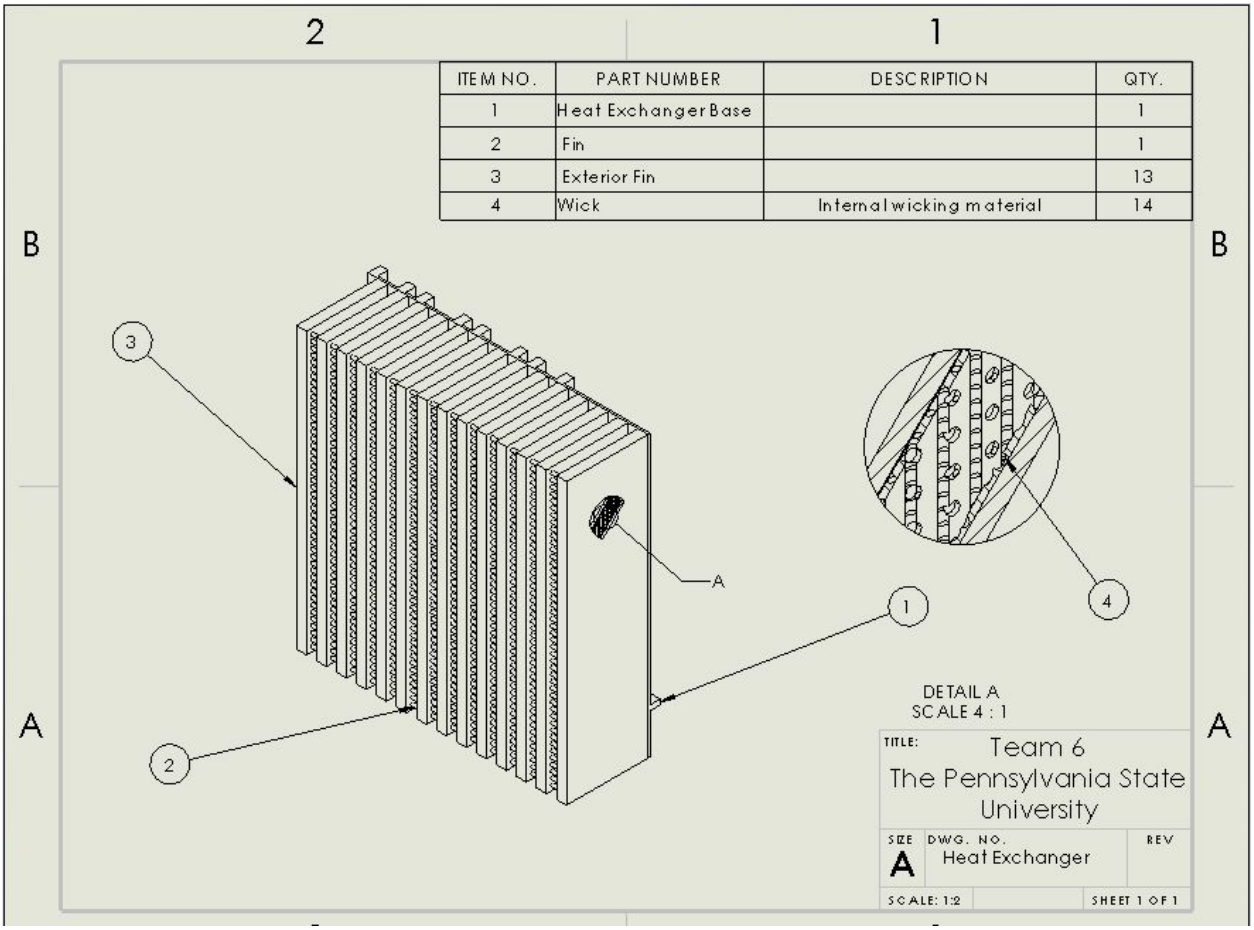

ITEM NO.	PART NUMBER	DESCRIPTION	QTY.
1	Heat Exchanger Base		1
2	Fin		1
3	Exterior Fin		13
4	Wick	Internal wicking material	14

Table of Contents

- Resume…….pg 3
- Course Syllabus…….....pg 4
- Assignment Examples....pg 4-6
- Design Project 1……..pg 7
- Design Project 2……..pg 8
- Summary……..pg 9

Resume

Nicholas Pytel
nkp5097@psu.edu
Undergraduate
College of Engineering
Penn State Class of 2019

Objective:

I am interested in majoring in Aerospace Engineering and working with more space oriented systems. I would like to be involved with challenging activities and lead the way with space innovations and research. Skills such as problem solving and group communication are necessary in this field and I plan on further refining these.

Education & Academic Awards

Graduated Bald Eagle Area High School in the top 5 percent of class
Undergraduate at Penn State Main Campus
Current GPA of 3.52
Presented with Navy Award for academic excellence
Presented with Engineering award for academic achievement
Member of National Honors Society
President of Technology Team in High School

Skills

Public speaking and effective group work learned from speech class
Self-taught electrical engineering experience
Leadership skills from teaching martial arts
Programming experience from High School robotics
Mechanical design and integration experience from FIRST Robotics
Self defense and martial arts training
Easily capable of working under stress
Problem solving skills developed from various challenges and clubs

Employment & Volunteer work

Currently employed at Wegman's in the Dairy department. I work between 20 - 25 hours each week while taking classes part time.
Volunteered with the Knights of Columbus cooking meals and helping clean.
Volunteer to teach and assist with training of new students and black belt preparation training in my martial arts studio.
Currently a member of the Lunar Lion student organization where I work with other students to design and integrate a solar power management system into a lunar lander.

Course Syllabus

Brief Overview

The Introduction to Engineering design course features two design projects, a personal CAD project, two exams, drawing homework assignments, and CAD assignments. These tasks were completed along with various lessons over a 15 week period. In addition to the above stated, the course material also involved creating a personal website.

The full course syllabus and website can be found at the instructor's website: Xinli Wu EDSGN100

Assignment Examples

Located here are various images from the CAD design project. The CAD project's objective was to create an Entertainment center on Solidworks along with assembly and working drawings. These drawings give a decent overview of the example assignments that were present in the course. Below are multiple examples from the project along with various other assignments. The first image is of a candlestick created using Solidworks. This was part of an in-class lesson on solidworks. The next image is an assembly drawing from the personal CAD project. The assembly is an entertainment center that was also created using Solidworks. The third image is another from the in-class CAD lessons where advanced techniques utilizing planes and lofts were used to create a bottle.

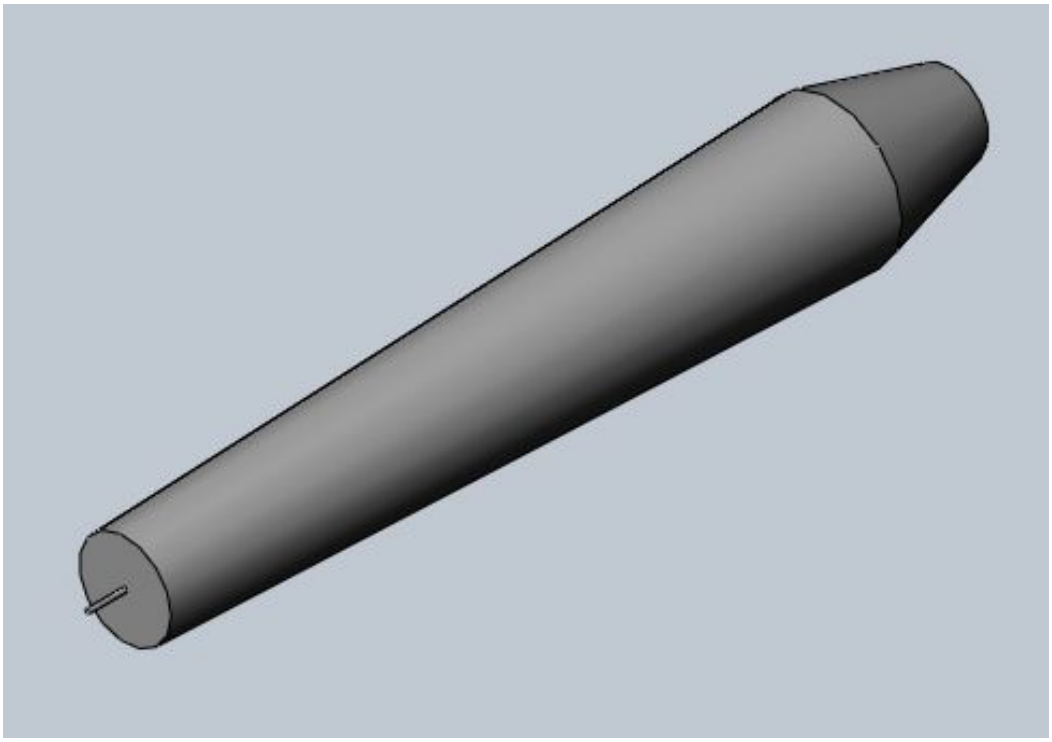

ITEM NO.	PART NUMBER	manual explode/QTY.
1	Side_Base	2
2	TOP	1
3	Front	1
4	Shelf_Right	4
5	Back	1
6	Shelf2	1

Dimensions of shipping container: 56 X 36 X 3.5 IN

Nails for assembly not inlcuded in pictorial

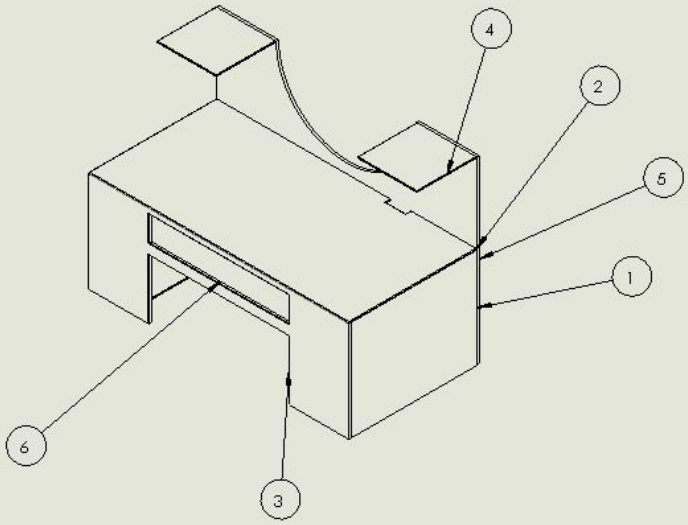

Nicholas Pytel

THE PENNSYLVANIA STATE UNIVERSITY

SIZE A | ENTERTAINMENT CENTER | REV

SCALE: 1:24 | SHEET 1 OF 1

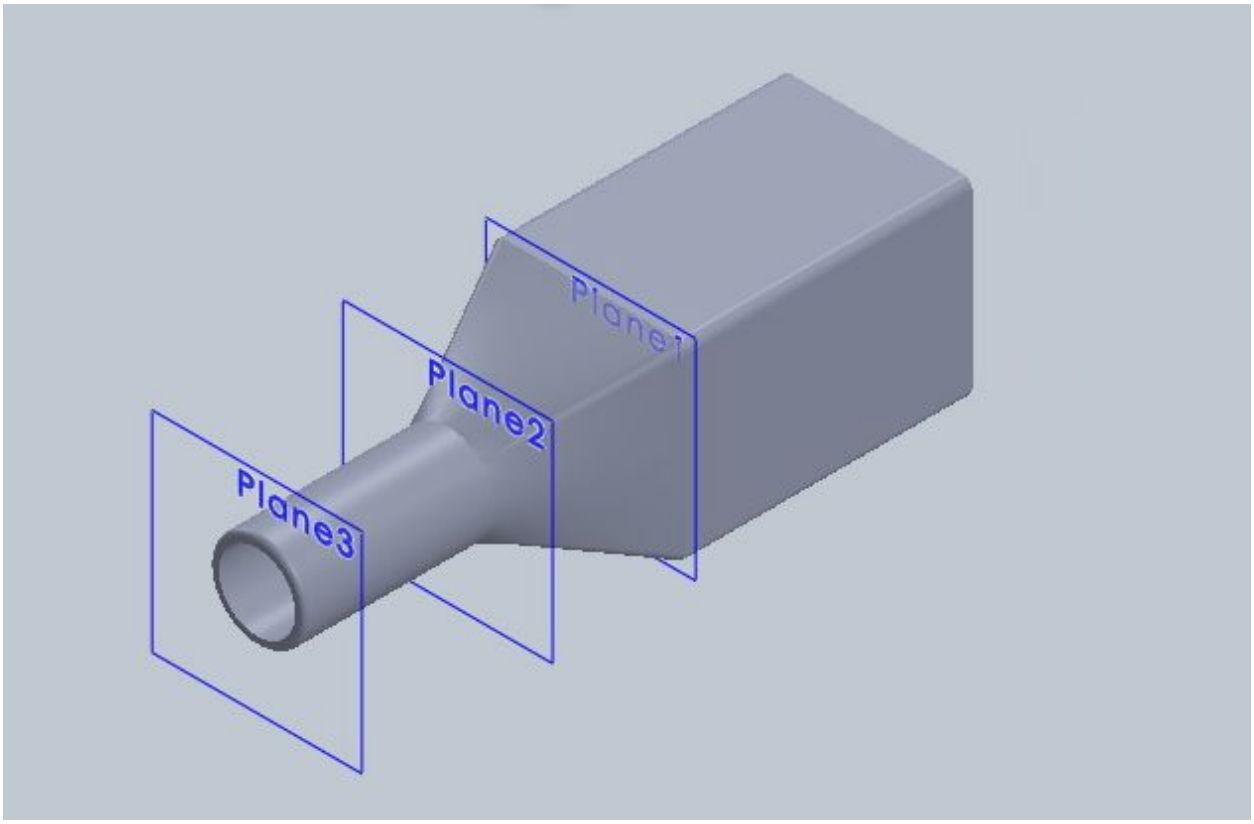
Plane1
Plane2
Plane3

Design Project 1:
The Dumpling Maker

The first design project that students encountered was to fully design an automated dumpling maker to facilitate the production of dumplings. Some of the basic criteria set out for the problem was that the final design had to be affordable (less than $250), compact, and capable of producing at least 10 dumplings per minute. In addition to three working drawings and an assembly drawing, it was also required that structural prototype be created to illustrate the working mechanisms. The final thing required for the first design project was a completed project report which contains all the necessary information for the project.

The full design project report can be found here: Design Project 1

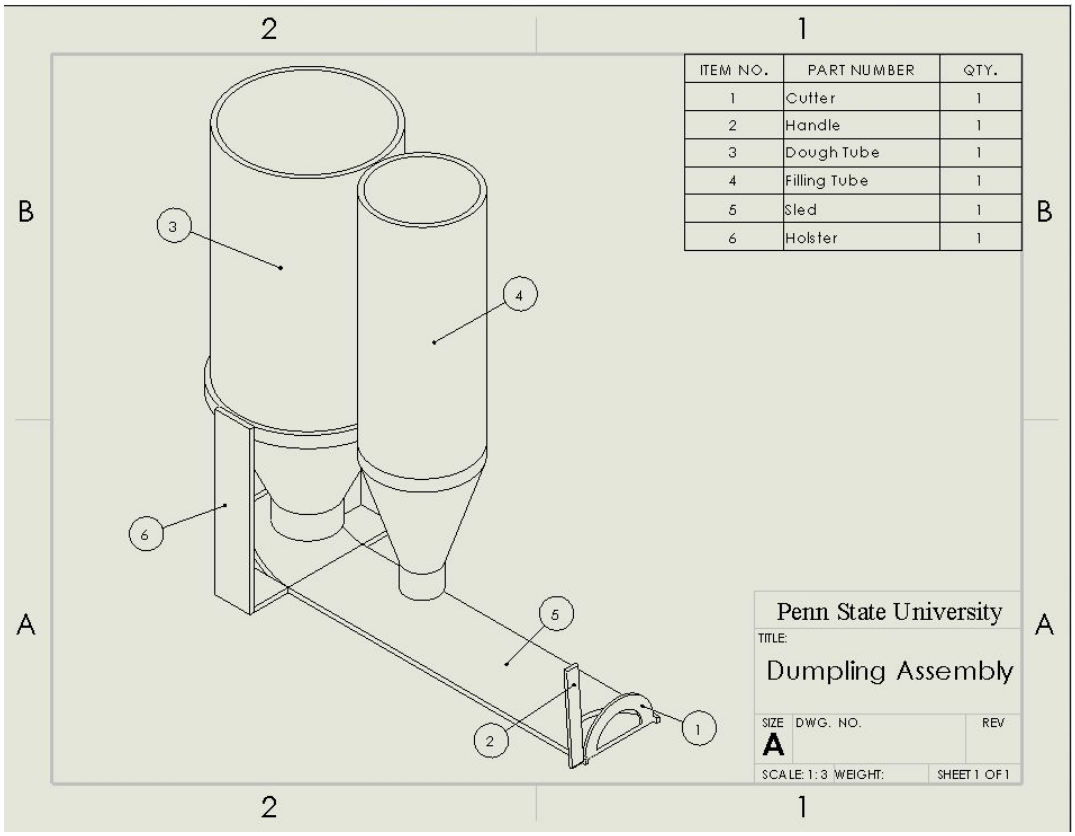

Design Project 2:
Additively Manufactured Heat Exchanger

The second design project was specifically from Lockheed-Martin and provided students with multiple options for design projects. The additively manufactured heat exchanger was one option out of multiple. For the heat exchanger, Lockheed provided very basic information (since most of their work is classified) from which a heat exchanger had to be redesigned. Some of the requirements for the project included keeping surface area constant, additively manufacturing the part, and minimizing weight. Information such as the material used and what the heat exchanger would be used with was not provided. Since very little information was provided, research had to be done and multiple assumptions were made. The final design included and internal phase change cooling system along with a unique copper-aluminium binary alloy. Design Project 2 had very similar specifications regarding what was required to complete the project.

The full project report can be found here: Design Project 2

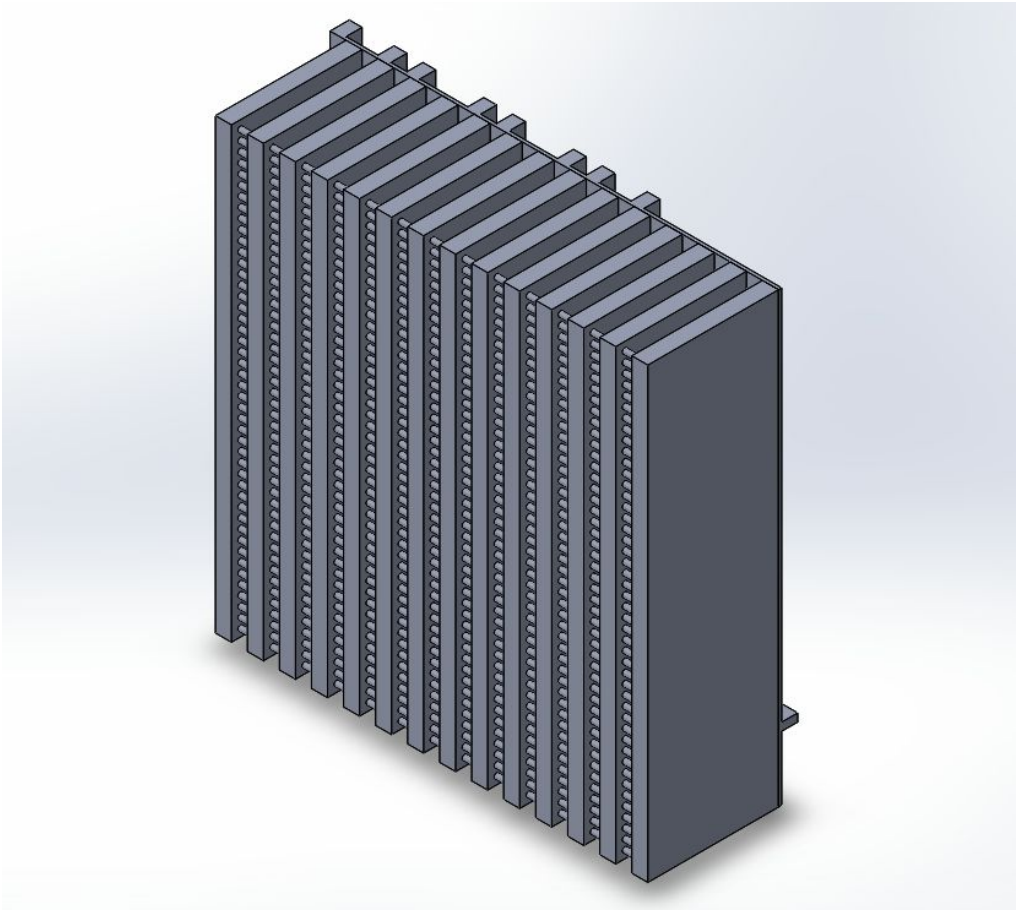

Summary

Introduction to Engineering and Design(EDSGN 100) is a freshman introductory engineering course that all branches of engineering take. The course focuses heavily on the design approach along with a great deal of stress on graphics. EDSGN 100 also teaches students the basics of Computer Assisted Design using Solidworks solid modeling software. The course encompassed many topics that started out with learning the basics of solid modeling and graphic design. After the basics, the first design project was introduced with its goal being to design a cost effective dumpling maker. The design project was completed to the fullest potential for first year students. The first design project was quickly followed by the second which had a larger variance. The heat exchanger was pursued and offered a plethora of new challenges and tasks. One such task was to create the prototype using 3D additive manufacturing technology which in itself was a hefty challenge. The personal CAD project was a good rap-up for the CAD section of the course and allowed students to design an entertainment center. The information gained from this course will be useful for all engineering majors in future classes and well beyond into their careers.