EDSGN 100: Introduction to Engineering Design

Section 009
Team 6
http://www.personal.psu.edu/kam6809/homepage/edsgn100_sp16_section09_team6_dp2.pdf

Design Project 2:
Additively Manufactured Heat Exchanger

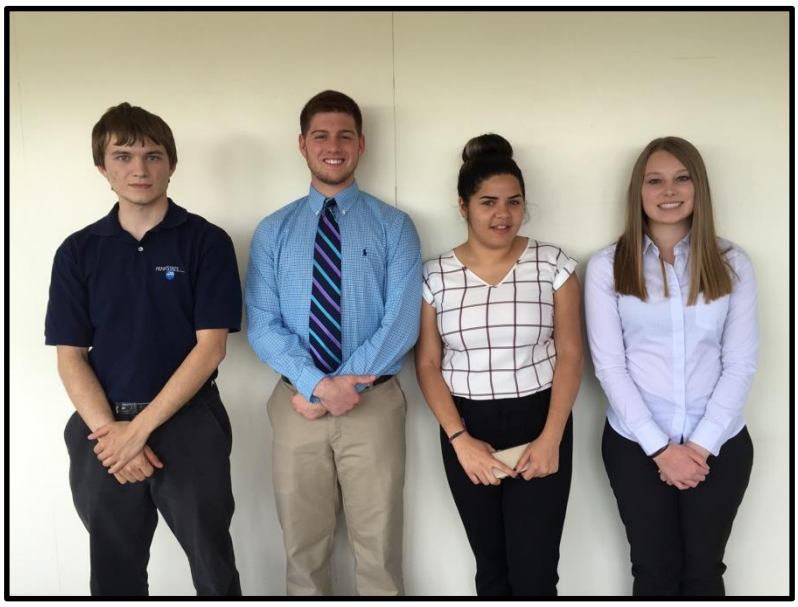

Submitted by: Kristof Marrecau, Nick Pytel, Meghan Morris, Elisvellie Turbi
Submitted to: Xinli Wu on 29-April-2016

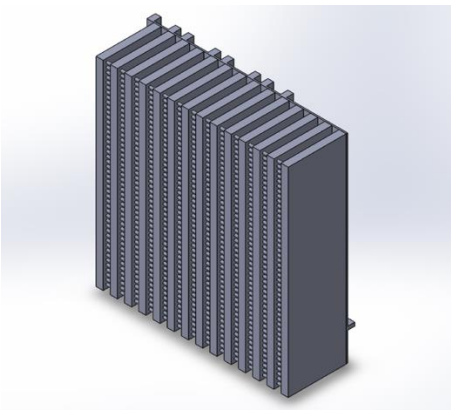

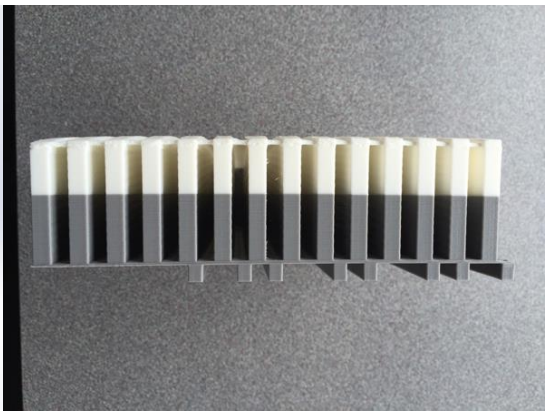

Spring 2016

Abstract (Elisvellie Turbi)

This report contains the design approach for the remodeling of the Lockheed Martin Heat Exchanger. In addition, this report also displays explicit detail of the final design and its prototype while also providing engineering analysis.

Table of Contents (Kristof Marrecau)

Abstract (Elisvellie Turbi) 2
Introduction (Kristof Marrecau) 4
Problem Statement (Kristof Marrecau) 4
Mission Statement (Elisvellie Turbi) 5
Design Specifications (Kristof Marrecau) 5
Gantt Chart (Elisvellie Turbi) 5
Concept Generation (Team) 6
Rationale (Meghan Morris) 8
Design Selection Matrices (Kristof Marrecau) 9
Description of Best Design Selected (Meghan Morris) 9
Design Drawings (Nick Pytel) 10
Scale and Digital Images (Elisvellie Turbi) 13
3D Printing (Kristof Marrecau) 13
Design Features (Nick Pytel) 13
Working Mechanism (Nick Pytel) 14
Conclusion (Meghan Morris) 15
PowerPoint Slides 16
Tri-Fold Brochure 17
References (Meghan Morris) 18
Acknowledgements (Team) 19

Contact Information:

Kristof Marrecau

Nick Pytel

Meghan Morris

Elisvellie Turbi

Introduction (Kristof Marrecau)

The objective of this project was to redesign the heat exchanger provided by Lockheed Martin using additive manufacturing. A heat exchanger is a device that transfers heat, from a circuit board for example, to the surrounding air.

Additive manufacturing is defined as the process of joining materials to make objects from 3D model data, usually layer upon layer. This type of manufacturing is both time and cost efficient, especially when there are tough geometric designs and angles in the design. The other manufacturing method is called subtractive manufacturing. An example of subtractive manufacturing would be if a block of steel was shaved down to create a cylinder.

There are many benefits to using additive manufacturing. One of the main ones is a drastic cut on wait time. If a part is additively manufactured, a company can create it themselves using a 3D printer rather than having to order it from a factory and then having to wait for it to be shipped to the company. Another benefit is that there will be no waste of material since the only material used is the material required for the part. This in turns saves money.

Problem Statement (Kristof Marrecau)

Heat exchangers are used in a vast array of consumer appliances and function to transfer heat effectively from point A to point B. With such a large abundance of metals and alloys and even designs, it is important to determine what design can transfer heat most effectively at the least cost and weight.

Mission Statement (Elisvellie Turbi)

The mission was to design and build a prototype of an updated heat exchanger that fulfilled the specifications given by Lockheed Martin. The heat new heat exchanger was to cost less to make than the original as well as cut production time. The prototype of the exchanger needed to be printed additively and could not be altered in size or weight.

Design Specifications (Kristof Marrecau)

1. Redesign an existing heat exchanger for AM. Reference the baseline design found in the provided psu_heat_exchanger.stp file.

2. Choose a proper AM process and material for the heat exchanger.

a. Cost and build time must be taken into account.

b. Sample part can be built using plastic additive technology, but differences in design between plastic-built part and actual part should be reported.

3. Overall size factor must remain as-is and CCA mating features must remain as-is.

4. Internal air-flow thru geometry can change, but surface area must remain constant.

Gantt Chart (Elisvellie Turbi)

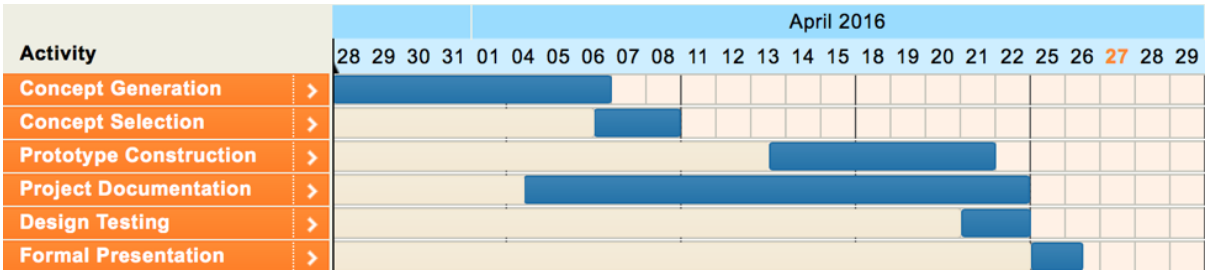

Table 1. Gantt Chart

As can be noted from the Gantt Chart, the entire project was completed within the desired timeline provided by Xinli Wu.

Concept Generation (Team)

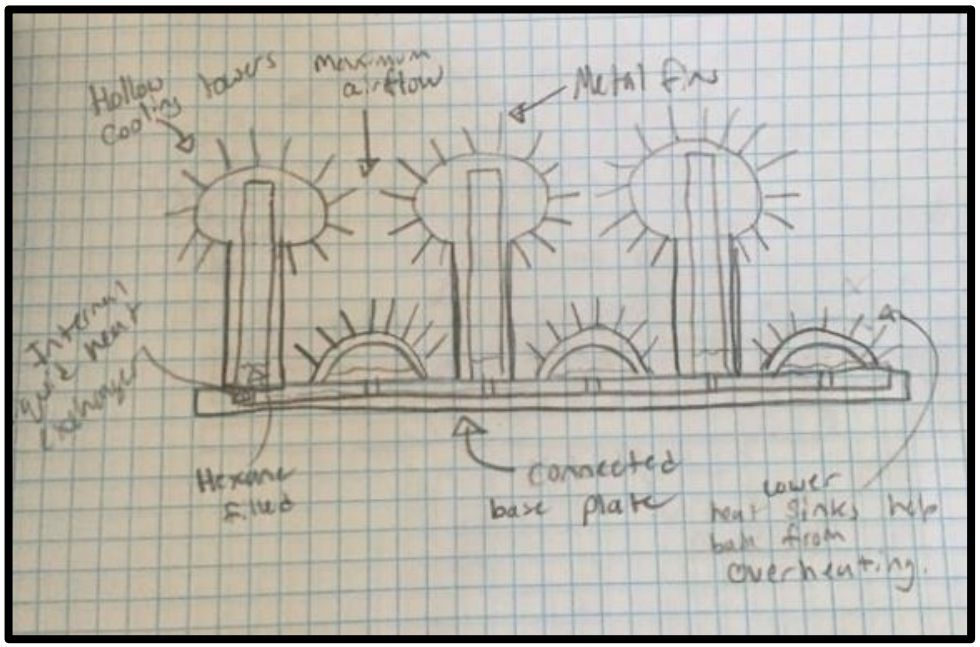

FIG. 1. Design A – Alternating Tower Heat Exchanger

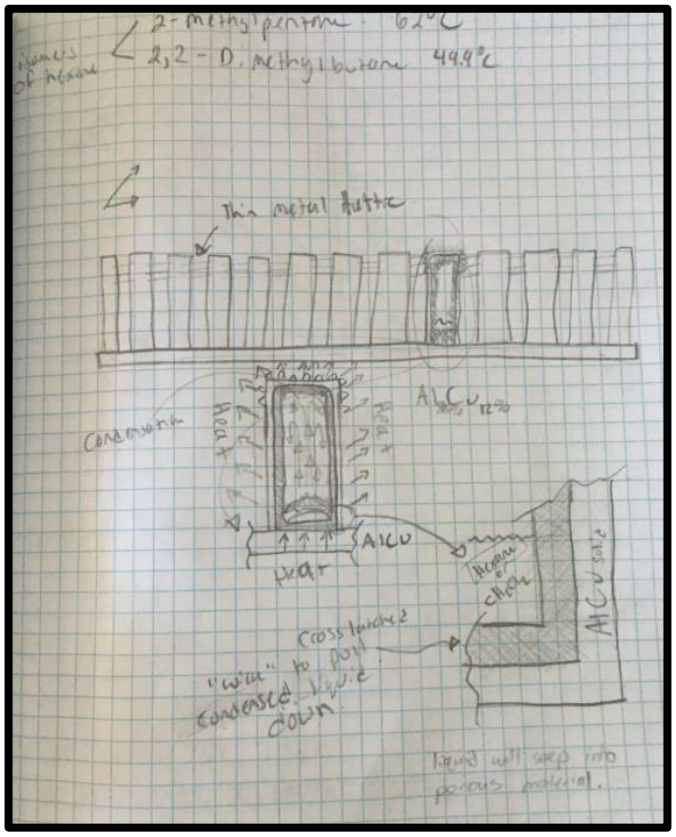

FIG. 2. Design B – Phase Transition Heat Exchanger

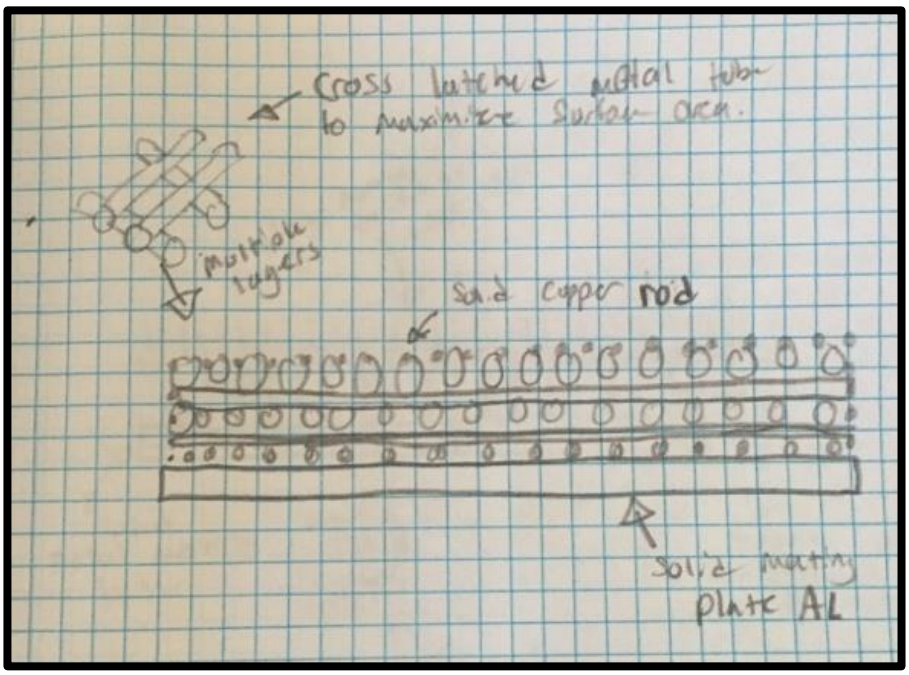

FIG. 3. Design C – Layered Mesh Heat Exchanger

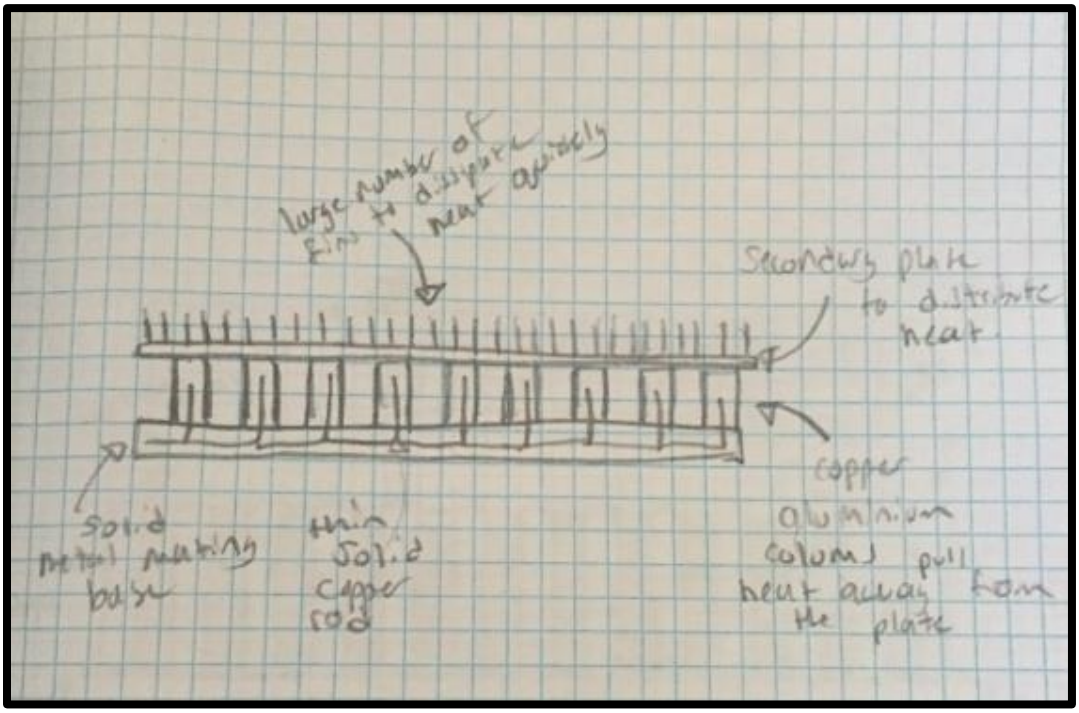

FIG. 4. Design D – Dual Fin Heat Exchanger

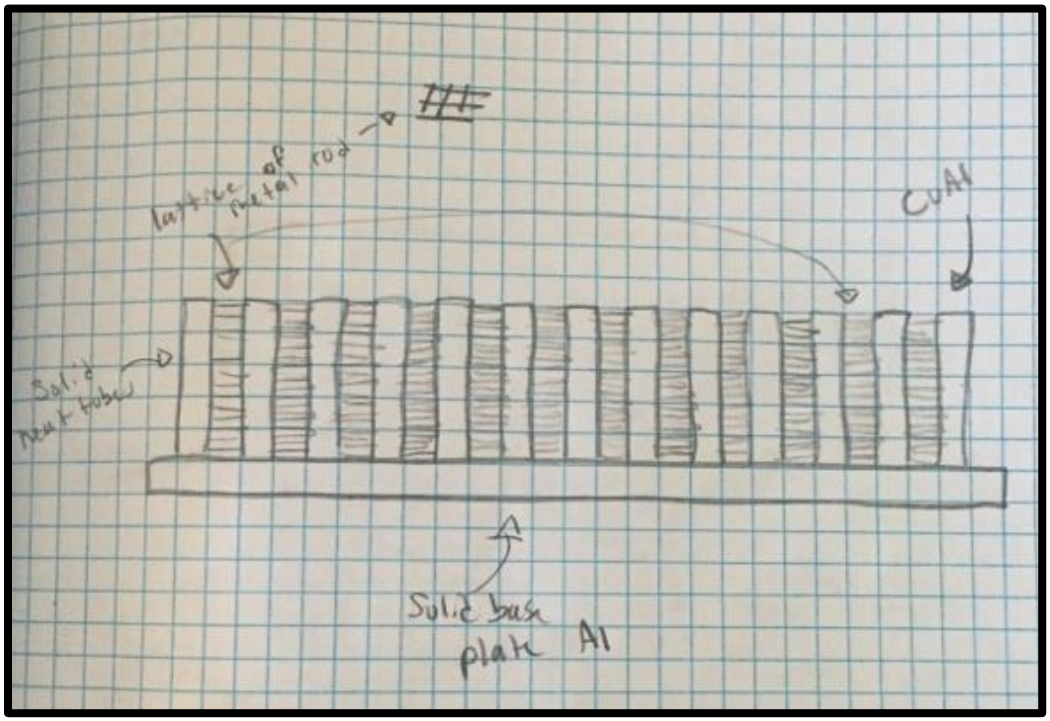

FIG. 5. Design E – Interwoven Mesh Heat Exchanger

Rationale (Meghan Morris)

Lockheed Martin provided the team with a problem that needed a solution. This problem was that Lockheed Martin needed a heat exchanger to be redesigned from a previous model. The heat exchanger needed to be designed using additive manufacturing while keeping cost of materials and time into account. Another challenge to the design was that the surface area and overall size of the new heat exchanger had to be the same as the heat exchanger model that was provided to us. With these criteria, the new heat exchanger would be more efficient, cost effective, and additively manufactured. This would save Lockheed Martin more time and money than their previous heat exchanger.

Design Selection Matrices (Kristof Marrecau)

Selection Criteria	Concepts					
	A (Alternating Tower Heat Exchanger)	B (Phase Transition Heat Exchanger)	C (Layered Mesh Heat Exchanger)	D (Dual Fin Heat Exchanger)	E (Interwoven Mesh Heat Exchanger)	Reference
Heat Transfer	+	+	-	+	-	0
Ease of Production	-	-	+	0	+	0
Compactness	-	+	+	-	+	0
Durability	-	+	0	-	+	0
Weight	0	+	0	+	-	0
Cost	0	0	-	+	-	0
Sum +'s	1	4	2	3	3	0
Sum 0's	2	1	2	1	0	7
Sum -'s	3	1	2	2	3	0
Net Score	-2	3	0	1	0	-
Rank	5	1	3	2	4	-
Continue?	NO	YES	NO	YES	NO	-

Table 2. Concept Screening Matrix

Selection Criteria	Weight	Concepts					
		B (Phase Transition Heat Exchanger)		D (Dual Fin Heat Exchanger)		Reference	
		Rating	Weighted Score	Rating	Weigted Score	Rating	Weighted Score
Heat Transfer	25%	5	1.25	5	1.25	3	0.75
Ease of Production	15%	3	0.45	3	0.45	3	0.45
Compactness	15%	4	0.60	2	0.30	3	0.45
Durability	10%	4	0.40	3	0.30	3	0.30
Weight	20%	3	0.60	3	0.60	3	0.60
Cost	15%	3	0.45	2	0.30	3	0.45
Total Score		3.75		3.2		3.00	
Rank		1		2		-	
Continue?		YES		NO		-	

Table 3. Concept Selection

Description of Best Design Selected (Meghan Morris)

The final design that was chosen was the Phase Transition Heat Exchanger. This heat exchanger is made out of a copper and aluminum alloy that is durable, cost effective, and good at transferring heat. The fins on the heat exchanger are hollow and inside them is liquid hexane.

The liquid hexane helps with the cooling process. This design was chosen based on factors including its superior heat exchanging abilities, its durability, and cost effectiveness.

Design Drawings (Nick Pytel)

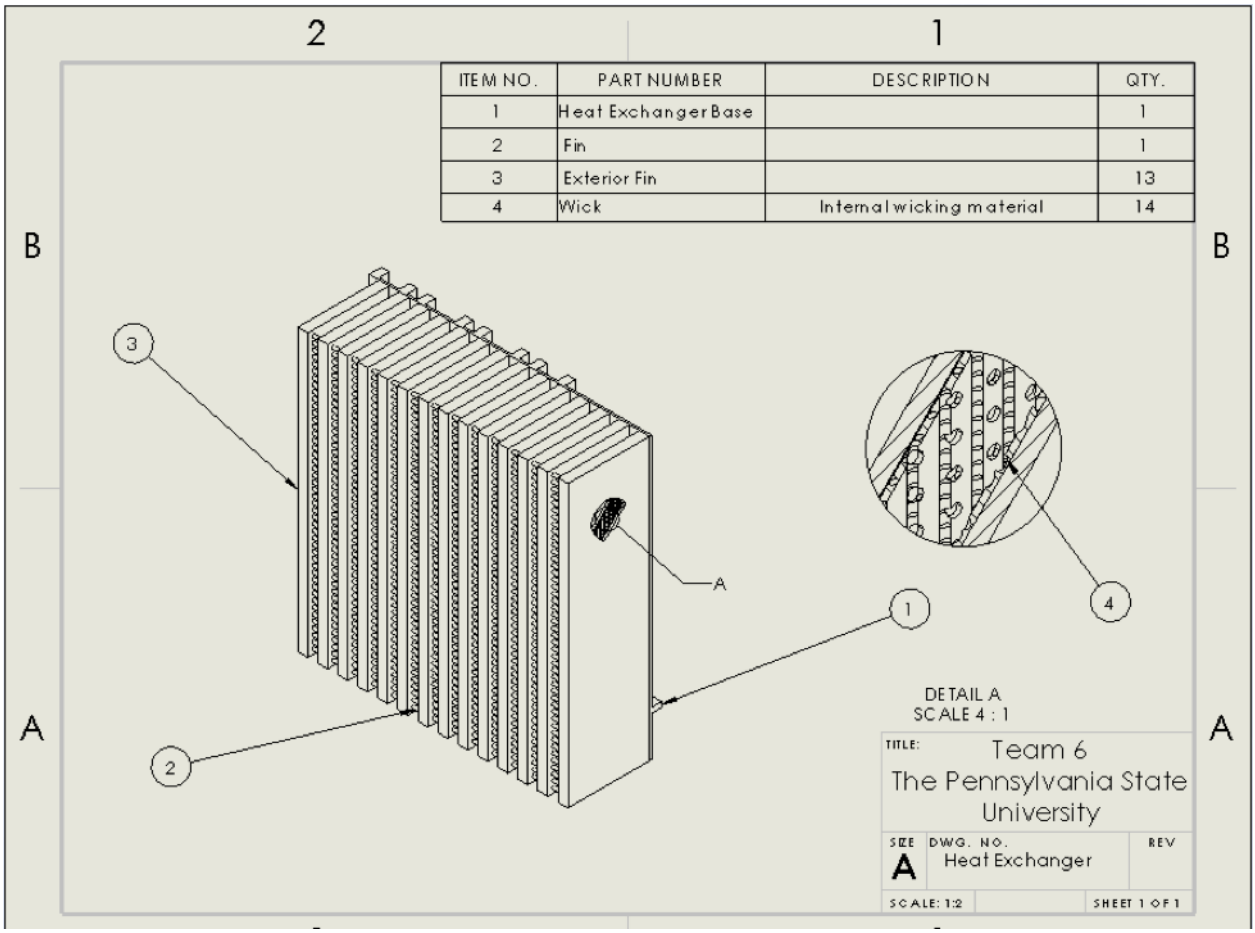

ITEM NO.	PART NUMBER	DESCRIPTION	QTY.
1	Heat Exchanger Base		1
2	Fin		1
3	Exterior Fin		13
4	Wick	Internal wicking material	14

FIG. 6. Phase Transition Heat Exchanger Assembly

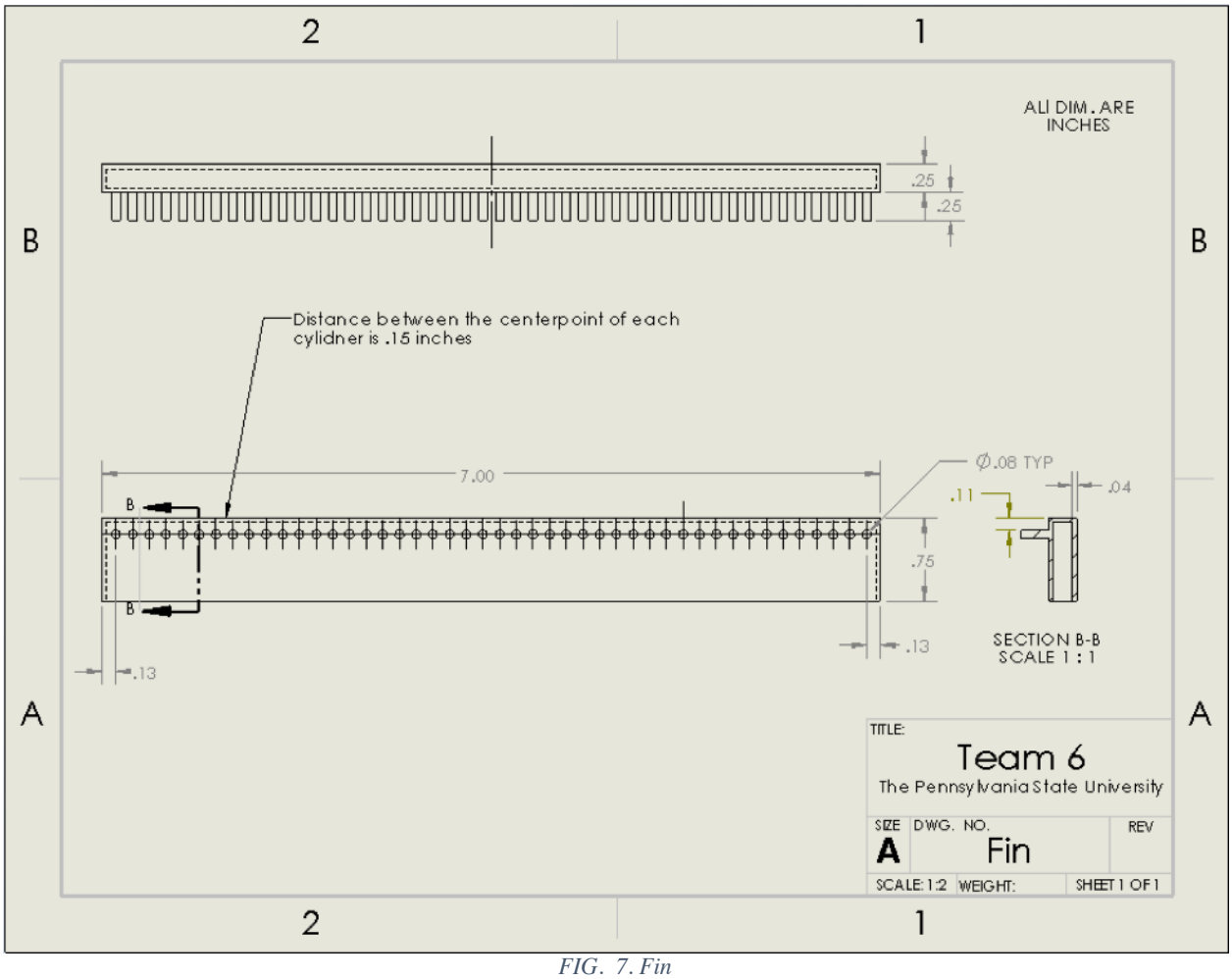
ALL DIM. ARE INCHES
.25
.25
Distance between the centerpoint of each cylidner is .15 inches
7.00
Ø.08 TYP
.11
.04
.75
.13
.13
SECTION B-B
SCALE 1 : 1
TITLE:
Team 6
The Pennsylvania State University
SIZE
A
DWG. NO.
Fin
REV
SCALE: 1:2
WEIGHT:
SHEET 1 OF 1

FIG. 7. Fin

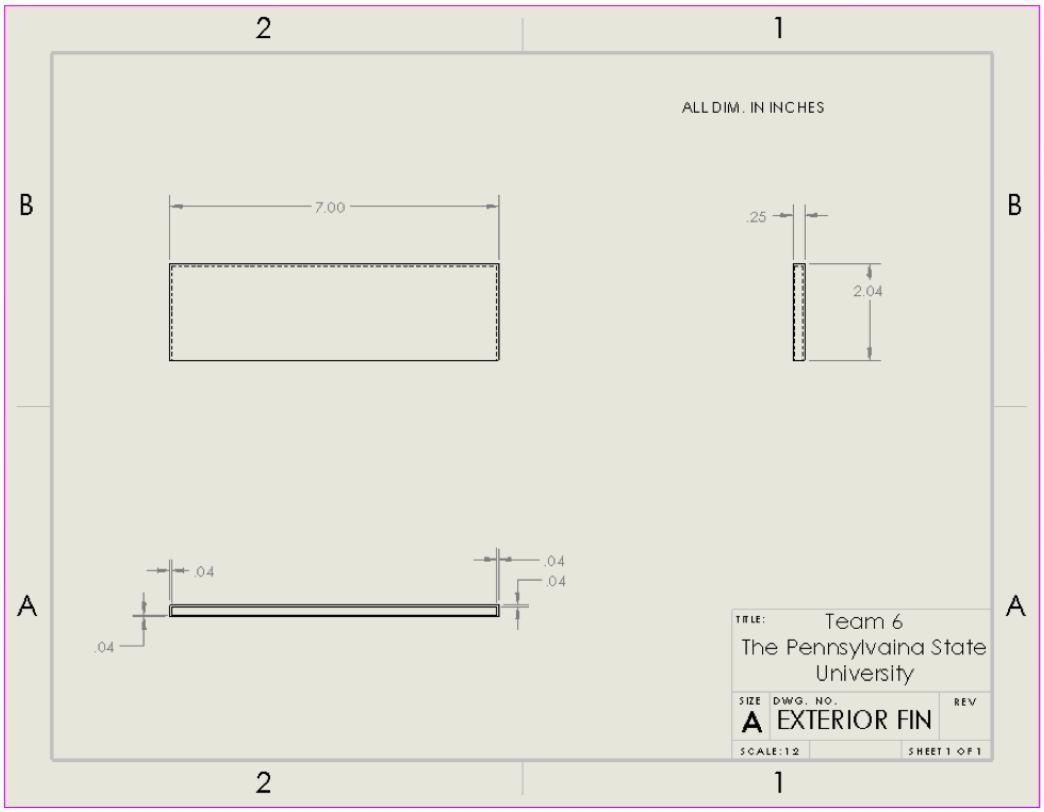

FIG. 8. Exterior Fin

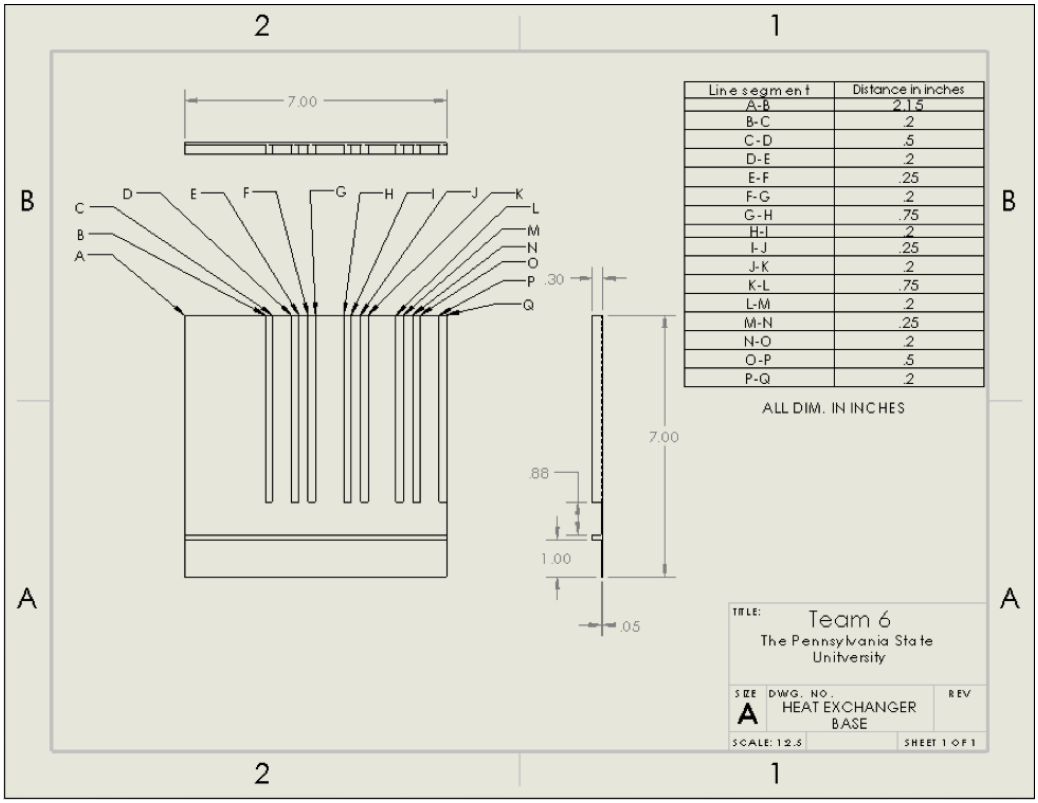

Line segment	Distance in inches
A-B	2.15
B-C	.2
C-D	.5
D-E	.2
E-F	.25
F-G	.2
G-H	.75
H-I	.2
I-J	.25
J-K	.2
K-L	.75
L-M	.2
M-N	.25
N-O	.2
O-P	.5
P-Q	.2

FIG. 9. Heat Exchanger Base

Scale and Digital Images (Elisvellie Turbi)

The scale of our 3D printed prototype is 1:1.

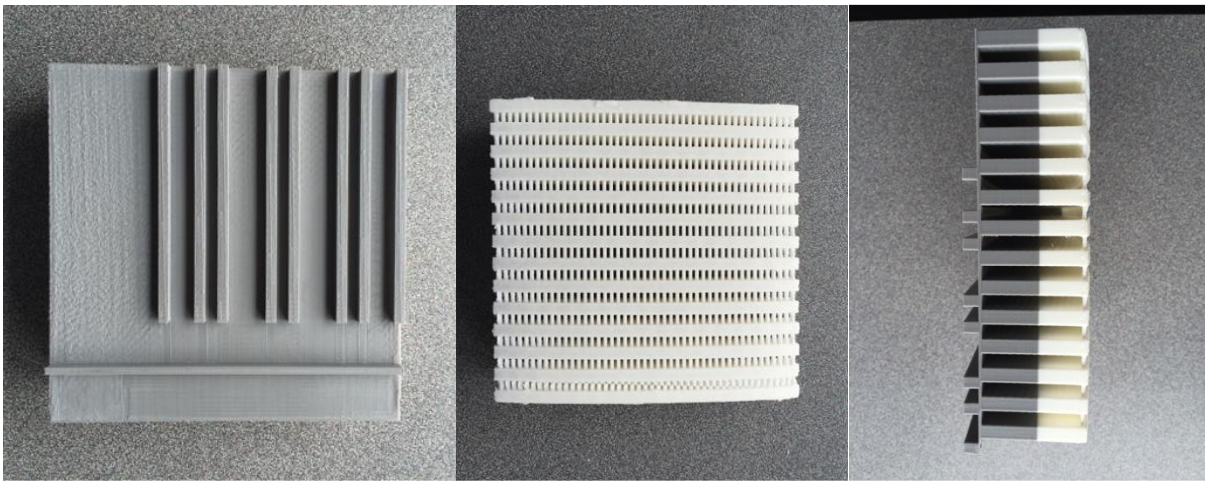

FIG. 10 *FIG. 11* *FIG. 12*

3D Printing (Kristof Marrecau)

The project was 3D printed using a MakerBot 5th Generation printer. The first time the project was attempted to be printed, the model warped due to uneven cooling of the filament during the process – leading to a failed print. The second time, more support materials were added and the print was successful – yielding the prototype in the images above.

Design Features (Nick Pytel)

The PTHE features multiple design improvements that give it an edge over the existing exchanger. The integrated phase change thermal exchange system keeps temperatures cool while also keeping weight low. Either filling liquid or the internal pressure can be varied during the manufacturing process to adjust the temperature which the heat sink will be most effective in. This allows the PTHE design to be specialized for different thermal transfer rates. Additionally,

the self contained system is hands off once attached requiring no external moving parts. The hexane used in the PTHE design is cheap to manufacture and is readily abundant. Since the pressure inside each fin is backfilled with inert nitrogen, there is no risk of fire or reaction inside the fins. The entire structure of the heat exchanger is made with a special binary alloy. The alloy is comprised of 12% (by weight) copper with the rest being aluminum. The benefit of this alloy is that is retains the lightweight properties of aluminum while increasing the thermal characteristics via the added copper. The decrease in specific heat of the aluminum can be as significant as 30% (with 12% cooper). The proportionally small amount of copper not only keeps the weight low, but the cost as well.

Working Mechanism (Nick Pytel)

The PTHE operates by taking a new spin on a classic method commonly used in computer heat sinks. Instead of using heat pipes to transfer heat to a fin bank that is typically a large distance away, the design uses heat piping techniques directly inside each fin. Each fin is comprised of a thin metal shell, a thin metal membrane which lines the interior of the shell, and a small amount of liquid hexane in each fin. As the base plate of the heat sink warms, it increases the vapor pressure of the liquid hexane inside each fin. Once the temperature reaches approximately 50 degrees centigrade (can very depending on the structural isomer), the hexane will boil and carry large amounts of heat to the tips of the fin. The hexane then cools, re-condenses, and returns back to the bottom of the fin to repeat the process. The entire assembly is made with a binary copper-aluminum alloy which can increase thermal transfer by 30%.

Conclusion (Meghan Morris)

With the final heat exchanger design that was chosen, the Phase Transition Heat Exchanger, the team was able to accomplish all of the goals that Lockheed Martin provided. The heat exchanger was the same size as the original design and used an additive manufacturing process while still keeping cost and time needed for production in mind. One of Lockheed Martin's goals for the project was to use additive manufacturing, which saves money by cutting down on wasted materials. The chosen design accomplished this by using 3D printing and cut down on the cost of the materials as well. This design was the best of the designs that were brainstormed because it excelled at exchanging heat, it was durable, and cost effective.

PowerPoint Slides

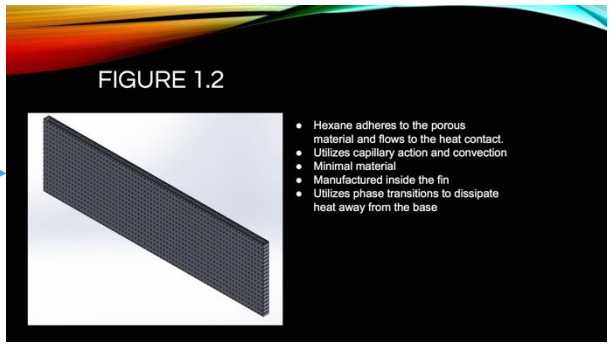

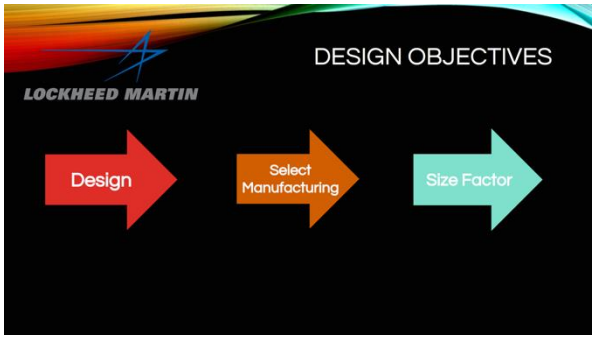

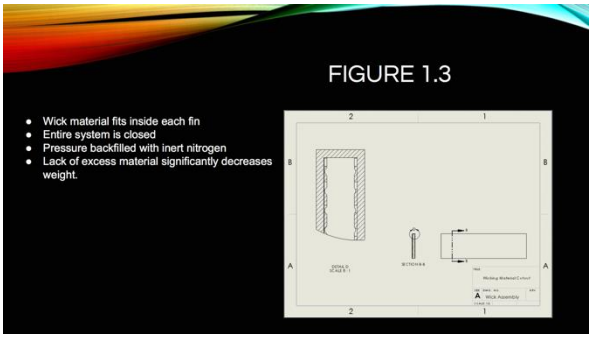

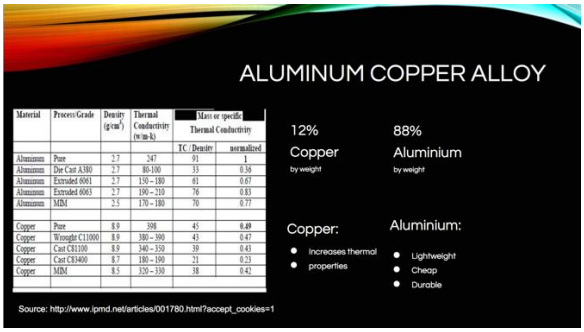

Material	Process/Grade	Density (g/cm^3)	Thermal Conductivity (w/m-k)	Mass or specific Thermal Conductivity	
				TC / Density	normalized
Aluminum	Pure	2.7	247	91	1
Aluminum	Die Cast A380	2.7	80-100	33	0.36
Aluminum	Extruded 6061	2.7	150 – 180	61	0.67
Aluminum	Extruded 6063	2.7	190 – 210	76	0.83
Aluminum	MIM	2.5	170 – 180	70	0.77
Copper	Pure	8.9	398	45	0.49
Copper	Wrought C11000	8.9	380 – 390	43	0.47
Copper	Cast C81100	8.9	340 – 350	39	0.43
Copper	Cast C83400	8.7	180 – 190	21	0.23
Copper	MIM	8.5	320 – 330	38	0.42

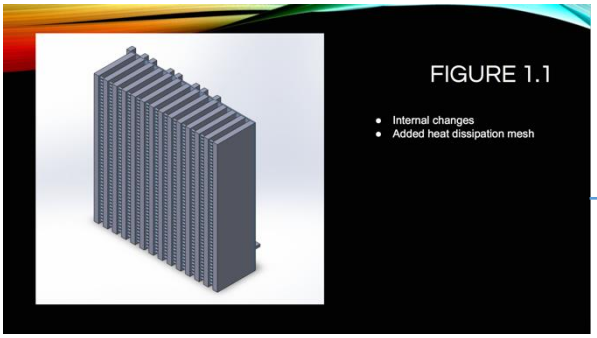

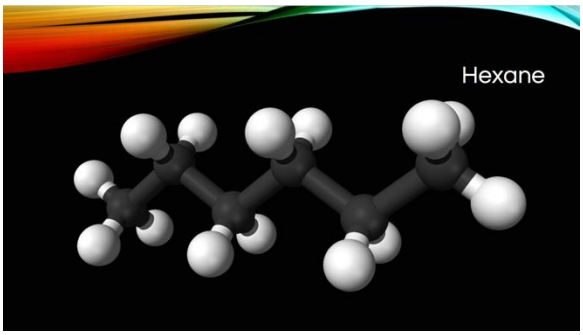

Tri-Fold Brochure

Team 6

(From Left) Nick Pytel , Kristoff Marrecau, Elisvellie Turbi, Meghan Morris

Design Specifications

- Made from a specialized copper-aluminium bronze
- Filled with liquid hexane to increase thermal transfer
- Surface area consistent with original design
- Low cost of production
- Internal heat exchange system significantly reduces weight
- Wicking material ensures proper function in all orientations

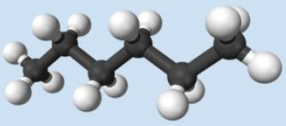

Hexane Molecule

LOCKHEED MARTIN

PennState

Phase Transition Heat Exchanger

Introduction to Engineering & Design

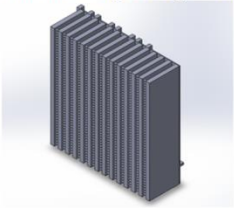

Submitted by:
Kristof Marrecau
Meghan Morris
Nick Pytel
Elisvellie Turbi

Design Requirements

- Redesign an existing heat exchanger
- Use additive manufacturing
- Overall size of heat exchanger should remain the same as original design provided
- Surface area should remain the same as original design
- Air flow through geometry can change

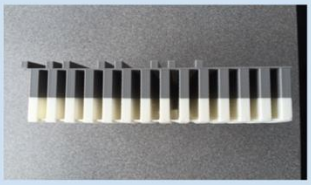

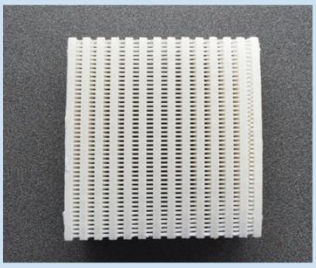

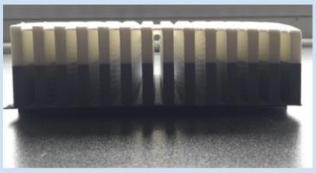

Design Process

The design was first created by reviewing the technical specifications presented by Lockheed and brainstorming. Through the brainstorming process, many unique ideas were created and then were narrowed down. Once the selection process was complete, details of the design were worked out and in-depth research on the materials were conducted. The prototype was then constructed in Solidworks along with the required drawings. The completed design was then transferred to a 3-D printable format. It was then manufactured using plastic additive technology which is what the final prototype is made of.

References (Meghan Morris)

"Current Project | SEDTAPP First-Year Engineering Design." *SEDTAPP FirstYear Engineering Design*. Lockheed Martin, n.d. Web. 27 Apr. 2016. https://sites.psu.edu/engineeringdesignproject/first-year-engineering-design/current-project/

Mondolfo, L. F. "Aluminum Alloys." *Google Books*. N.p., 24 Sept. 2013. Web. 27 Apr. 2016. https://books.google.com/books?id=Xf4kBQAAQBAJ&source=gbs_slider_cls_metadata_7_mylibrary

Acknowledgements (Team)

Team 6 would like to thank Lockheed Martin for presenting us with this design project and allowing us to participate. Working on this project was a great experience that taught us skills that we will use with future design projects. Team 6 would also like to thank Xinli Wu for helping us along the way and answering any questions we had.