PennState
College of Engineering

USB D-Link Hub Bracket

Team 4 Spring 2016
Matthew Bell, Tim Morrow, Nicholas Lewis, Hao Jing

LOCKHEED MARTIN

Introduction

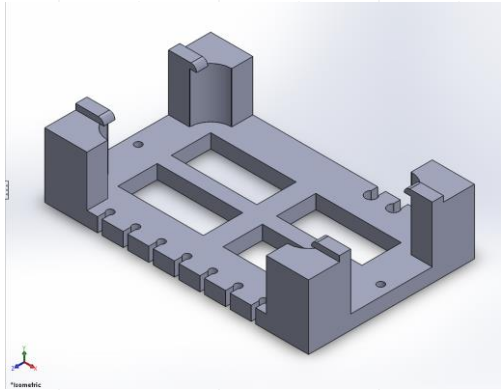

For the advancement of a custom avionics mission system, it will require a USB Hub bracket as a debug and auxiliary mounting device. It will allow the bracket to have an increased capacity and vertical mounting.

Design Objectives

The objective of this design was to make changes to the present USB hub mounting bracket.

- Change from Horizontal to Vertical mounting
- Design New Cable Retention System
- Design for 7 ports

Design Approach

Our team took several steps to make this design:

- Brainstorming
- Sketching
- Design Matrices
- Modeling
- Testing
- Manufacturing

Analysis of Design

- Structure
- Material
  - Biodegradable (PLA)
  - Easily Printed
- Vibration Loading

89 Hz

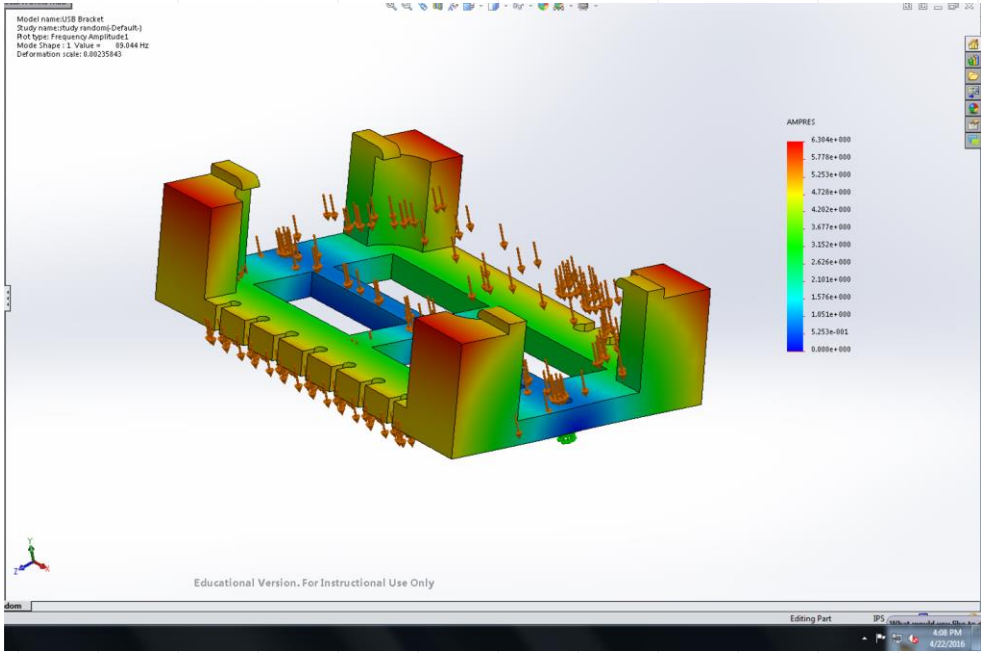
Model name:USB Bracket
Study name:Study random(-Default-)
Plot type: Frequency Amplitude1
Mode Shape : 1 Value = 89.044 Hz
Deformation scale: 0.00235843
AMPRES
6.304e+000
5.778e+000
5.253e+000
4.728e+000
4.202e+000
3.677e+000
3.152e+000
2.626e+000
2.101e+000
1.576e+000
1.051e+000
5.253e-001
0.000e+000
Educational Version. For Instructional Use Only
Editing Part
IPS
4:08 PM
4/22/2016

245 Hz

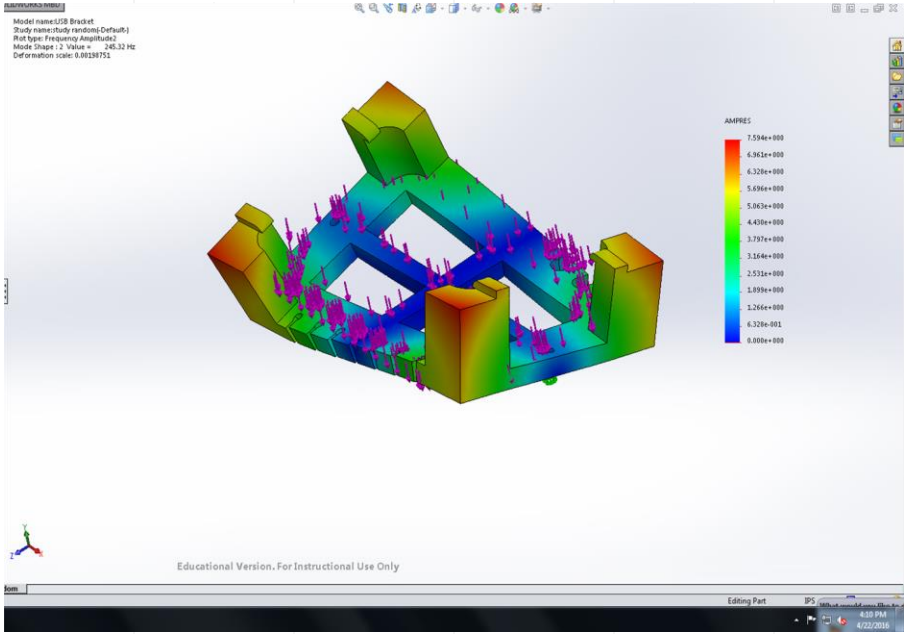
Model name:USB Bracket
Study name:study random(-Default-)
Plot type: Frequency Amplitude2
Mode Shape : 2 Value = 245.32 Hz
Deformation scale: 0.00198751
AMPRES
7.594e+000
6.961e+000
6.328e+000
5.696e+000
5.063e+000
4.430e+000
3.797e+000
3.164e+000
2.531e+000
1.899e+000
1.266e+000
6.328e-001
0.000e+000
Educational Version. For Instructional Use Only
Editing Part
IPS
4:19 PM
4/22/2016

296 Hz

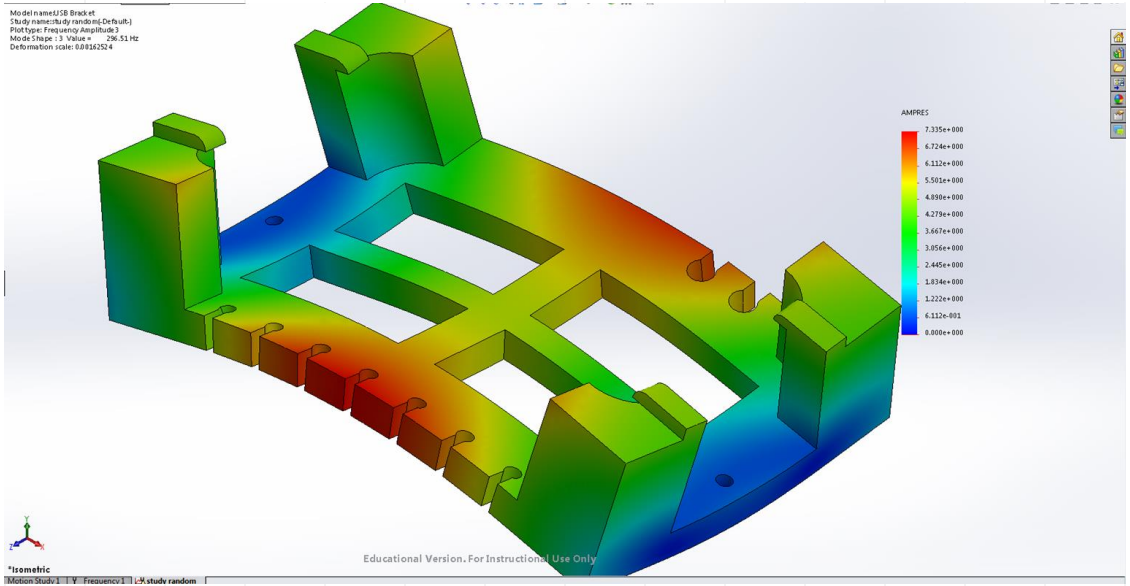
Model name:USB Bracket
Study name:study random(-Default-)
Plot type: Frequency Amplitude3
Mode Shape : 3 Value = 296.51 Hz
Deformation scale: 0.00162524
AMPRES
7.335e+000
6.724e+000
6.112e+000
5.501e+000
4.890e+000
4.279e+000
3.667e+000
3.056e+000
2.445e+000
1.834e+000
1.222e+000
6.112e-001
0.000e+000
Educational Version. For Instructional Use Only
*Isometric
Motion Study 1
Frequency 1
study random

455 Hz

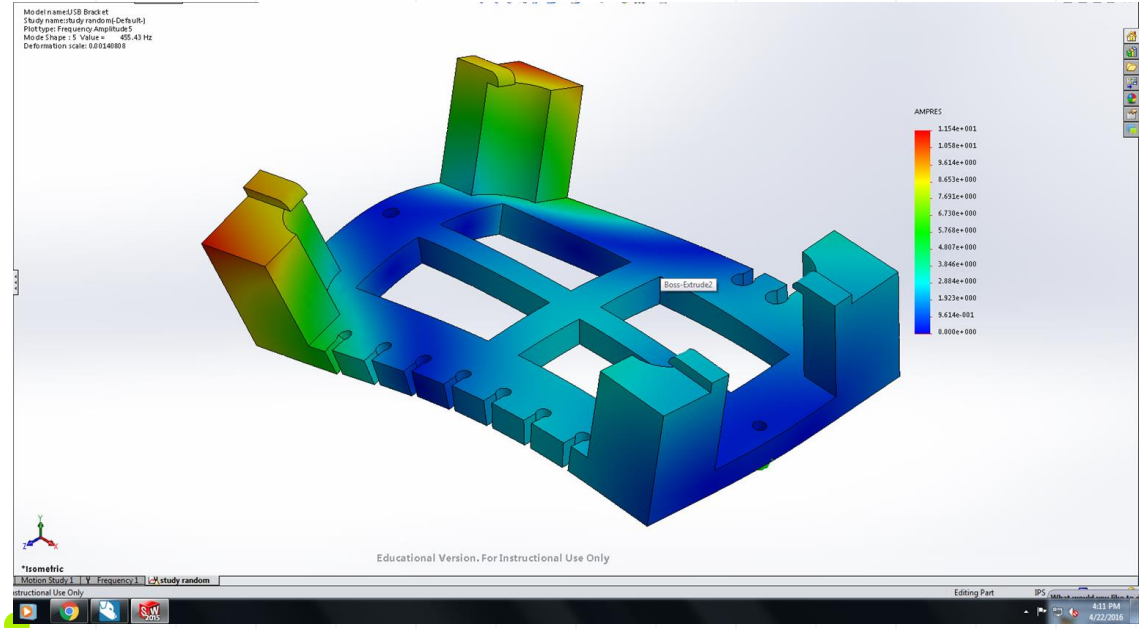
Model name:USB Bracket
Study name:study random(-Default-)
Plot type: Frequency Amplitude 5
Mode Shape : 5 Value = 455.43 Hz
Deformation scale: 0.00140808
AMPRES
1.154e+001
1.058e+001
9.614e+000
8.653e+000
7.691e+000
6.730e+000
5.768e+000
4.807e+000
3.846e+000
2.884e+000
1.923e+000
9.614e-001
0.000e+000
Boss-Extrude2
Educational Version. For Instructional Use Only
*Isometric
Motion Study 1
Frequency 1
study random
Editing Part
IPS
4:11 PM
4/22/2016

Thank You

Any Questions?