Tilted Bowl Design

Section 010

Team 3

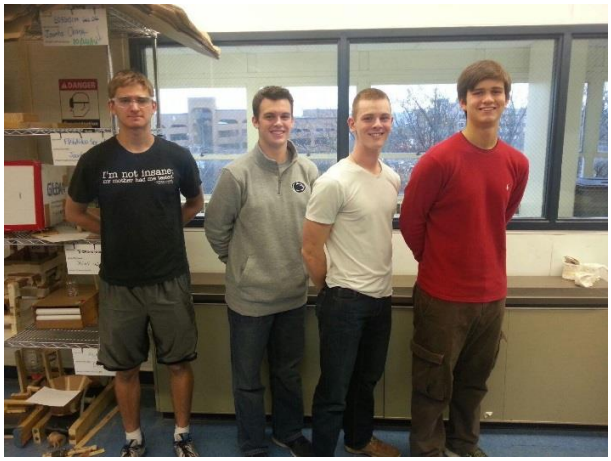

Submitted by:

Nicholas Quiroz, Ryan Kirkpatrick, Joshua Moyer, Martin Sipe

Submitted to: Dr. Xinli Wu

http://www.personal.psu.edu/naq5009/edsgn100_fa14_section10_team3_dp1.pdf

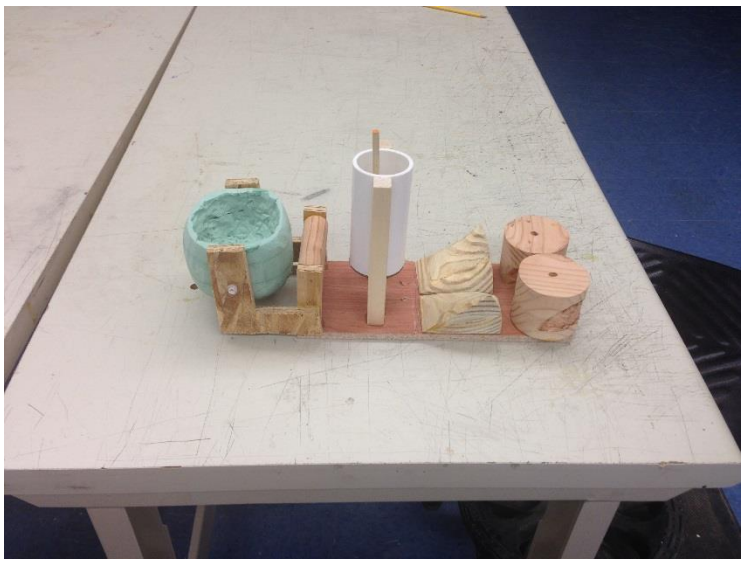

Executive Summary

This report documents the efforts and outcomes of Groups 3's attempt to design a dumpling maker. Contained within are the ideas generated, and the methods by which Group 3 was able to model the final design. All of the following information was vital to any conclusions that we drew, and any external sources are cited.

Table of Contents

1. Introduction Naq5009@psu.edu

2. Description of the Design Task

a. Problem Statement Naq5009@psu.edu

b. Mission Statement Naq5009@psu.edu

c. Design Specifications Naq5009@psu.edu

3. Design Approach

a. Gantt Chart Rdk5152@psu.edu

b. Customer Needs Assessment mms5976@psu.edu

c. Concept Generation mms5976@psu.edu

d. Concept Screening Matrix Jkm5394@psu.edu

4. Final Design and Prototype

a. Working Drawings Rdk5152@psu.edu

b. Prototype Rdk5152@psu.edu

c. Operation Instructions Naq5009@psu.edu

5. Engineering Analysis

a. Description of Working Mechanism Naq5009@psu.edu

b. Cost Analysis Jkm5394@psu.edu

6. Conclusion Naq5009@psu.edu

7. Acknowledgements

1. Introduction

In this, our first design project of the year, we were tasked with creating a dumpling maker for in home use and for small business as well. This assignment was given to challenge us and provide us with an opportunity to work in groups. Due to the fact that this course is an Engineering Design Course, the main focus of this project was on our methods of generating a suitable design. With our given knowledge, it would be almost impossible for us to create a perfect device, but using the skills that we have acquired over the first half of this course, we have been able to construct a plausible, reliable, and successful design.

2. Description of the Design Task

Problem statement:

"The current methods of hand making dumplings are inefficient and the machines that do exist to speed up the process are expensive and impractical for family and small business use."

Team Three mission statement:

"Our mission is to design, build, and prototype a dumpling maker for family and small restaurant use with the following design specifications:

1. It must be automatic or semi-automatic.
2. It should produce at least 10 dumplings per minute
3. The material cost for the machine should not exceed 200$ without justification
4. It must be safe as a food processor, easy to maintain, and dishwasher safe. "

3. Design Approach

The table below (Table 1) is the Gantt chart that was initially created by Group 3.

Gantt Chart Team 3 (Table 1)

ACTIVITY	PLAN START	PLAN DURATION
Define Problem	1	1
Create Mission Statement	1	1
Create Gantt Chart	1	1
Customer Needs Assessment	1	2
Test Dumplings for Research Purposes	1	1
Brainstorm/Research dumpling making process	2	1
Narrow brainstorming to 5 working designs	2	2
Decide on a Design Approach	2	2
Create a Working Drawing	2	2
Design and create a Prototype	3	2
Working Mechanism and Engineering analys	4	1
Cost analysis of Design	5	2
Present Project Design	6	1

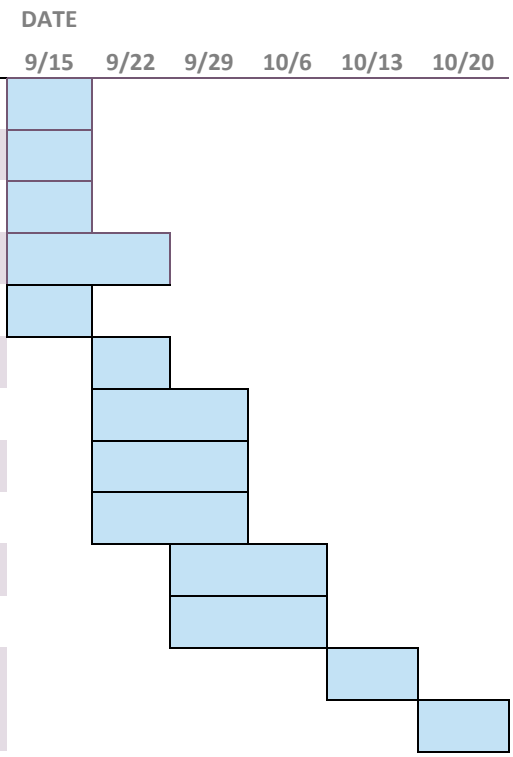

Customer need assessment.

Empire Palace Chinese restaurant Hopewell, PA: The owner clearly was interested in our idea, stating that his workers loathed making dumplings by hand. His constraints were it had to be compact, efficient, and reasonably priced. The owner put special emphasis on the efficiency, we talked about how many per minute and he said at least 10 per minute would be necessary.

Hunan Chinese restaurant Moon, PA While the owner only gave me a short amount of his time, he said since his establishment was small for him to buy something like this it would need to be small and easily storable.

Sesame Inn Mount Lebanon, PA The general manager of the Mount Lebanon store told me they currently use pre-made dumplings and don't run into this problem. However I asked him if he had a machine like this would they consider making their own dumplings in house, he admitted they would if the product was lost cost.

Below (Table 2) is the concept screen matrix that we used to choose from our first ideas.

The criteria that we chose was based off of both our prior knowledge and the customer needs assessment.

Table 2		Scale 1-5			
Selection Criteria	Clamping	Crimp Design	Pincher	Crank Fold	Tilted Bowl
Ease of Use	3	4	3	3	3
Reliability	2	4	2	2	4
Durability	4	3	3	3	4
Portablilty	2	5	1	4	3
Speed	4	3	2	3	3
Cost	2	2	3	3	3
Efficiency	3	3	3	3	3
Safety	5	3	3	4	4

Net Score	25	27	20	25	27
Rank	2	1	3	2	1
Continue?	No	Yes	No	No	Yes

Our conclusion, based off of this Matrix, was that we should combine the crimp and Tilted bowl design. We decided to incorporate both of these ideas into our model.

FIG. 1 Crimp

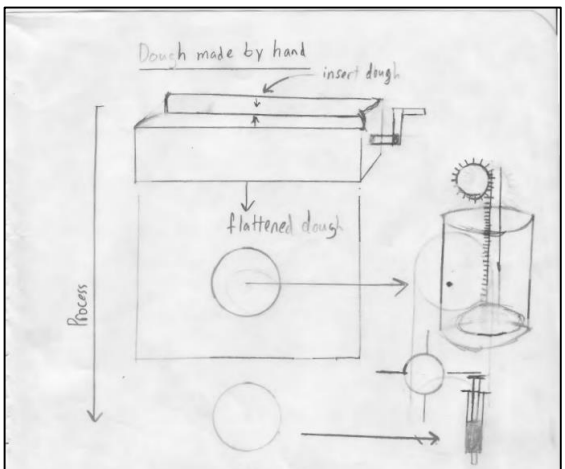

FIG. 2 Clamping

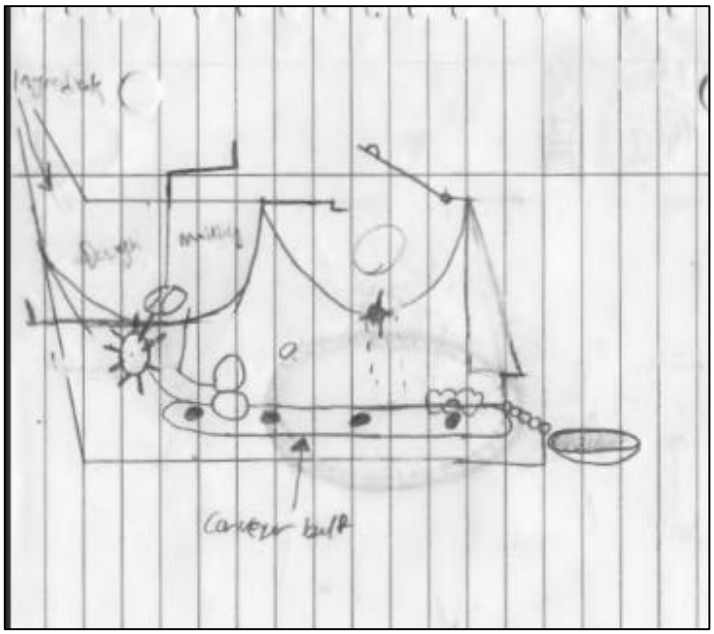

FIG. 3 Crank Fold

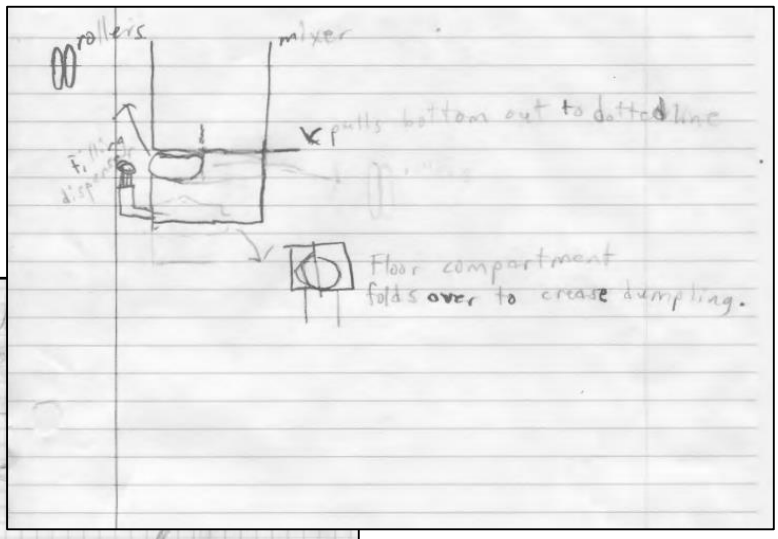

FIG. 4 Tilted Bowl

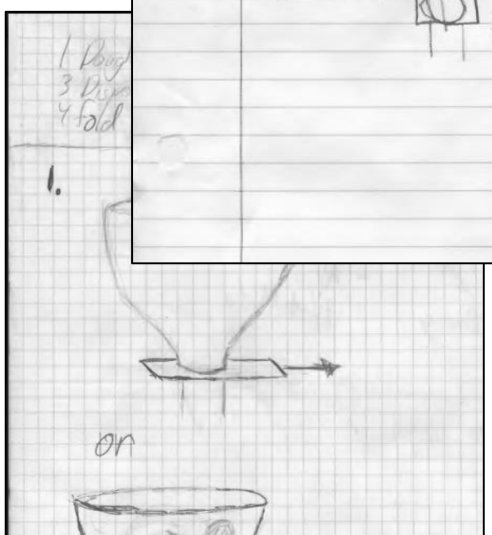

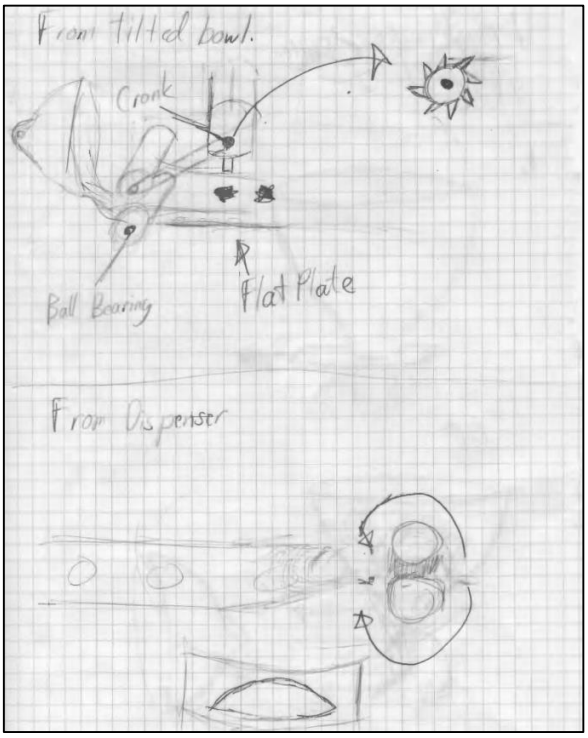

FIG. 5 Tilted Bowl, Continued

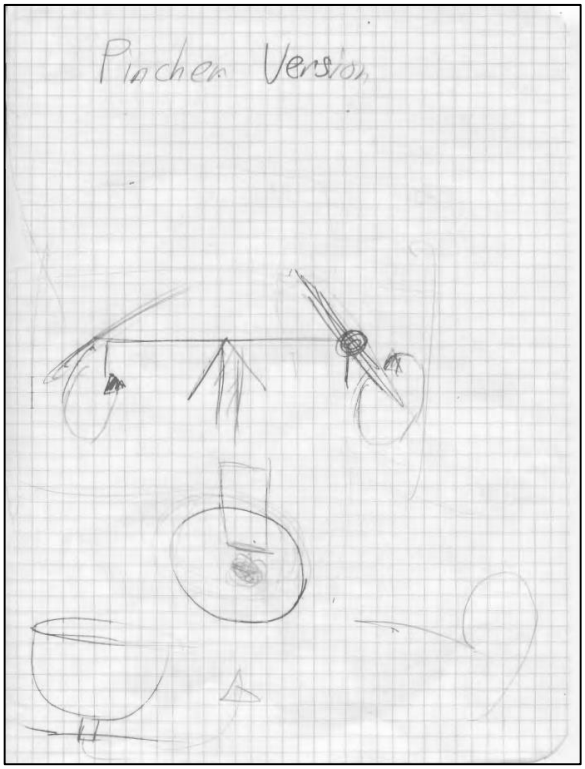

FIG. 6 Pincher Version

4. Final Design and Prototype.

Prototype Pictures

These are images of the Prototype that we created to model our design.

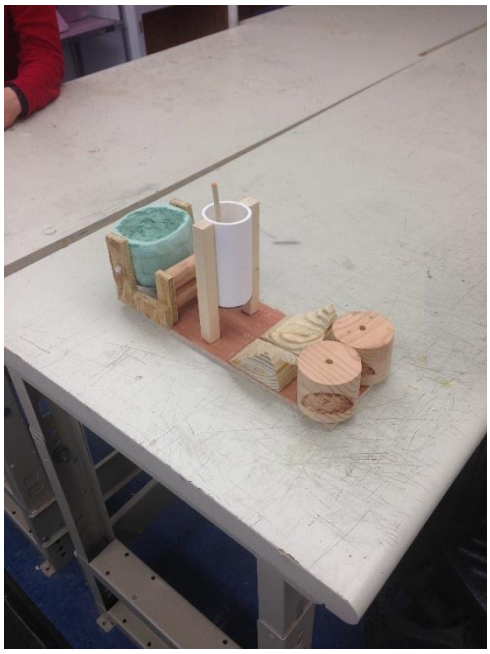

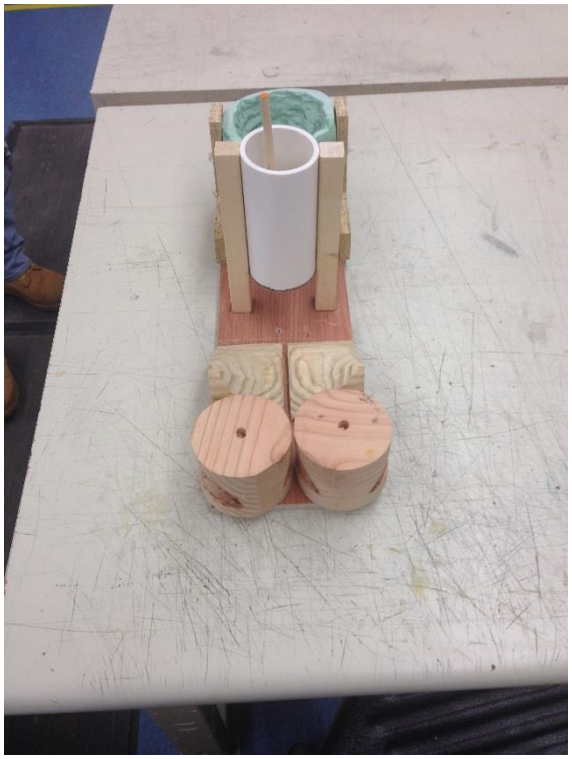

On the subsequent pages will be the three working drawings of our non-standard parts.

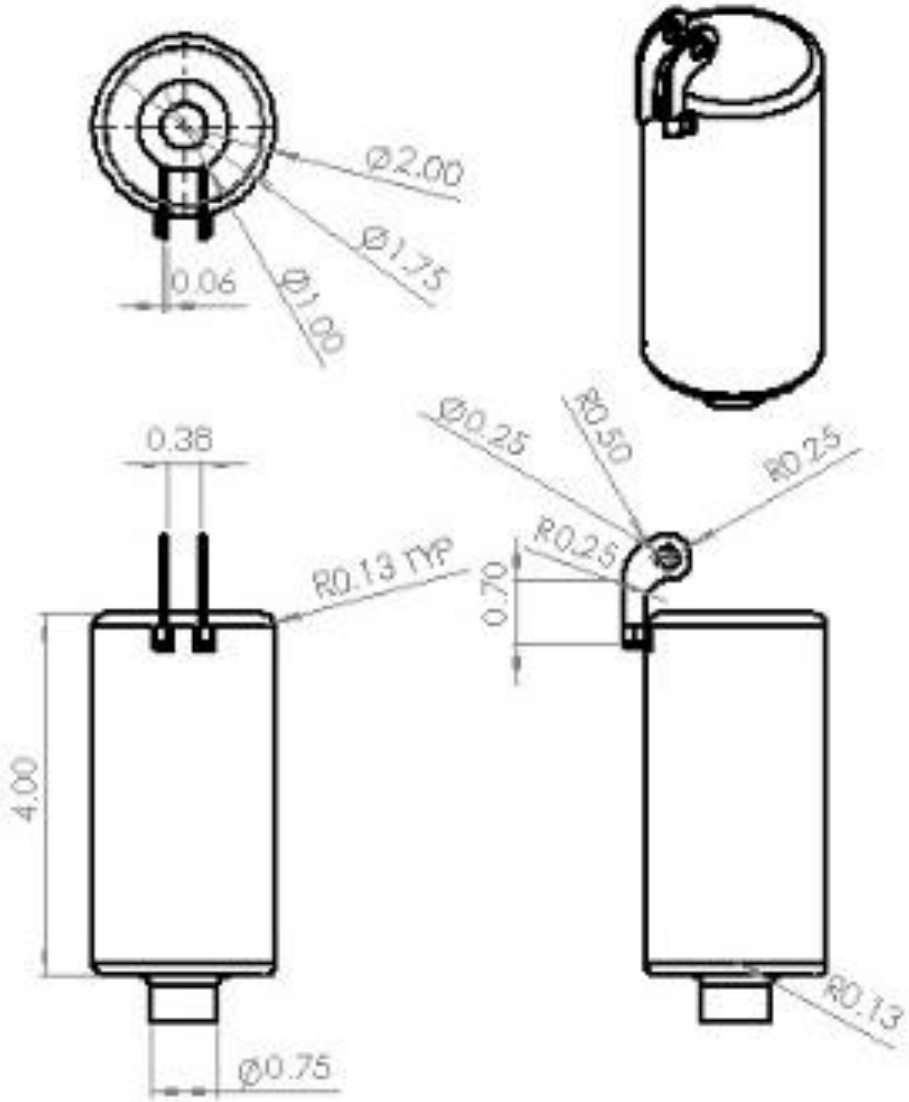

ALL DIMENSIONS STRICTLY IN INCHES

Group 3		
TITLE: Syringe		
SIZE A	DWG. NO. 1	REV
SCALE: 1:2	WEIGHT:	SHEET 1 OF 1

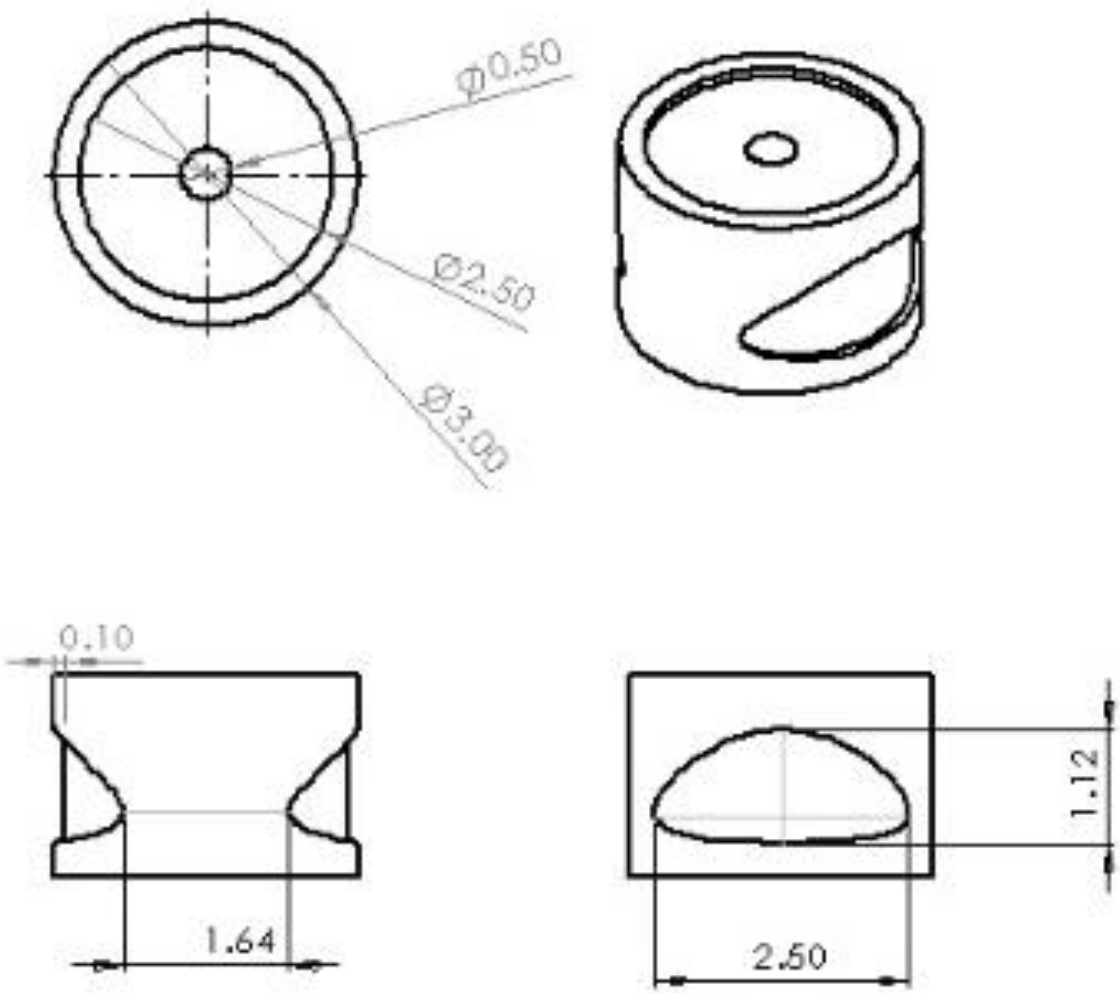

ALL DIMENSIONS STRICTLY IN INCHES

Group 3		
TITLE: Imprinted Cutter		
SIZE A	DWG. NO. 2	REV
SCALE: 1:1	WEIGHT:	SHEET 1 OF 1

5 4 3 2 1

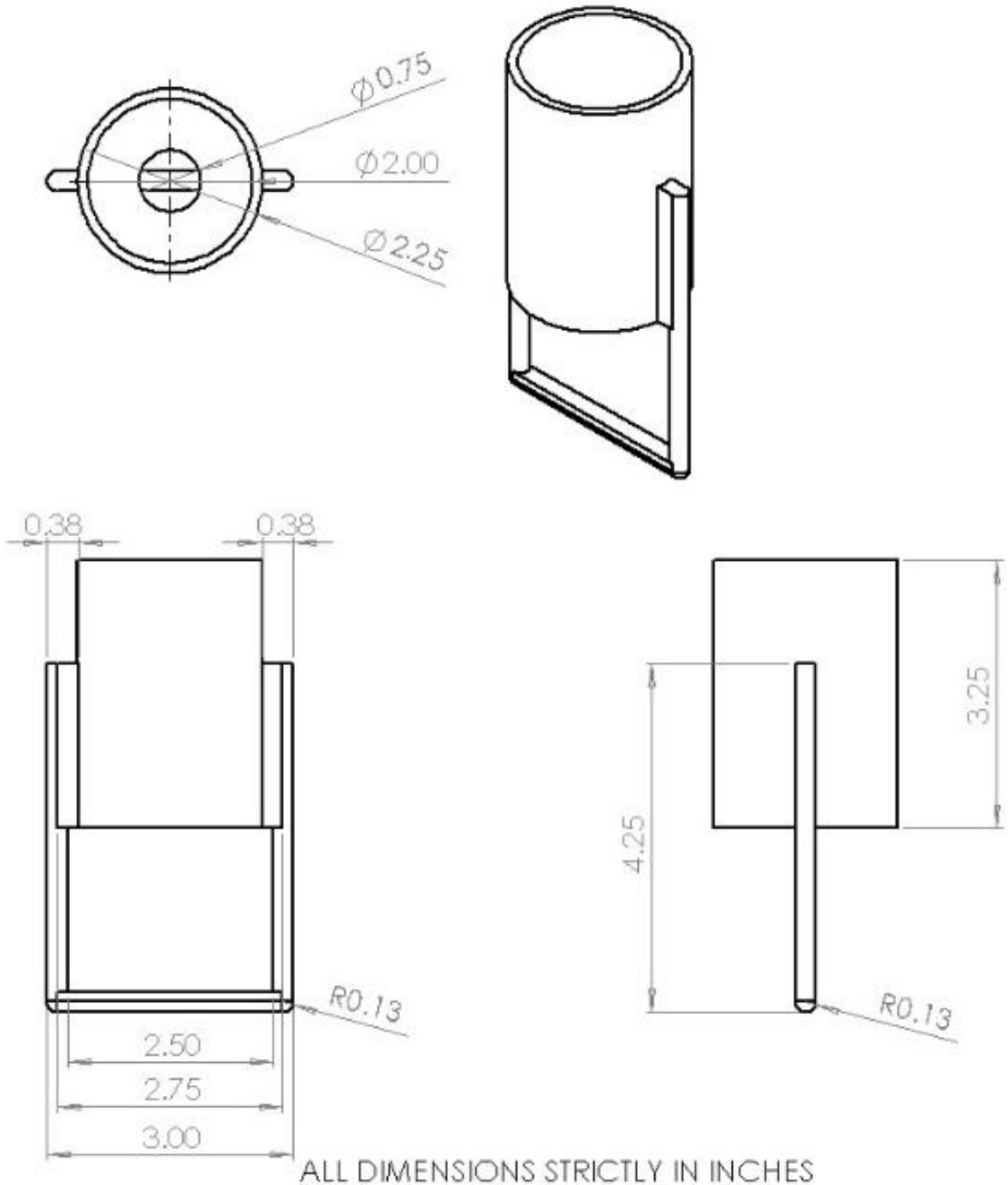

ALL DIMENSIONS STRICTLY IN INCHES

Group 3		
TITLE: Syringe Holster		
SIZE A	DWG. NO. 3	REV
SCALE: 1:1	WEIGHT:	SHEET 1 OF 1

5 4 3 2 1

Operation Instructions

This device would be operated as follows.

1. Mix the flour and water in the bowl at the front of the device.

2. Once the dough is thoroughly mixed, insert the filling into the syringe and put the plunger on top of the syringe

3. Tilt the mixing bowl from the upright position to the pouring position

4. Turn the crank to pull the dough into the rollers.

5. Continue to crank until a satisfactory amount of dumplings are come out the back of the device.

5. Engineering Analysis

This device operates on a five step process.

1. The first step is the mixing of material in the bowl. This provides the dough that the dumpling will be made out of.
2. The next step is to flatten the dough out between the two rollers that are crank operated, so that the dough will be a controlled thickness and width.
3. Next the filling will be dispensed onto the flat dough in set intervals. This will be accomplished through the use of a ratcheted gear system. Once every full rotation of the crank, the plunger in the syringe will move down a set amount and push some of the filling onto the dough.
4. Once the filling has been dispensed, the dough will continue to be pushed along by the crank, but be pushed up a shaped incline to fold it. This will gently fold the dough up into a V-like shape so that it is ready to be fully shaped and cut.
5. Finally, the rotating cutters in the back of the device will imprint the dumpling shape onto the dough with the filling in the center, and cut the access away from the edges, and dispense the completed dumpling out the back of the device.

The following is the Exploded View of the entire assembly

ITEM NO.	PART NUMBER	QTY.
1	Base Plate	1
2	Dough Roller	2
3	Cutout	2
4	Cutout Bracket	1
5	Syringe	1
6	Gear	1
7	Gear Peg	2
8	Roller Pegs	1
9	Syringe Holster	1
10	Plunger	1
11	Bowl	1
12	Bowl Bracket	1
13	Crank	1

SCALE 1:5

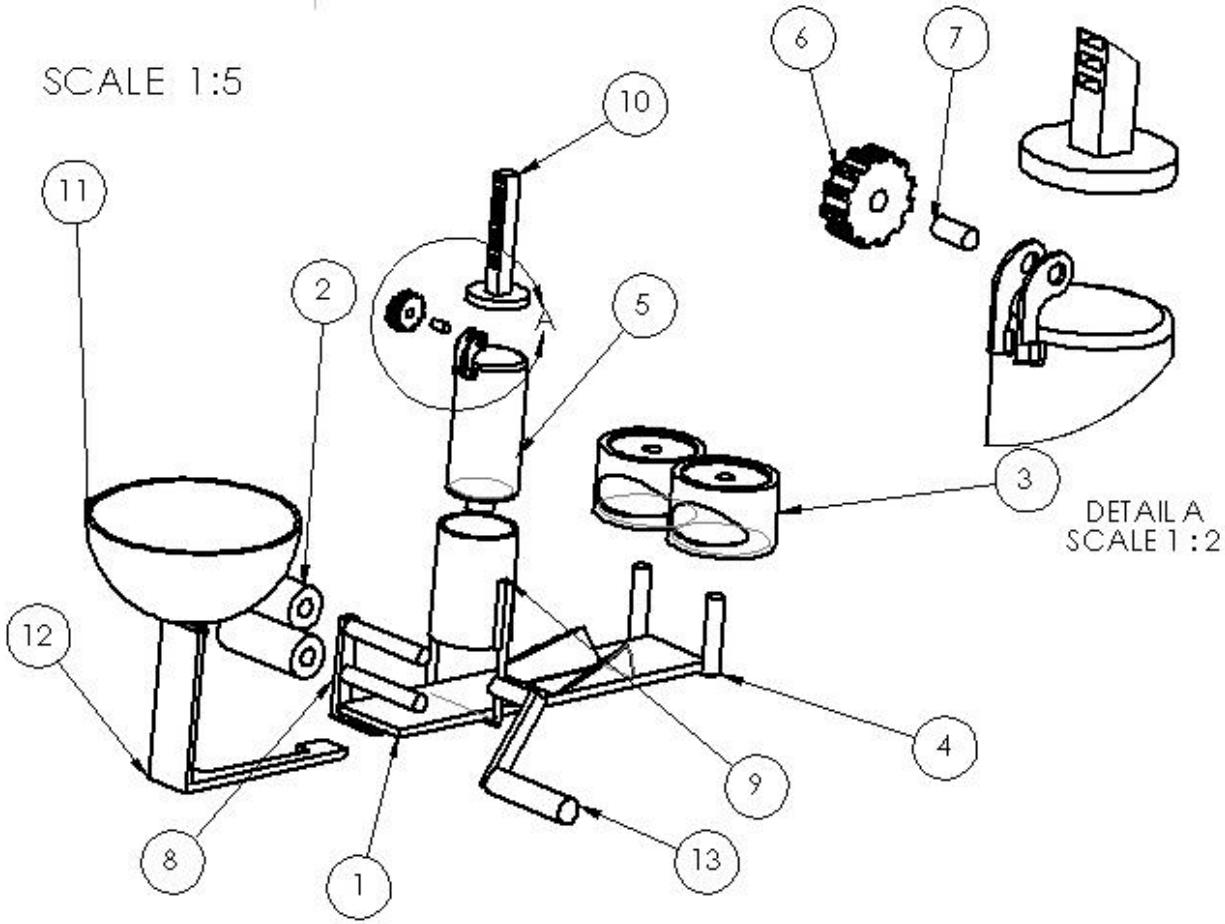

UNLESS OTHERWISE SPECIFIED:
DIMENSIONS ARE IN MILLIMETERS
SURFACE FINISH:
TOLERANCES:
LINEAR:
ANGULAR:

FINISH:

DEBUR AND BREAK SHARP EDGES

DO NOT SCALE DRAWING

REVISION

	NAME	SIGNATURE	DATE
DRAWN			
CHK'D			
APPV'D			
MFG			
QA			

MATERIAL:

WEIGHT:

TITLE:

EXPLODED VIEW

DWG NO.

A4

SCALE: 1:10

SHEET 1 OF 1

Working Drawing Exploded

Cost Analysis

Part	Cost (US$)
Base Plate	$2.00
Bowl Bracket	$0.50
Bowl	$1.50
Crank	$2.00
Cutout Bracket	$1.50
Cutout x2	$5.00 X2= $10.00
Dough Roller x2	$2.00 X2= $4.00
Gear Peg	$0.50
Gear	$1.00
Plunger	$0.35
Roller Pegs	$1.50
Syringe holder	$1.25
Syringe	$4.00
Total	$30.10
Cost of assembly	$10.00
Final Cost	$40.00

6. Conclusion

In Conclusion, we thought that our design adequately fulfilled our mission. If we did have the means to produce a working model, we are confident that it would be able to perform to the standard outlined by the design specifications. When we presented in front of the class, we discovered several improvements that we could have made to the design, but for the most part our model was deemed a both attainable and realistic model.

7. Acknowledgements

We would like to acknowledge both our professor Dr. Xinli Wu and both of our Teaching Assistants, Jeremy and Brandon.