Lockheed Martin

Additive Manufacturing

Introduction to Engineering Design
EDGSN 100 Section 001

The Dream Team/Team 1
Matthew Guenter, Matt's Webpage, mcg5347@psu.edu
Sean Heraty, Sean's Webpage, smh6168@psu.edu
Collin Egelhoff, Collin's Webpage, cme5321@psu.edu
Lucy Haubold, Lucy's Webpage, lyh5260@psu.edu

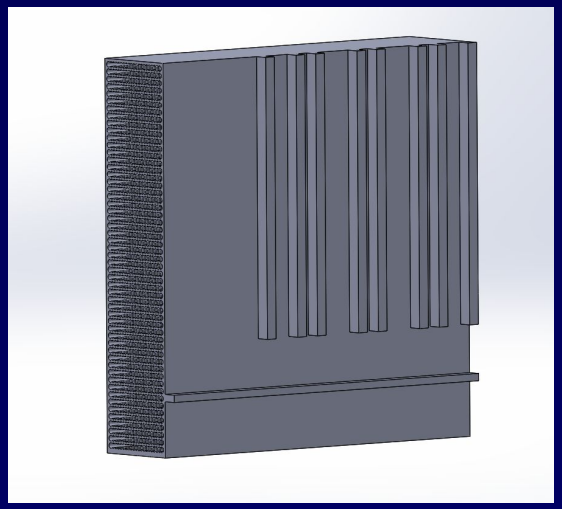

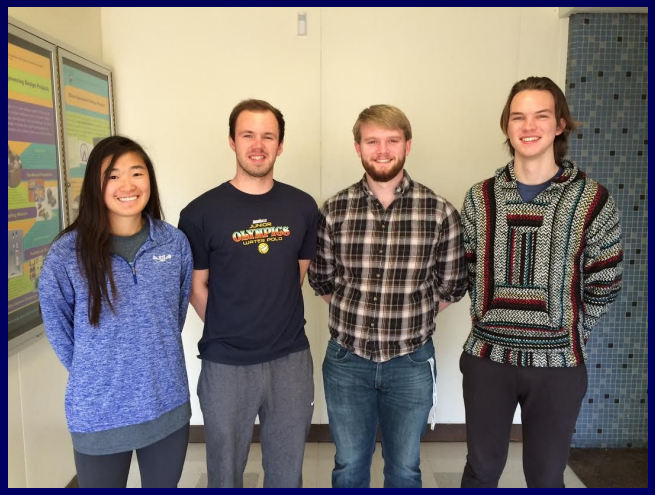

Presented to: Prof. Berezniak
Date: 4/29/2016

Purpose

- **Redesign a heat exchanger for additive manufacturing**
  - Used to cool circuit card Assemblies
- **Use optimal materials with high heat transfer rates**
- **Optimize interior design using thin fin structures**

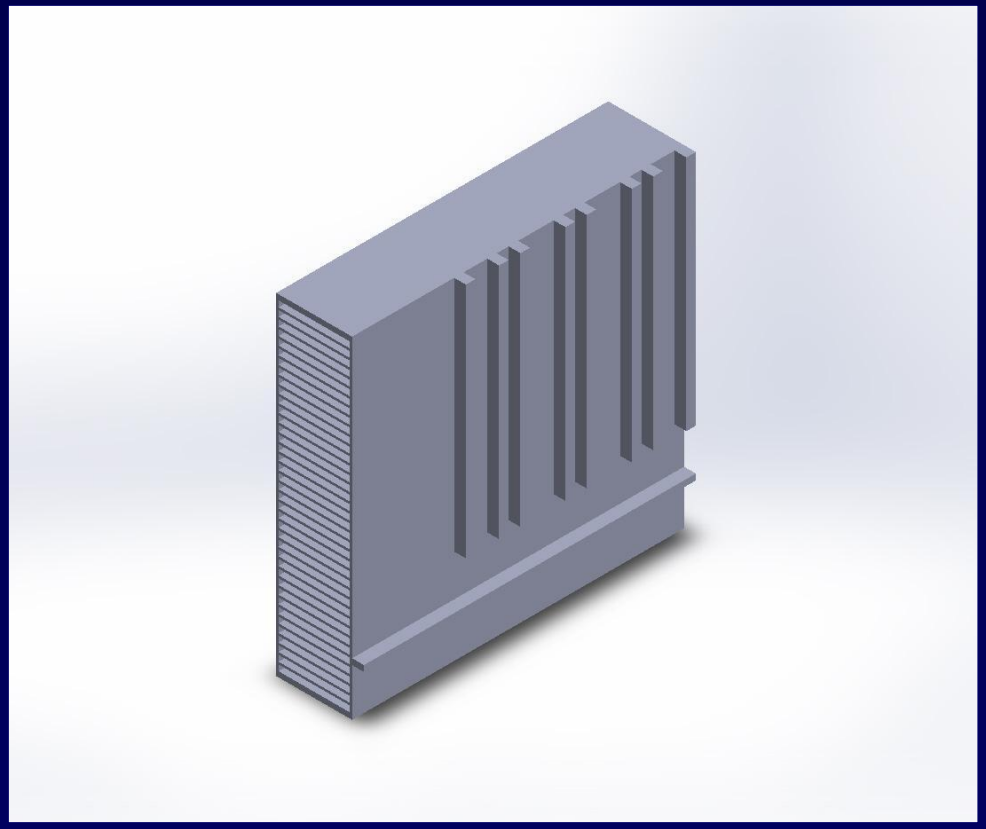

Background

Sponsor

- Lockheed Martin was the sponsor of this year's EDSGN project
- LM is headquartered in Bethesda, Maryland
- Specialize in aerospace, defense, security, and advanced technology
- Employ 126,000 people

LOCKHEED MARTIN

Project Description

- Heat exchangers are used to cool electronic components
- LM asked for a new design that would cool components faster
- Team looked for design with highest heat exchange rate

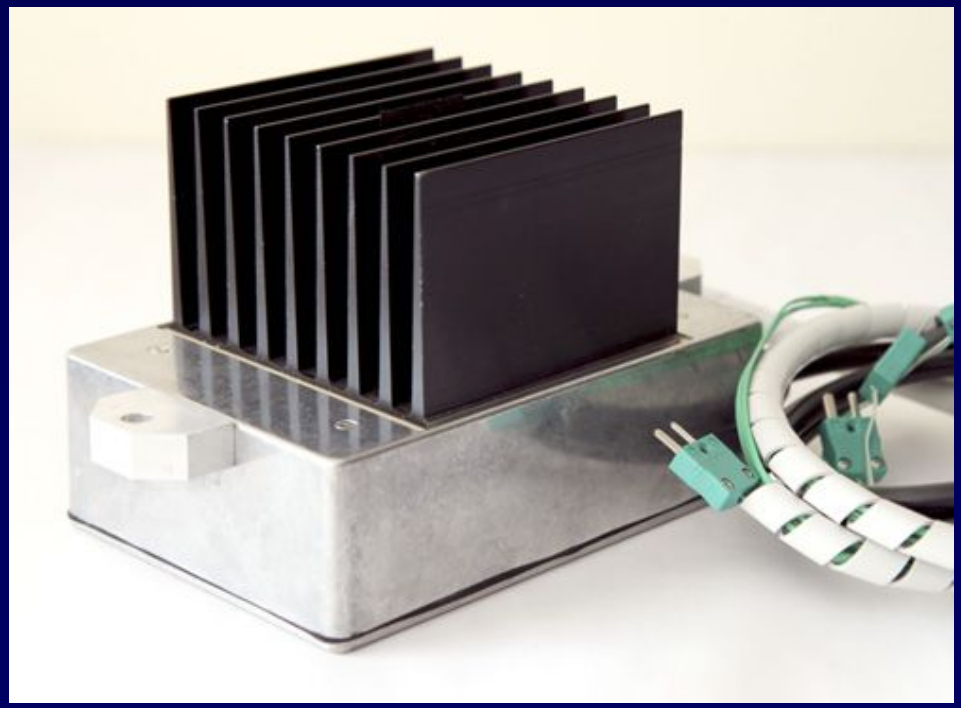

Procedures (1 of 2)

- **Opportunity for improvement by increasing internal surface area**
- **Altered internal geometry to increase heat exchange rate**
  - Overlapping cylinders
- **Designed and tested in Solidworks**
- **A direct correlation was found between the surface area and the heat exchange rate**

$$q = \int_0^L hP(T - T_\infty)\, dx = \int_0^L hP\theta\, dx$$

Procedures (2 of 2)

- **Created ridges on the fins to increase surface area**
- **Made fins thinner to accommodate more fins**
- **Aluminum 1060 was used**
  - Lightweight, cheap, high heat transfer rate

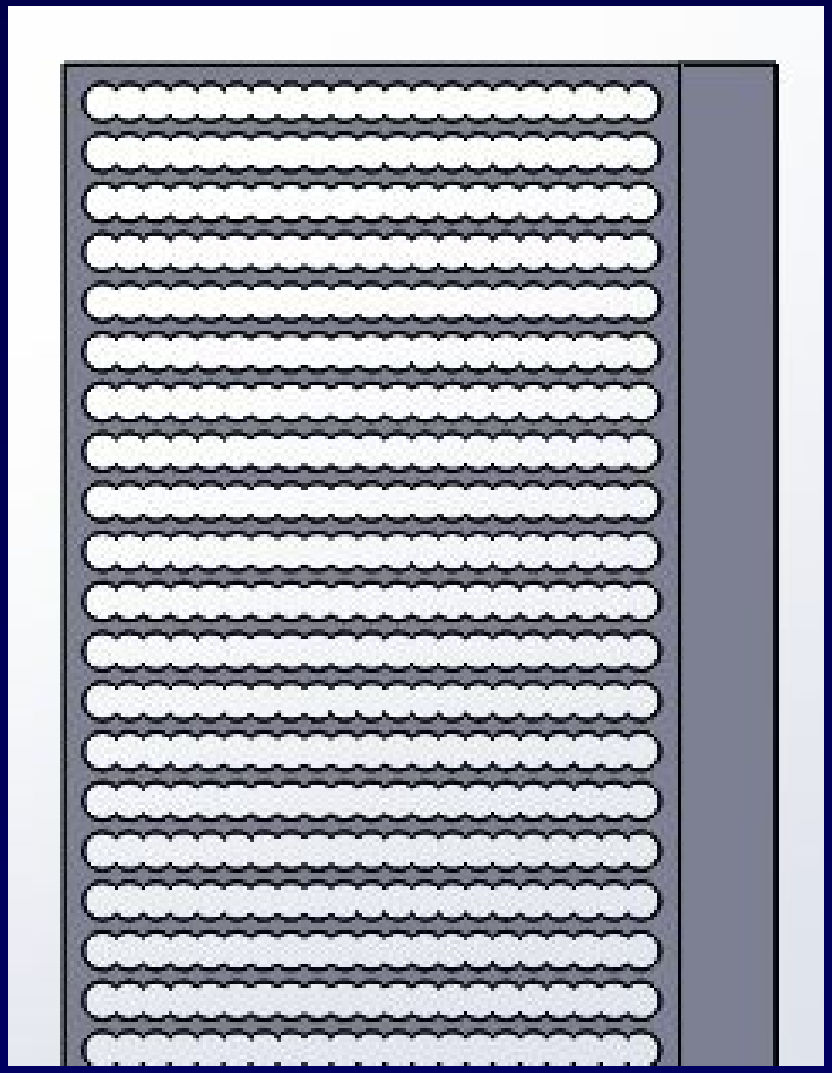

Results and Discussion

- Surface Area increased by 42.38 %
- “eddies”

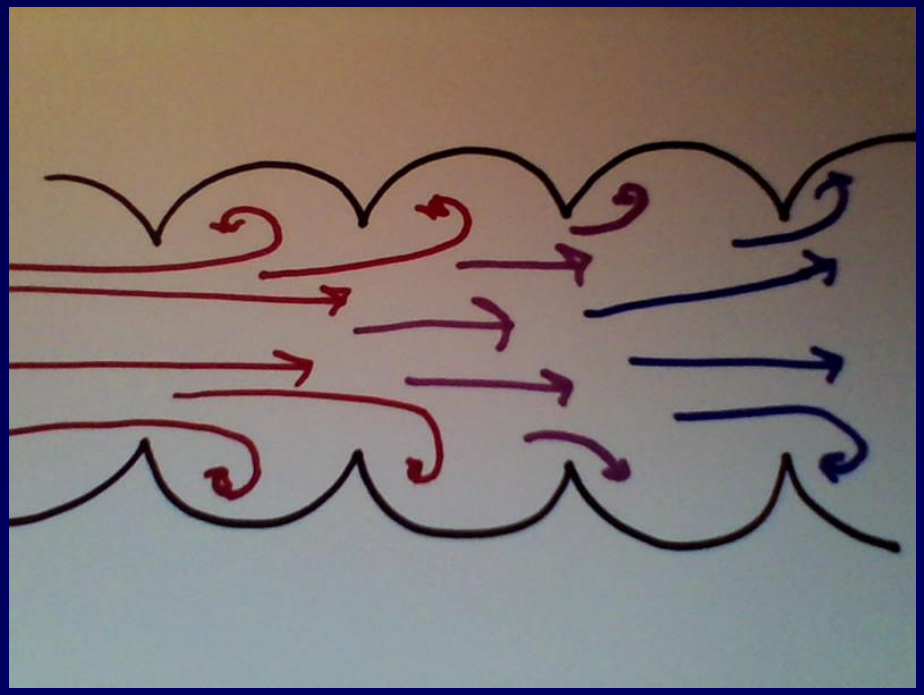

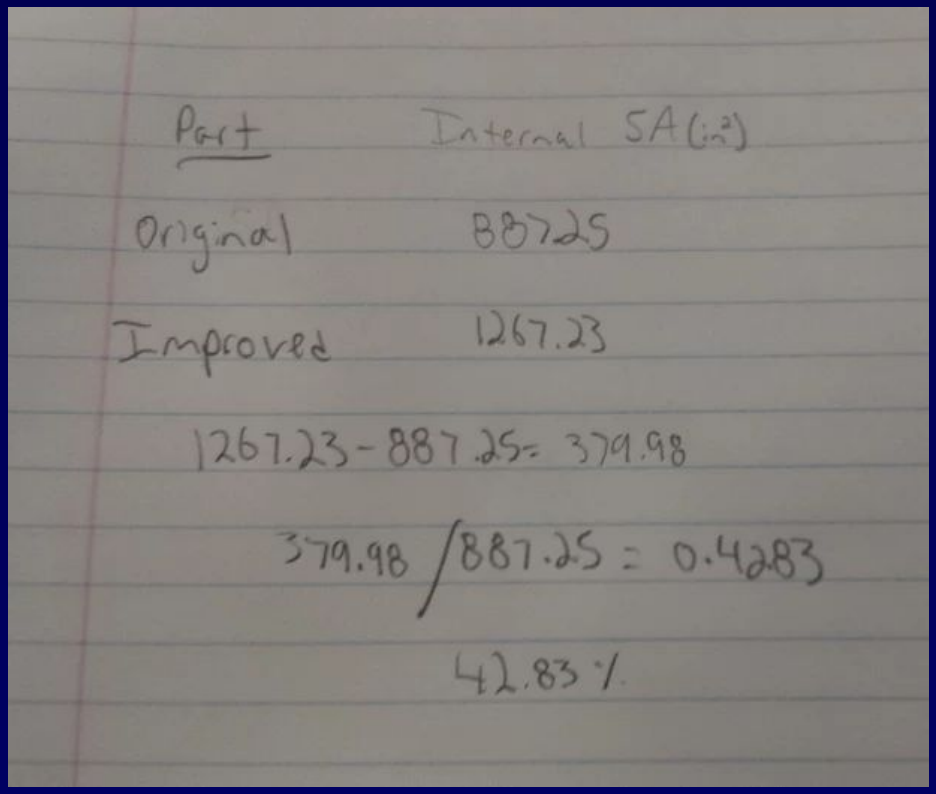

Part	Internal SA (in^2)
Original	887.25
Improved	1267.23

1267.23 - 887.25 = 379.98

379.98 / 887.25 = 0.4283

42.83 %

Conclusions and Recommendations

- Overall goal: increase surface area
- Methods for accomplishing this can vary
- Additive or subtractive?

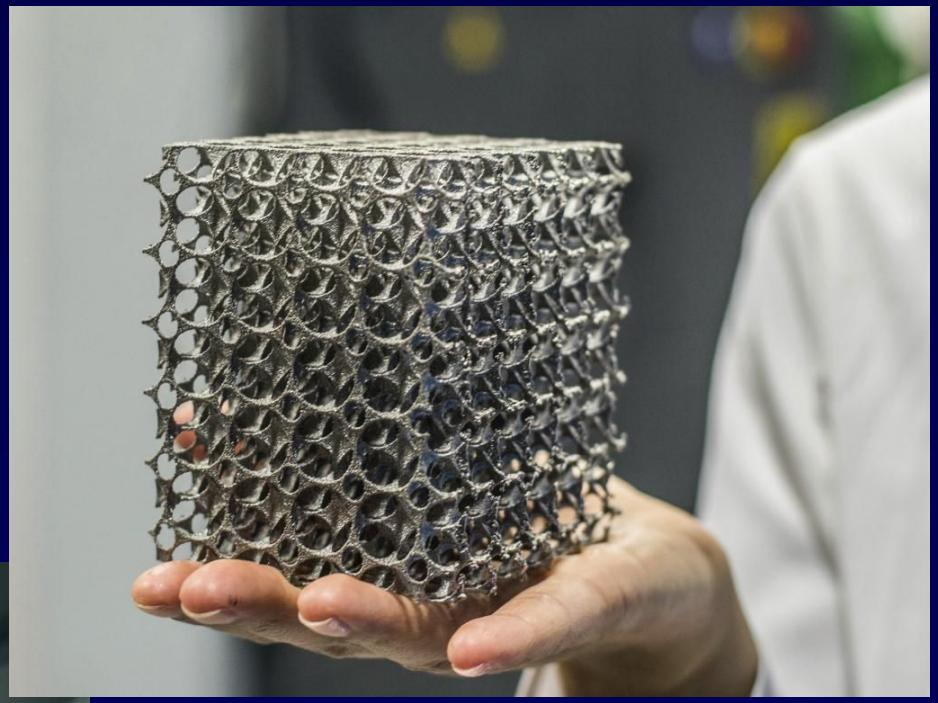

Closing
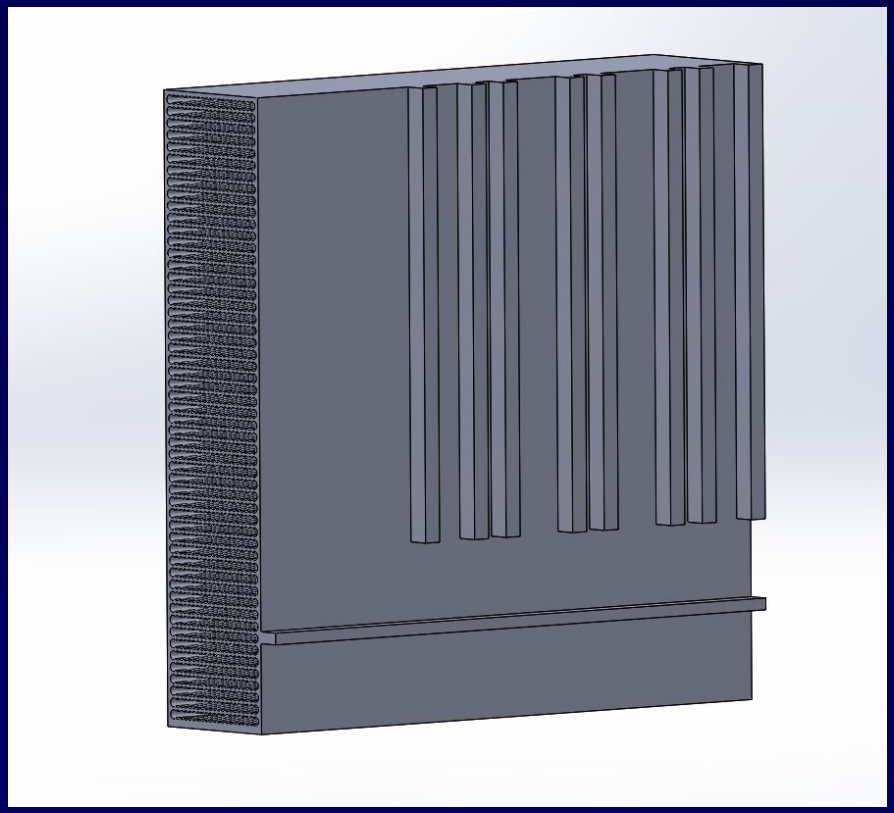
- Contact us with questions
- Thank you!