Technical Memorandum
No. EDSGN100.002

Date: April 25, 2016

To: Lockheed Martin Corporation

From: EDSGN100 Section 002
Team Good Enough
Adilah Nur Aljunid
Adam Bahl
Logan Fries
John Spagnola

Subject: Penn State University
EDSGN 100: Introduction to Engineering Design
Client-Driven Design Project, Spring 2016

Purpose

The purpose of this Memorandum is to improve the design of current technologies in terms of the reduction of weight, cost, and assembly time. The improved designs will go through the process of rapid prototyping by using the desktop additive machinery (i.e. MakerBot). The scope of this memorandum will only cover the problems faced by the users with the Anker USB 3.0 7-Port Hub and discuss only the new features added to the original design in order to make the USB Hub more efficient.

Background

The goal of the project is to redesign a USB Hub Mounting Bracket used as a debug and auxiliary mounting device for a custom avionics mission system. The new USB mounting brackets will provide greater capability for the avionics technician through an increased capacity of connections and allow for installation in various areas on the platform. The primary goal of this project is to reduce the total number of parts for this assembly and provide a vertical installation configuration. In order to achieve this goal, a mounting bracket will be designed that consists of brackets that can be connected via joints. Each bracket will be a single additively constructed piece that can stand alone on a base, also connected via a sliding joint. Ideally this type of design will allow for the utmost simplicity by utilizing the fewest parts. The remainder of the memo will further discuss how the goal was accomplished.

Sponsor

Headquartered in Bethesda, Maryland, Lockheed Martin is a global security and aerospace company that – with the addition of Sikorsky – employs approximately 126,000 people worldwide and is principally engaged in the research, design, development, manufacture, integration and sustainment of advanced technology systems, products and services.

Project Description

Five Project options were given to our group to analyze and ultimately decide which Project to design. Each group member developed their own opinions on the individual Projects, and those opinions were brought to the entire group's knowledge and dissected to reach a final agreement on a Project.

Project #1 and Project #3 failed to strike high interest in our group because of our lack of passion in those individual topics. We sought the Project that we would be most intrigued and passionate about. Projects #1 and #3 did not spark any fire in our group's eyes, thus, we moved to other options.

Of the remaining options provided, the decision to do Project #4 was mainly sparked from our high interest in a real world situation. Going in, we wanted the Project that we could relate to and that we could see ourselves being a part of down the road in our lives. We felt as though there was a connection to the project because, although simple and straightforward, it was a more realistic Project opportunity than the other options. Another contributing factor was the confidence we felt we had in succeeding in this Project. Immediately, we started tossing around ideas and bouncing them back and forth between one another. The Project felt right. In the end, the relationship to the project's overall situation was the backbone to the decision to go with #4.

Project #4 consisted of redesigning a USB Hub Mounting bracket. The USB Hub is used as a debug and auxiliary mounting device for a custom avionics mission system. The goal is for the new USB Hub to provide greater capability to the avionics technician, to reduce the total number of assembly parts, and provide vertical installation configuration. The project consisted of the following work; Designing a bracket for a 7-port USB Hub, designing a bracket for vertical mounting, and designing new cable retention for USB and Power cables.

Procedures

The procedures involved in redesigning the USB Hub bracket are based on the engineering design process which include identifying the problem, defining the criteria needed, researching on the relevant data and information, planning and developing the solutions, and finally building the model by using the additive manufacturing. The first step in identifying the problem involves determining the specific USB Hub that would be used as the prototype. After a thorough discussion and examination, Anker USB 3.0 7-Port Hub was chosen. The problems faced by the users when using this USB Hub include the limited capacity of connections and installation in various areas on the USB Hub. Secondly, the criteria that is needed for the USB Hub consists of the following; the existing bracket for quantity 2, 7-port USB Hubs with cable

retention for USB and Power cables and minimal part count, maintain 4-point, screw mounting for base bracket, minimize any additional screw or mounting holes required in platform structure, a bracket for vertical hub mounting, design a bracket for stacking three Hubs together (horizontal and vertical). The Anker USB 3.0 7-Port Hub has a dimension of 4.3x1.7x0.9in and weight of 2.9oz. This allowed the mounting bracket to be designed due its lightweight and portability. The mounting bracket was designed within 5 hours while the modelling process using Solidworks software took another 5 hours. The model is designed based on 5 different structures, a stand, a pair of brackets (left and right), a stopper plate, and a container. After the process of designing and modelling is done, the model is examined to ensure the dimensioning and tolerance of the bracket suits the Anker USB 3.0 7-Port Hub. Finally, the model of the docking station is converted to a real life size prototype by using additive manufacturing.

Results and Discussion

The printed model was tested to see if it met the design criteria. The t-shaped joints that connected the main bracket with the wall attachment option fit very well (see figure 4). The tolerances of the joints allowed for easy assembly without the feeling of the assembly falling apart on its own. The main bracket also fit exceptionally to the base designed for vertical mounting on a desktop like surface (reference figure 1). The bracket in its entirety can be manipulated into its different functionality options in only seconds which is exactly what was intended. The longest part of the process is screwing the bracket into the desired surface so it can handle more rigorous activity. The new design requires only four screws maximum for either vertical or horizontal mounting unlike the original design (see figure 5). The original design utilized a minimum of four screws at a time and allowed for only one typed of mounting. The new design also allows for several USB hubs to be stacked on top of one another thanks to the interlocking t-joints.

After observing the prototype of the first mounting bracket, a few things could be done differently to make it even easier to work with and more effective. The base designed for vertical mounting has no way to be secured to the table (figure 2). When being used in the field, it will be very bothersome to utilized a USB hub that does not remain in one place. To correct this, one screw hole could be placed on either side of the base to allow the assembly to be mounted to the table just as the side brackets allow it to be mounted to a wall or vertical surface. Additionally, the entire assembly could be manufactured with less material. The prototype is rather bulky. If less material is used, the bracket assembly could be much more space efficient on a desktop.

Conclusions and Recommendations

This design is well suited for the jobs that were part of the design criteria because of its versatility in being able to string as many of the hubs together as desired and it is strong enough to be mounted with only four screws because of the trapezoidal joints. This group feels

that the appropriate measures were taken to ensure the high quality of the design as well as keeping the vision of the company in mind. It was a great honor to cooperate with Lockheed Martin on this project and this group would be willing to lend a hand in other projects as well, should the need arise. If there are any questions about the design, please contact Logan Fries at lvf5173@psu.edu. He will be quite willing to help in any way that he can.

References

https://cms.psu.edu/Spring2/201516SP/201516SPUP___REDSGN100_002/_assoc/B2AEABCA8A664FE7AF9024CC526A47C0/EDSGN100_Updated_Design_Goals___Updated_.pdf

https://cms.psu.edu/Spring2/201516SP/201516SPUP___REDSGN100_002/_assoc/A63B8A57B24142F8BDF4DE81EF3D3C0D/PennState_LM_Project_Listing_v2.pdf

https://cms.psu.edu/Spring2/201516SP/201516SPUP___REDSGN100_002/_assoc/48B24BB04EC1493B9AF629D25C5EF18F/PSU_Freshman_Design_Effort_-_LM_Overview.pdf

Attachments See pages that follow.

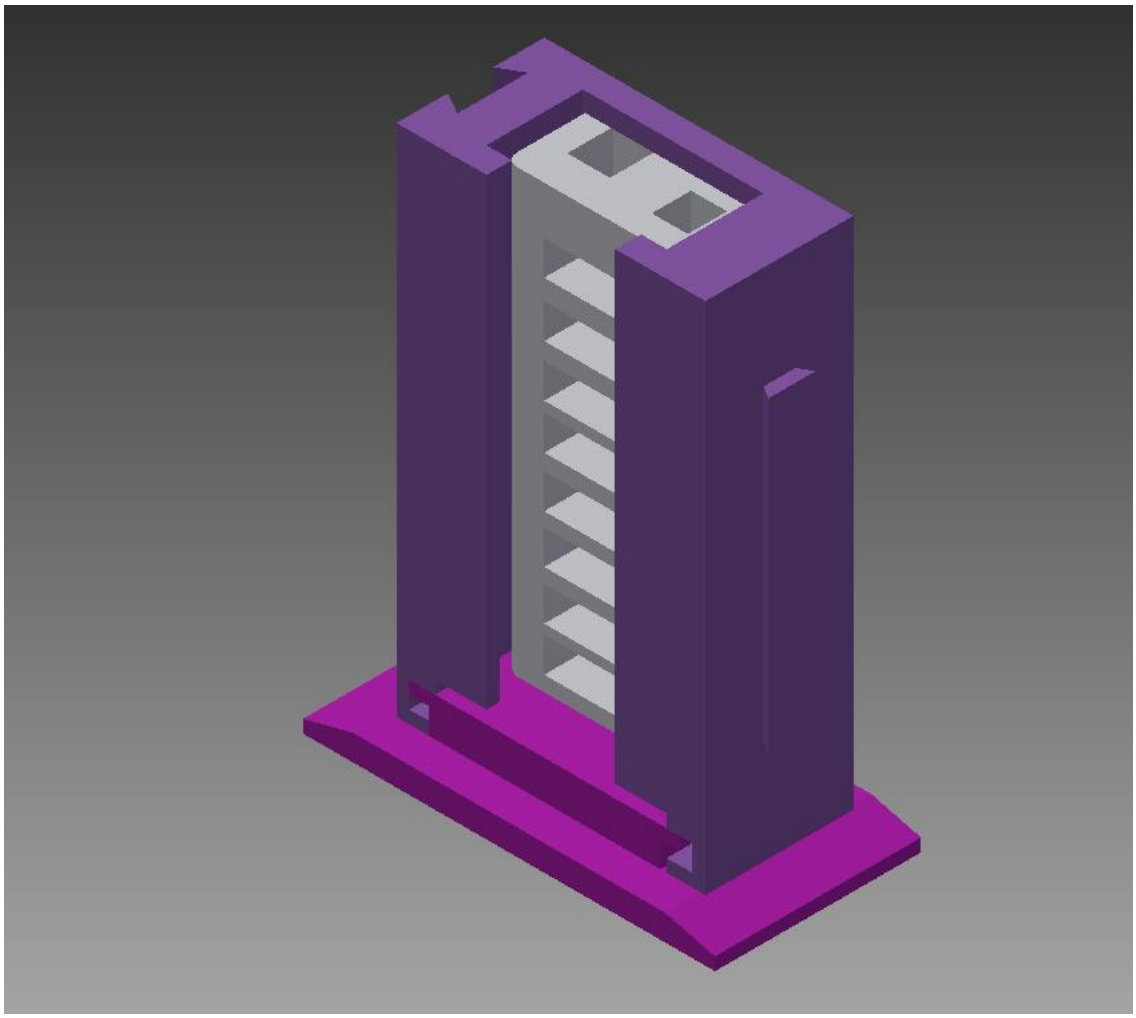

Figure 1. USB hub mounted vertically on base.

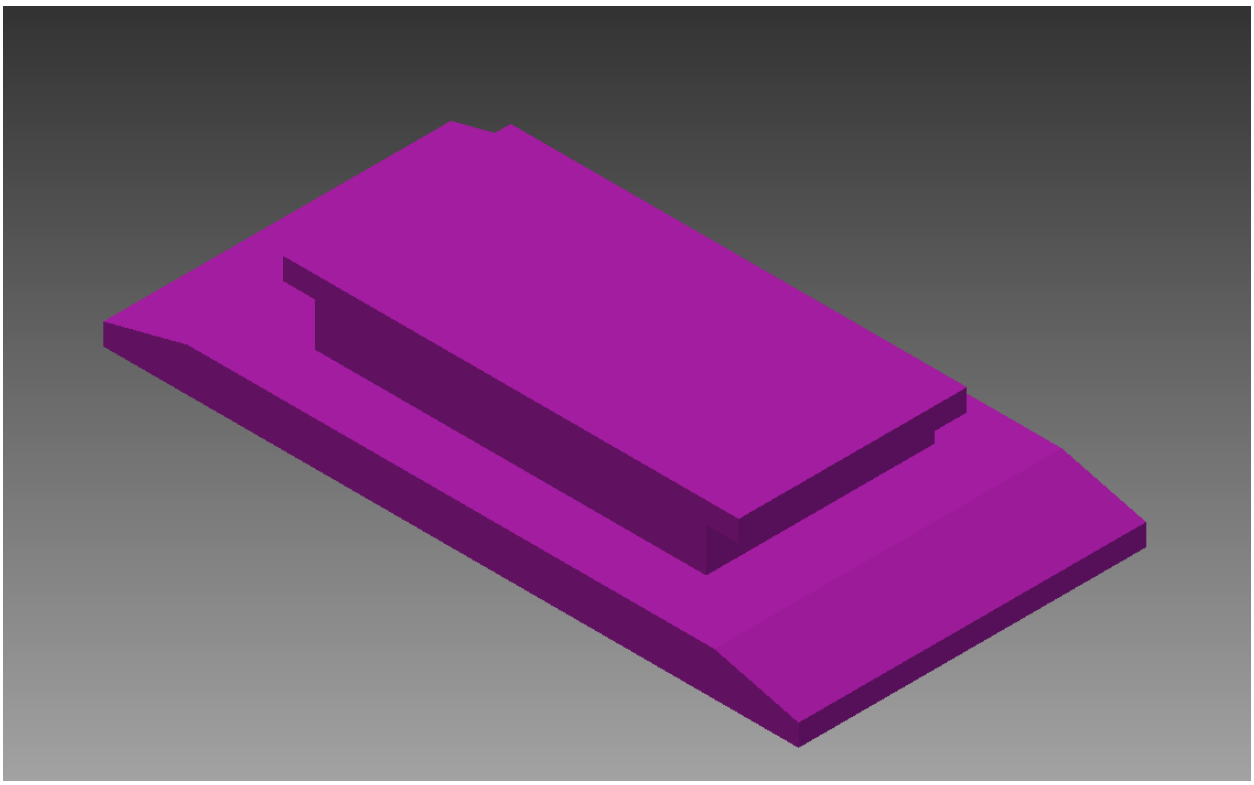

Figure 2. Bracket base that allows for vertical assembly.

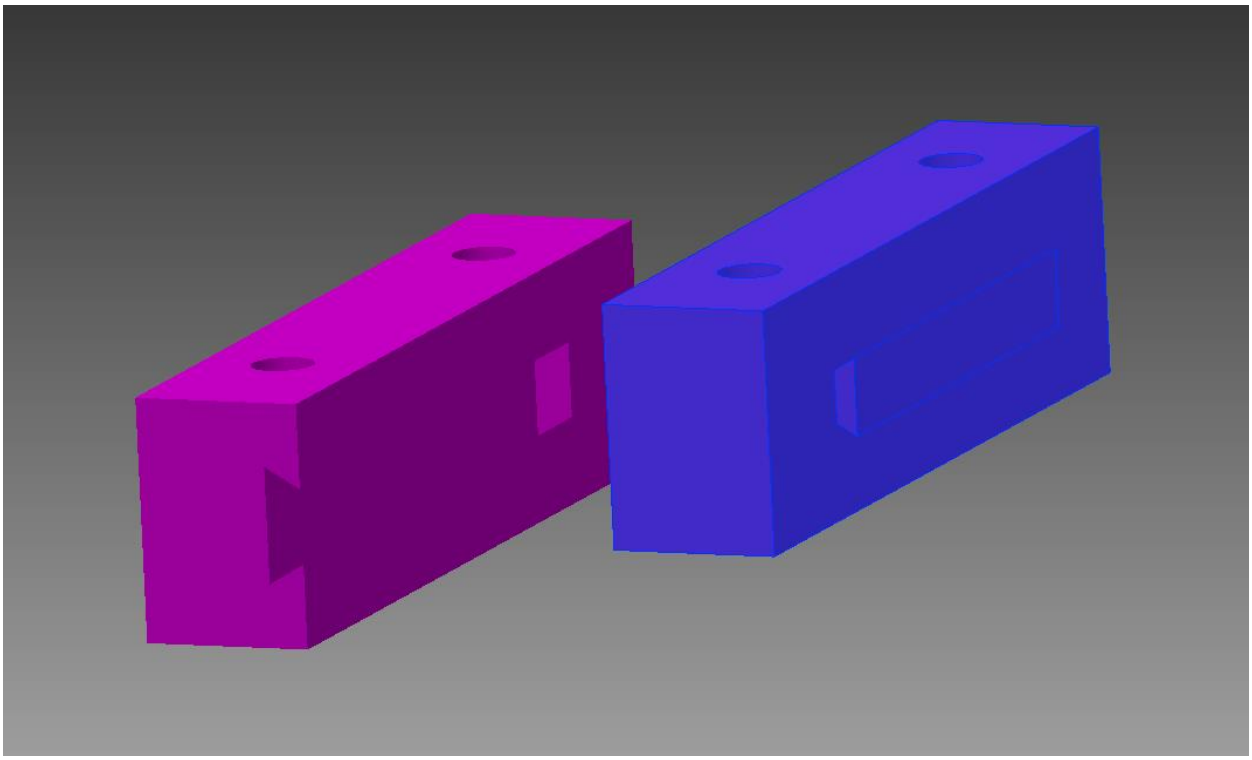

Figure 3. Side brackets with screw holes that allow for mounting on vertical surface such as a wall.

Figure 4. Side view of main bracket, t-joints on either side visible.

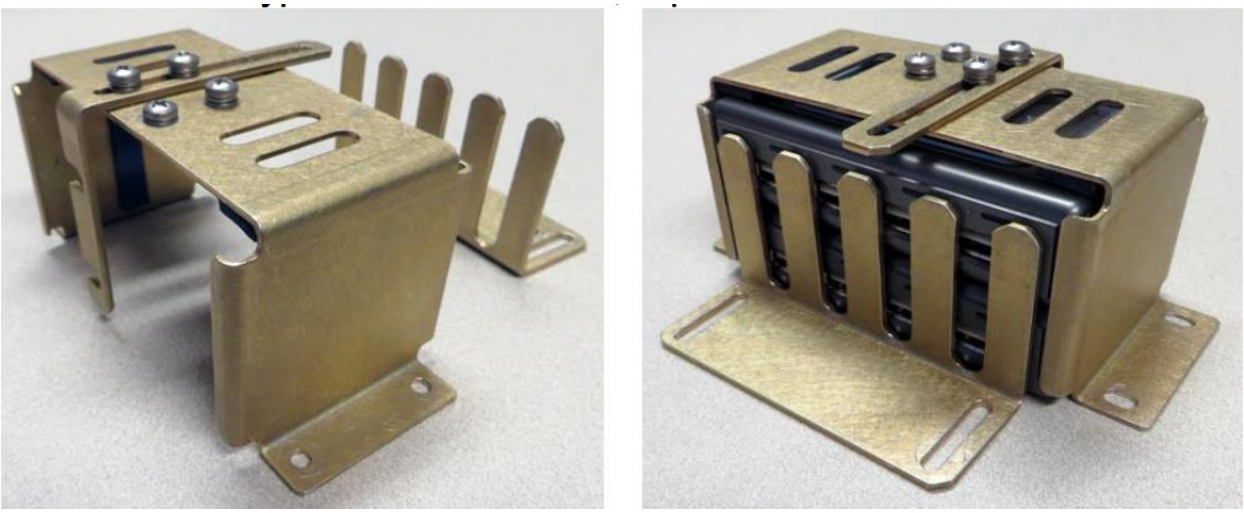

Figure 5. Original mounting bracket.