http://www.personal.psu.edu/lbg5117/edsgn_fa15_section10_team7_dp1.pdf

Introduction to Engineering Design 100

Section 10 Group 7

# Easy Mode

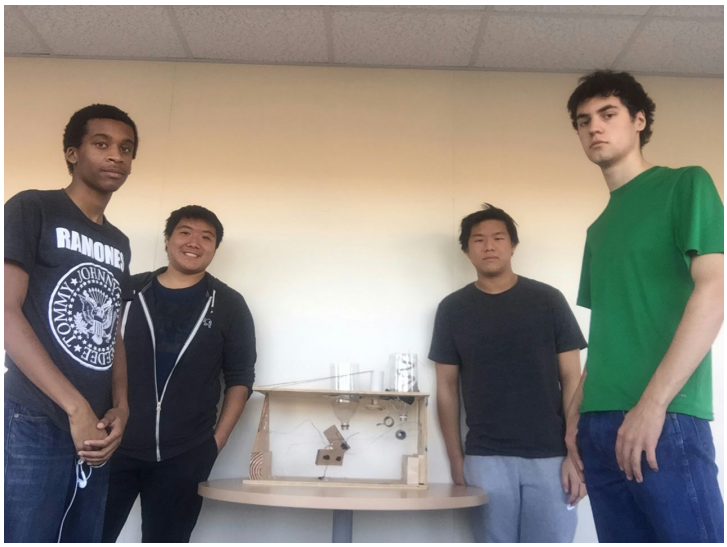


Submitted by: Piyadej Wongsirikul, Brandyn Bard, Wesley Wong, Liam Geleskie

Submitted to Xinli Wu, Ph.D.,P.E.

FALL 2015

# Abstract

Due to high demand for dumpling makers, students of Xinli Wu's Engineering Design class has taken on this challenge to build an efficient, low-cost and user friendly dumpling maker. This dumpling maker has been constructed from the best design in the Gantt Chart in order to fulfill the Customer Needs Assessment.

# Introduction

Dumpling makers allow customers to make their own dumplings more conveniently at a faster rate. Professor Xinli Wu has challenged his class to innovate a dumpling maker that is efficient, low-cost, semi-automatic or automatic and user-friendly. This dumpling maker should be appropriate for home or restaurant use. This report shows the steps that lead to the final design of this dumpling maker. At first, Group 7 started off with many ideas. However, after going through all the requirements and specifications of this dumpling maker project, it can be concluded that group 7 has came up with the most suitable design for this project.

# Table of Contents


| **Topic** | **Page/Author** |
|---|---|
| Abstract | II Piyadej W. |
| Introduction | III Piyadej W. |
| Description of the design task | 1 Piyadej W. |
| ● Problem Statement | |
| ● Mission Statement | |
| ● Design Specifications | |
| Design Approach | |
| ● Gantt Chart | 2 Piyadej W./ Brandyn Bard |
| ● Customer Needs Assessment | 3 Wesley Wong |
| ● Concept generation | 3-4 Wesley Wong |
| ● Design selection matrices | 5-11 Liam Geleskie |
| The final design and its prototype | |
| ● Working drawings of final design | 12 -13Wesley Wong |
| ● Digital image of scale and prototype | 13 Brandyn Bard |
| ● Design features | 14 Wesley Wong |
| ● Operation functions | 14 Wesley Wong |
| Engineering analysis | |
| ● Working mechanism | 14 Wesley Wong |
| ● Cost analysis | 15 Wesley Wong |
| Summary and conclusions | 16 Piyadej W. |
| Acknowledgements | 16 Wesley Wong |

# Description of the design task

**Problem Statement**

The problem statement is to satisfy consumers' need for dumpling production. Making dumplings requires a lot of effort and time; with the help of a dumpling maker, production will be more efficient. This dumpling maker makes the process more efficient and allows owners to produce commercially.

**Mission Statement**

The mission statement is to create a prototype of a dumpling maker that is semi-automatic or automatic and efficient that would cost less than $200 and usable in home and restaurant.

**Design specifications**

1. The dumpling maker must be able to produce at least 10 dumplings per minute.
2. The dumpling maker must be automatic or semi automatic.
3. The cost should be not exceed $200.
4. The dumpling maker should be easy to use, efficient and adaptable for home and restaurant usage.
5. The dumpling maker should be dishwasher safe.

# Design Approach

**Gantt Chart**

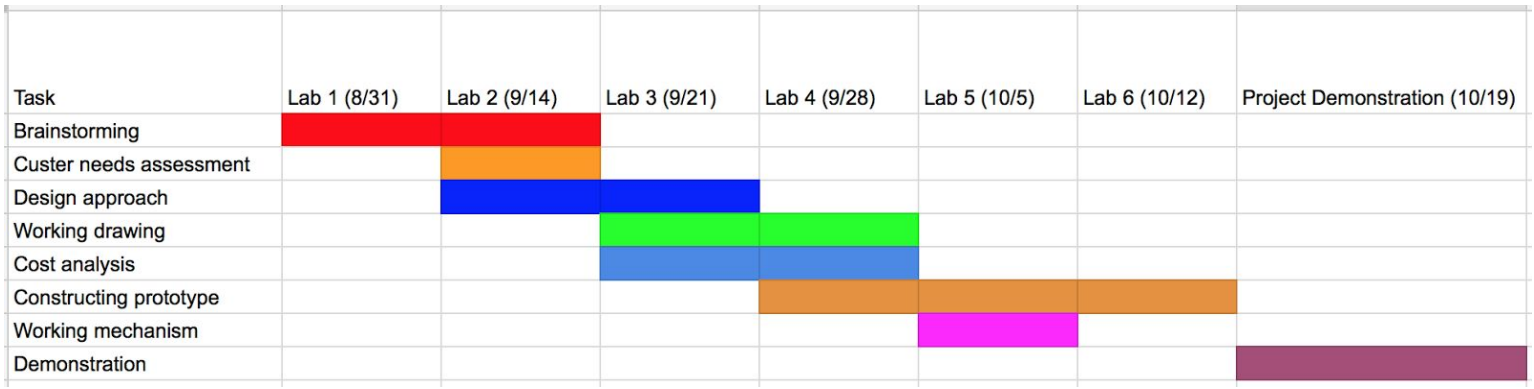


Table 1: Gantt Chart

**Customer needs assessment**

In order to design a dumpling maker that met or exceed the requirements of our target audience, small and medium restaurants, we needed to conduct a market survey. We contacted 5 Chinese restaurants in Boise, Idaho and asked them a series of questions in order to determine what they felt were priorities. These questions were asked to the owners of various Chinese Restaurants:

1. Do you currently sell dumplings in your restaurant?
2. How many dumplings do you sell on a busy day?
3. How much time does it take for you or your staff to make those?
4. How much space would to expect an automatic dumpling maker to take?
5. What is the price range expected for an automatic dumpling maker.

When conducted the survey, we experience a couple of language barriers but were able to get the overall picture on priorities. In general, a store that sells dumplings require a machine that can make around 200-300 dumplings a day in about 2 hours. Most said that the dumpling maker itself should be no larger than 4 ft. by 4 by 3ft and would be expected to cost around 300 to 500 dollars.

**Concept Generation**

Our design focused on the efficiencies of modern day food product manufacturing process. We tried to make as many motions passively controlled to reduce power consumption,

complexity, and cost. Another influential aspect was limiting the cost to $200. Not only was that important to the design criteria, but also crucial to actual viability for the dumpling maker. Inspired by the design for the poptart food processing plant, we decided to make a conveyor system that would passively fold the dumplings. After creating multiple designs, we narrowed down the ones the we felt addressed the challenged most efficiently.

## Working Drawings and Models

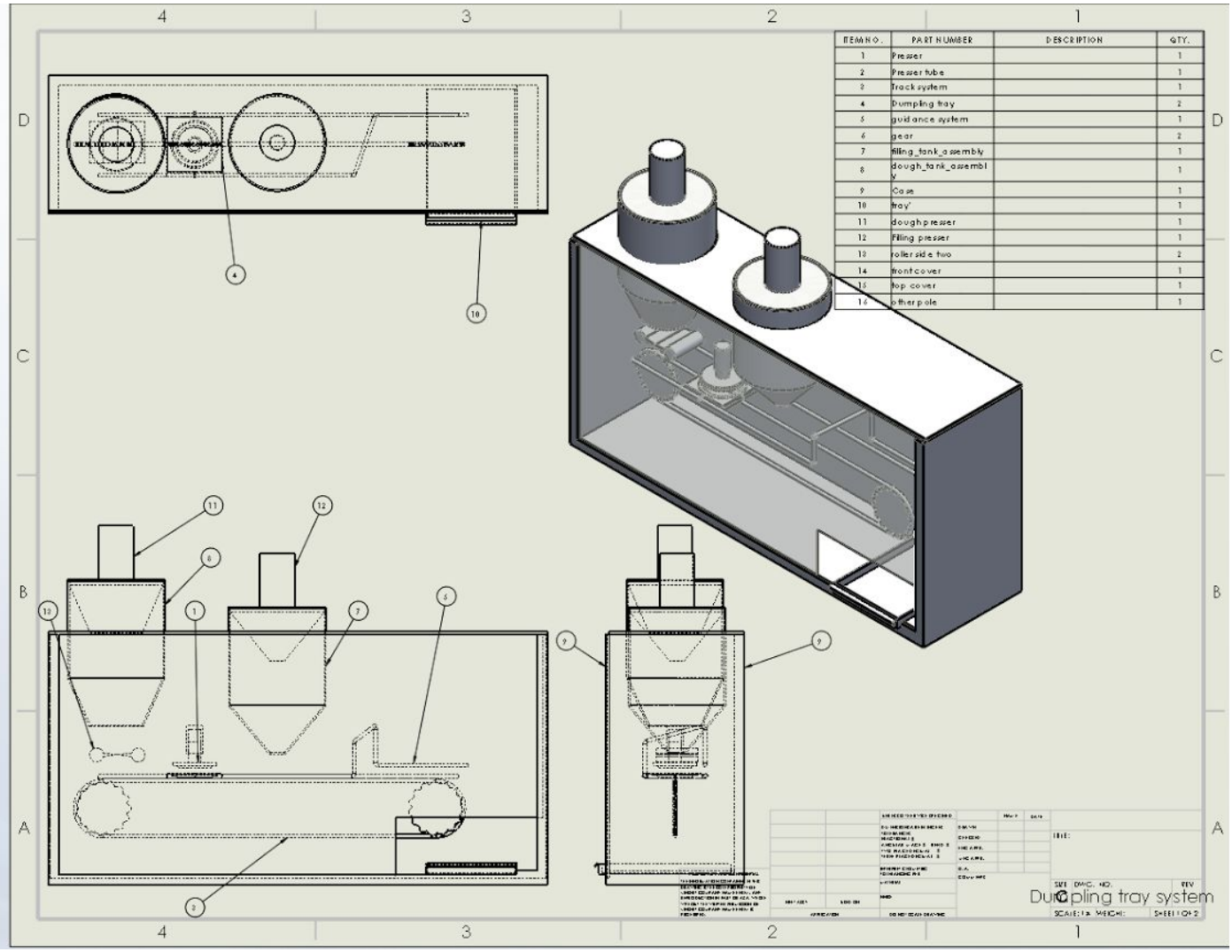


Drawing 1: Full Assembly

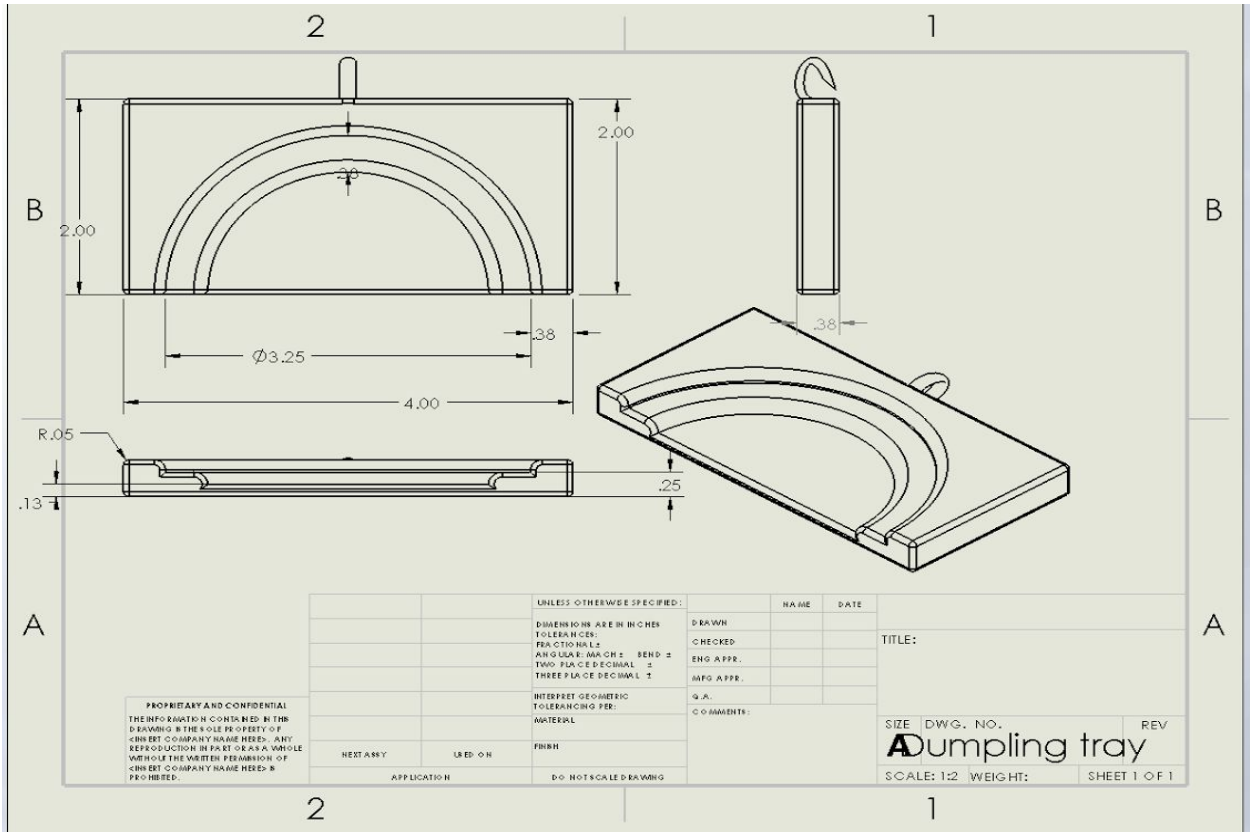


Drawing 2: Dumpling Tray

**Digital Image of Prototype**

**Design Features**

Our dumpling maker features a minimalistic, yet robust and efficient system to automatically create dumplings at a rate of over 10 per minute. A modular reservoir system allows the consumer to either mix the dough and filling independently or have the machine mix them. A conveyor of individual dumpling molds allow for higher efficiency as well as simplicity in cleaning and maintenance. Dough is dropped into the indentation of the trays, flattened by a piston, and filling is dropped into the center. A guide rail system allows for the folding of the dumplings using passive manipulation. The entire machine is encased in a box with a removable cover as well as a plastic front cover that simply slides in and out of notches.

**Operation Instructions**

The user places dough in the left-most reservoir and dumpling filling in the right-most reservoir. After placing the covers on the reservoirs and placing the receiving tray into its slot, the user simply plugs in the dumpling maker and turns on the power. The tray holds about 25-30 dumplings, so the user should replace the tray every 2 to 3 minutes.

**Cleaning Instructions**

The top and front covers are removable, allowing easy access to all the internal workings of the dumpling maker. Users should detach the reservoirs and their internal modules to clean after every use. The dumpling trays detach from the rails and can be simply thrown into the dishwasher. Wiping down the surfaces of the dough press is recommend, but not required. All mechanical portions such as the rails, conveyor, and gears should require cleaning and greasing no more than once every 6 months.

**Working Mechanism**

Each reservoir has two modular attachments that allow it to either mix filling/dough or depress a plunger to move filling/dough downward toward the dumpling molds. As the dough exits an opening at the bottom of the reservoir, a cutter ensures that a consistent amount of dough is being dumped into the dumpling molds. The dumpling molds move along a conveyor, with one side hooked to a guide rail. A plunger depressed by an electric piston flattens the dough to match the form of the mold. Filling is pressed from the reservoir to the dough covered mold into the inner indentation. As the mold travels along the track, one side is forced to fold over and pressed tightly against the other side of the mold. The mold is then allowed to fall open at the end of track so that it deposits the dumpling into the holding tray. The process repeats itself indefinitely as each mold is brought back to the start to be filled with dough.

**Cost Analysis**

| Part | Quantity | Cost Total |
|---|---|---|
| Motor | 1 | $60.00 |
| Trays | 1 | $1.06 |
| Assorted Mechanical Pieces | Various | $50.00 |
| Reservoirs | 2 | $50.00 |
| Case | 1 | $10.00 |
| Depressors | 3 | $25.00 |
| | Estimated Cost Per Unit | $196.06 |

Table 5: Cost analysis

The current design meets the design criteria budget with some air for error. As production increases, economies of scale should reduce average cost per unit.

## Summary & Conclusion

Through careful selections, brainstorming and analysis of each idea, a final design "Easy Mode" has been made to fulfill the need of the consumers. The final design started off from a group discussion where each member would present their ideas. The best design from each part is then combined together to create a dumpling maker that follows the design specification given, judging from the results of the design selection matrices. The design of the dumpling maker was also influenced by the Customer needs assessment, which was very helpful by telling the group what the consumers expect in a dumpling maker. The characteristics that play an important role are creativity, dedication, time management and cooperation. Each member has to listen to one another, go to all group meetings and put in their best effort.

Without the support of Professor Xinli Wu and Nick, our project would not have been accomplished. We would like to thank them for introducing us to this project, where each individual members learn how to work co-operatively and listen to each other ideas, which are the most important factors to a successful group work. The entire process of this group project is perfectly planned out, and each single step contributes to the final result .Many lessons that we learned throughout the process can be adapt and use in our career in the future.

## Acknowledgements

Thank you Golden Wok, Sakura Sushi, Bamboo Garden 1 and 2, Wok Time for answering taking time and answering the consumer surveys.