EDSGN 100

Folding Shopping Cart

Section #202 Team # 8

Fig. 1- Team Picture (from left to right) Walker Temperton, Alex Emerich, Kyle Schwartz.

Submitted by:

Kyle Schwartz -- Alex Emerich -- Walker Temperton

Submitted to: Xinli Wu, Ph.D., P.E.

Summer 2011

Table of Contents

- **Cover Page……(Kyle)**
- **Abstract……(Kyle)**
- **Introduction……(Kyle)**
- **Description of Design Task**
  - **Problem Statement……(Kyle)**
  - **Mission Statement……(Walker/Alex)**
- **Design Approach……(Team)**
- **The Final Design/ Prototype……(Kyle)**
- **Engineering Analysis……(Kyle)**
- **Summary and Conclusions……(Kyle)**

Abstract

Our team set out to design an easy to use shopping cart that could fold to a minimal size for easy storage. We heavily emphasized portability, without sacrificing strength or adding too much weight. This resulted in a simple design that met our design goals.

Introduction

In the ever expanding urban world, many people live completely without personal transportation, making it extremely difficult to transport larger objects, including groceries. Our goal was to design a folding cart with the ability to hold large amounts of cargo, while still being lightweight, portable, and cost-efficient.

Description of the Design Task

Problem Statement:

People without cars or other modes of personal transportation do not have the ability to carry many items, like groceries, long distances.

Mission Statement:

Our mission is to create a folding shopping cart that is able to bear heavy loads, while still being lightweight and easily storable, be easy to use, be ideal for transporting groceries, have a weight capacity of over 100 lbs, and less than $50 to manufacture.

Design Specifications:

The group was required to design a folding shopping cart that met the following specifications:

- Should be easy to use.
- Should be ideal for transporting groceries and some other materials.
- Should fold compactly for easy storage.
- Material cost should not exceed $50 unless it can be justified.
- Should have a weight capacity of 100 pounds

Design Approach

Gantt Chart:

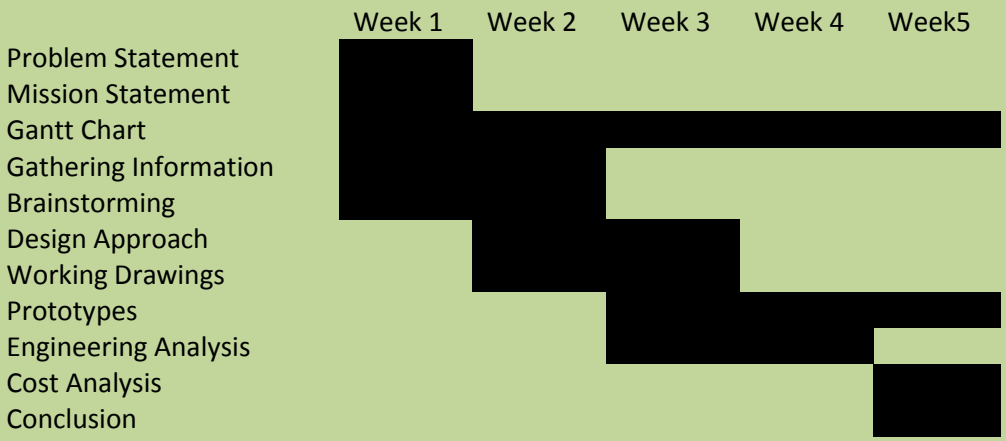

Chart 1- Gantt chart showing our work schedule.

Customer Needs Assessment (Important Features Based on Consumer Feedback):

- **Inexpensive**
- **Strong**
- **Able to fit in a car**
- **Lightweight**
- **Easy to Collapse**
- **Grips on handle**
- **Easy to maneuver**
- **Durable**
- **Portable**

Concept Generation:

Concepts				
Push Cart	Canvas	(Reference)Wire Base	Metal Plate	Four Wheeled
0	-	0	0	0
0	+	0	-	-
0	+	0	0	+
0	+	0	0	0
0	0	0	+	-
0	-	0	+	0
0	+	0	0	-
0	+	0	-	+
0	5	0	2	2
0	1	0	4	3
0	2	0	2	3
0	3	0	0	-1
4	1	2	3	5
No	Yes	Yes	Yes	No

Selection Criteria	Weight	Concepts					
		(reference) Canvas		Wire Base		Metal Plate	
		Rating	Weighted Score	Rating	Weighted Score	Rating	Weighted Score
Durability	5%	3	0.15	4	0.2	4	0.2
Affordability	10	3	0.3	2	0.2	2	0.2
Portability	20	3	0.6	3	0.6	3	0.6
Ease of Storage	10	3	0.3	2	0.2	3	0.3
Ease of Manufacturing	5	3	0.15	3	0.15	3	0.15
Strength	20	3	0.6	4	0.8	4	0.8
Material Cost	15	3	0.45	3	0.45	3	0.45
Weight	15	3	0.45	2	0.3	2	0.3
Total Score			3		2.9		3
Rank			1		3		1
Continue?			Combine		No		Combine

Working Drawing

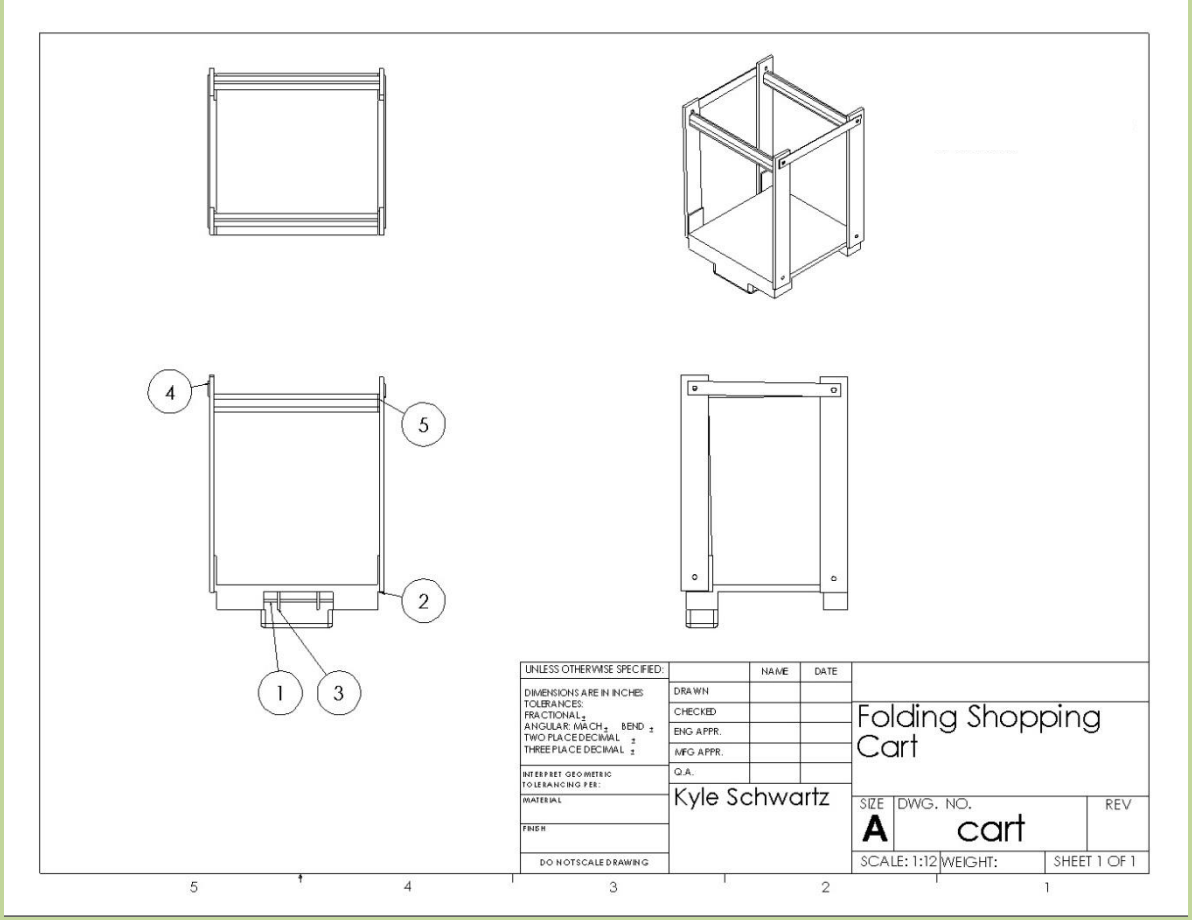

Images of Prototype

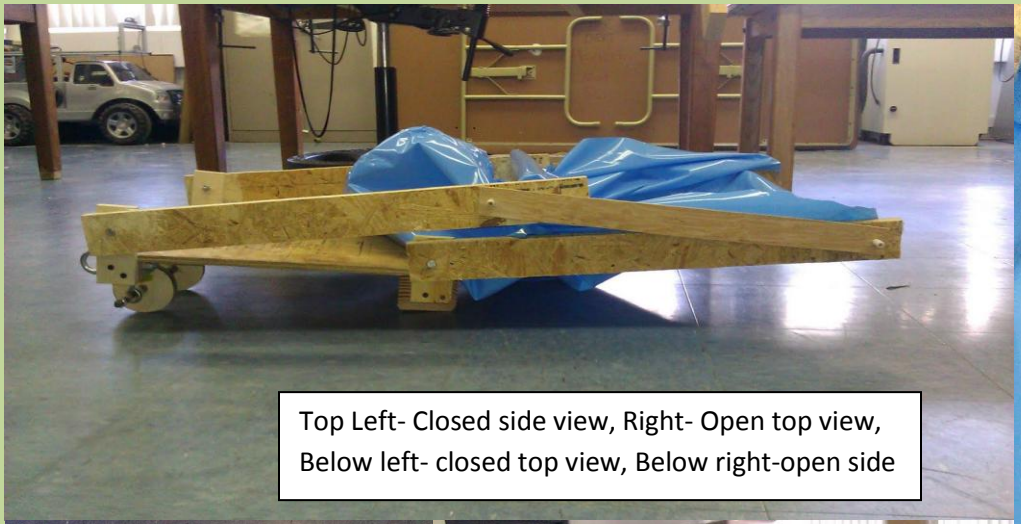

Top Left- Closed side view, Right- Open top view,
Below left- closed top view, Below right-open side

Design Features

- Sturdy bottom piece for extra support and structure
- Two wheels and a stopper, cheap and easy to maneuver
- Folds down while still being able to roll

Operation Instructions

To Open:

- **Simply pull on the top handle to unfold the cart**

To Close:

- **Push the handlebar down**

Engineering Analysis

The Working Mechanism:

Our cart's main feature, its ability to be compact, comes from pins that allow the stands to pivot and fold in on themselves. The handle can then be held as the folded cart is rolled behind the user.

Cost Analysis

Our group heavily emphasized having a low material cost. The wooden frame allows for the cart to remain sturdy and cheap at the same time.

Object	Quantity	Price of Individual	Total
Wooden Planks	5	0.74	3.7
Wood Screws	10	0.43	4.3
Steel Rod (Axel)	1	0.98	0.98
Canvas Bag	1	4.93	4.93
Total			13.91

Conclusion

It was brought to our attention the need for a way to transport things, such as groceries, to or from apartments, stores, or dorm rooms. The design process began with asking ourselves what we would want in a shopping cart. We each thought of a few designs for our final design and then used a design matrix to weigh the pros and cons of each design. The final design is a combination of two of our previous designs.

The simple folding design of our cart allows for it to be easy to store, and simple enough for anyone to use. The design is also extremely cost efficient, at a materials cost of only $13.91, so this cart is affordable on any budget, with a projected retail at around $20. While this cart may not have as many features as other carts, it offers the necessities at an incredible price, with easy storage options.

Acknowledgments

Team 8 would like to thank Xinli Wu, Ph.D., P.E., for the opportunity to work in a real engineering environment with complete creative control.